JOINT FLEET MAINTENANCE MANUAL

VOLUME V

QUALITY MAINTENANCE

LIST OF EFFECTIVE PAGES

Page Numbers	Change in Effect	Page Numbers	Change in Effect
i thru xxvi	Change 4	V-I-1-9	Change 3
V-I-FWD-1 thru V-I-FWD-4	Change 4	V-I-1-10 thru V-I-1-12	Change 1
V-I-FWD-5 thru V-I-FWD-6	Change 2	V-I-1-13	Change 3
V-I-FWD-A-1	Change 4	V-I-1-14	Change 1
V-I-FWD-A-2 thru V-I-FWD-A-4	Change 3	V-I-1-15 thru V-I-1-19	Change 3
V-I-FWD-B-1	REV B	V-I-1-20 thru V-I-1-24	Change 1
V-I-FWD-B-2	Change 4	V-I-1-25 thru V-I-1-27	Change 3
V-I-FWD-B-3 thru V-I-FWD-B-5	REV B	V-I-1-28	Change 1
V-I-FWD-B-6	Change 3	V-I-2-1 thru V-I-2-2	REV B
V-I-FWD-B-7	Change 4	V-I-2-3 thru V-I-2-4	Change 3
V-I-FWD-B-8 thru V-I-FWD-B-15	Change 3	V-I-2-5	Change 4
V-I-FWD-B-16	REV B	V-I-2-6 thru V-I-2-12	Change 3
V-I-FWD-B-17	Change 1	V-I-2-13 thru V-I-2-14	Change 4
V-I-FWD-B-18	REV B	V-I-2-15 thru V-I-2-20	Change 3
V-I-FWD-B-19 thru V-I-FWD-B-20	Change 3	V-I-2A-1 thru V-I-2A-2	REV B
V-I-1-1	Change 3	V-I-2B-1	Change 2
V-I-1-2	REV B	V-I-2B-2	REV B
V-I-1-3 thru V-I-1-4	Change 1	V-I-2C-1 thru V-I-2C-2	REV B
V-I-1-5	Change 2	V-I-2D-1 thru V-I-2D-2	Change 4
V-I-1-6	Change 3	V-I-3-1	Change 4
V-I-1-7	Change 1	V-I-3-2	Change 2
V-I-1-8	Change 2	V-I-3-3 thru V-I-3-4	Change 3

Page Numbers	Change in Effect
V-I-3-5	Change 4
V-I-3-6	Change 3
V-I-3A-1 thru V-I-3A-4	REV B
V-I-3A-5 thru V-I-3A-6	Change 4
V-I-3B-1 thru V-I-3B-4	REV B
V-I-3C-1 thru V-I-3C-2	REV B
V-I-4-1 thru V-I-4-3	REV B
V-I-4-4	Change 2
V-I-4-5 thru V-I-4-10	REV B
V-I-5-1 thru V-I-5-3	Change 4
V-I-5-4	REV B
V-I-5-5 thru V-I-5-7	Change 2
V-I-5-8	REV B
V-I-5-9	Change 1
V-I-5-10 thru V-I-5-12	REV B
V-I-5-13	Change 2
V-I-5-14 thru V-I-5-16	REV B
V-I-5-17	Change 2
V-I-5-18	REV B
V-I-5-19 thru V-I-5-21	Change 2
V-I-5-22 thru V-I-5-23	Change 3
V-I-5-24 thru V-I-5-30	REV B
V-I-5-31 thru V-I-5-32	Change 3
V-I-5-33 thru V-I-5-43	Change 4
V-I-5-44	REV B
V-I-5-45	Change 3
V-I-5-46 thru V-I-5-47	Change 2
V-I-5-48	Change 3
V-I-5-49	Change 4

Page Numbers	Change in Effect
V-I-5-50 thru V-I-5-54	Change 3
V-I-5-55	Change 4
V-I-5-56 thru V-I-5-61	Change 3
V-I-5-62	Change 4
V-I-5A-1 thru V-I-5A-4	REV B
V-I-5B-1 thru V-I-5B-2	REV B
V-I-5C-1 thru V-I-5C-2	REV B
V-I-5D-1thru V-I-5D-2	Change 3
V-I-5E-1thru V-I-5E-2	Change 3
V-I-5F-1thru V-I-5F-2	Change 3
V-I-5G-1 thru V-I-5G-2	Change 3
V-I-5H-1 thru V-I-5H-2	Change 3
V-I-5I-1 thru V-I-5I-2	Change 3
V-I-6-1 thru V-I-6-3	Change 2
V-I-6-4 thru V-I-6-7	Change 1
V-I-6-8 thru V-I-6-12	Change 2
V-I-6-13	Change 1
V-I-6-14	Change 2
V-I-6-15 thru V-I-6-16	Change 1
V-I-6-17	Change 2
V-I-6-18 thru V-I-6-19	Change 1
V-I-6-20	Change 2
V-I-6-21 thru V-I-6-23	Change 1
V-I-6-24 thru V-I-6-28	Change 3
V-I-7-1 thru V-I-7-2	Change 3
V-I -7-3	REV B
V-I-7-4 thru V-I-7-11	Change 3
V-I-7-12 thru V-I-7-13	Change 4
V-I-7-14	Change 3

Page Numbers	Change in Effect
V-I-7A-1 thru V-I-7A-4	REV B
V-I-7B-1	Change 3
V-I-7B-2	Change 4
V-I-7B-3 thru V-I-7B-5	Change 3
V-I-7B-6 thru V-I-7B-10	Change 4
V-I-7B-11 thru V-I-7B-12	Change 3
V-I-7C-1 thru V-I-7C-2	Change 3
V-I-8-1 thru V-I-8-16	Change 4
V-I-8A-1 thru V-I-8A-4	Change 2
V-I-8B-1 thru V-I-8B-2	Change 2
V-I-9-1	Change 3
V-I-9-2	Change 2
V-I-9-3 thru V-I-9-10	Change 4
V-I-9A-1	Change 3
V-I-9A-2	REV B
V-I-9B-1 thru V-I-9B-2	REV B
V-I-9C-1 thru V-I-9C-2	REV B
V-I-9D-1	Change 3
V-I-9D-2	REV B
V-I-10-1 thru V-I-10-2	REV B
V-I-10-3 thru V-I-10-4	Change 2
V-I-10-5	Change 3
V-I-10-6 thru V-I-10-9	Change 4
V-I-10-10	REV B
V-I-11-1 thru V-I-11-2	Change 4
V-I-11-3 thru V-I-11-4	REV B
V-I-11-5	Change 3

Page Numbers	Change in Effect
V-I-11-6 thru V-I-11-8	Change 4
V-I-11-9 thru V-I-11-10	REV B
V-I-11-11 thru V-I-11-17	Change 3
V-I-11-18 thru V-I-11-22	REV B
V-I-11-23	Change 2
V-I-11-24	REV B
V-I-11-25 thru V-I-11-27	Change 2
V-I-11-28 thru V-I-11-32	Change 4
V-I-11-33 thru V-I-11-34	REV B
V-I-11-35	Change 4
V-I-11-36 thru V-I-11-38	REV B
V-I-11-39	Change 1
V-I-11-40	Change 3
V-I-11-41	Change 4
V-I-11-42	REV B
V-I-11-43	Change 4
V-I-11-44 thru V-I-11-53	REV B
V-I-11-54	Change 2
V-I-11-55 thru V-I-11-56	REV B
V-I-11-57	Change 4
V-I-11-58	Change 3
V-I-11-59 thru V-I-11-76	REV B
V-I-11-77	Change 3
V-I-11-78 thru V-I-11-79	REV B
V-I-11-80	Change 3
V-I-11-81 thru V-I-11-84	REV B
V-I-11-85	Change 4

Page Numbers	Change in Effect
V-I-11-86 thru V-I-11-87	Change 3
V-I-11-88	REV B
V-I-11-89 thru V-I-11-206	Change 4
V-I-12-1	Change 2
V-I-12-2 thru V-I-12-4	Change 3
V-I-13-1 thru V-I-13-2	REV B
V-I-13A-1 thru V-I-13A-2	REV B
V-II-1-1	Change 4
V-II-1-2	REV B
V-II-1A-1 thru V-II-1A-2	REV B
V-II-1A-3	Change 4
V-II-1A-4	REV B
V-II-1A-5	Change 4
V-II-1A-6	REV B
V-II-1B-1	Change 4
V-II-1B-2	Change 1
V-II-1B-3 thru V-II-1B-9	Change 3
V-II-1B-10	Change 4
V-II-IB-11 thru V-II-1B-14	Change 3
V-II-1C-1	REV B
V-II-1C-2	Change 4
V-II-1C-3	REV B
V-II-1C-4 thru V-II-1C-5	Change 3
V-II-1C-6 thru V-II-1C-22	REV B
V-III-FWD-1 thru V-III-FWD-2	Change 2
V-III-FWD-A-1	Change 2
V-III-FWD-A-2	REV B

Page Numbers	Change in Effect
V-III-FWD-B-1	REV B
V-III-FWD-B-2	Change 3
V-III-FWD-B-3	Change 2
V-III-FWD-B-4	REV B
V-III-FWD-B-5	Change 3
V-III-FWD-B-6	REV B
V-III-1-1 thru V-III-1-3	REV B
V-III-1-4 thru V-III-1-6	Change 3
V-III-2-1 thru V-III-2-2	REV B
V-III-3-1	Change 3
V-III-3-2	REV B
V-III-4-1 thru V-III-4-2	REV B
V-III-5-1	Change 4
V-III-5-2 thru V-III-5-9	Change 2
V-III-5-10 thru V-III-5-12	Change 4
V-III-5A-1 thru V-III-5A-2	REV B
V-III-5B-1 thru V-III-5B-2	REV B
V-III-5C-1 thru V-III-5C-2	Change 4
V-III-5D-1 thru V-III-5D-2	Change 4
V-III-5E-1 thru V-III-5E-2	Change 2
V-III-6-1 thru V-III-6-2	REV B
V-III-6-3 thru V-III-6-9	Change 2
V-III-6-10	Change 4
V-III-7-1 thru V-III-7-2	REV B
V-III-8-1 thru V-III-8-4	REV B
V-III-9-1 thru V-III-9-7	Change 3
V-III-9-8	REV B

Page Numbers	Change in Effect
V-III-10-1 thru V-III-10-2	Change 2
V-III-11-1 thru V-III-11-2	REV B
V-III-11-3	Change 4
V-III-11-4 thru V-III-11-24	REV B

Page Numbers	Change in Effect

(This Page Intentionally Left Blank)

JOINT FLEET MAINTENANCE MANUAL

VOLUME V

QUALITY MAINTENANCE

RECORD OF CHANGES

CHANGE NO.	DATE	TITLE OR BRIEF DESCRIPTION	ENTERED BY (INITIALS)

(This Page Intentionally Left Blank)

JOINT FLEET MAINTENANCE MANUAL CHANGE REQUEST FORM

FROM:
ACTIVITY/SHIP _____ E-MAIL ADDRESS _____

CODE/DEPT/SHOP _____ DATE _____

ORIGINATOR _____ TEL EXT (___) _____

VOL-PART-PARA NO. _____ FIGURE _____ TABLE _____

PROCESSING NORMAL _____ URGENT*_____

* (Justify in rationale below if urgent is marked and transmit via e-mail as "High Importance")

PROBLEM DESCRIPTION:

RECOMMENDED CHANGE: (Include any proposed text addition/deletion)

RATIONALE:

E-mail to PTNH.SUBMEPP.JFMMMGR@Navy.Mil
(If mailing, fold on dotted line on reverse side and mail to Submarine Maintenance Engineering, Planning and Procurement (SUBMEPP) Activity or send facsimile to (207) 438-6210.)

FOLD

Commanding Officer

_____
OFFICIAL BUSINESS

Commanding Officer
Submarine Maintenance Engineering,
Planning and Procurement (SUBMEPP) Activity
Attn: Code 1832JM
P.O. Box 2500
Portsmouth Naval Shipyard
Portsmouth, NH 03804-2500

FOLD

JOINT FLEET MAINTENANCE MANUAL

VOLUME V

QUALITY MAINTENANCE

TABLE OF CONTENTS

Page No.

LIST OF EFFECTIVE PAGES i

RECORD OF CHANGES v

JOINT FLEET MAINTENANCE MANUAL CHANGE REQUEST FORM vii

PART I

FOREWORD - QUALITY MAINTENANCE

1.1 Purpose V-I-FWD-1

1.2 Scope V-I-FWD-1

1.3 Manual Organization V-I-FWD-1
- 1.3.1 Basic Maintenance Principles V-I-FWD-1
- 1.3.2 Special Circumstances and Maintenance Support V-I-FWD-1
- 1.3.3 Order of Precedence V-I-FWD-2
  - 1.3.3.1 Operations V-I-FWD-2
  - 1.3.3.2 Maintenance and Technical V-I-FWD-2
- 1.3.4 Advisories V-I-FWD-4

1.4 Need for Quality Maintenance Processes V-I-FWD-4

1.5 Changes and Corrections V-I-FWD-5

1.6 Request for Copies of the Manual V-I-FWD-5

Appendices
- A List of Acronyms V-I-FWD-A-1
- B Glossary of Terms V-I-FWD-B-1

CHAPTER 1 - ORGANIZATIONAL RESPONSIBILITIES

1.1 Purpose V-I-1-1
- 1.1.1 Quality Assurance Organization V-I-1-1

1.2 Fleet Responsibilities V-I-1-1
- 1.2.1 Fleet Commander (Fleet) V-I-1-1

1.3 Type Commander Responsibilities V-I-1-2
- 1.3.1 Type Commander V-I-1-2

1.4 Immediate Superior In Command Responsibilities V-I-1-3
- 1.4.1 Immediate Superior In Command V-I-1-3

1.5 Ship Responsibilities V-I-1-6
- 1.5.1 Ship's Commanding Officer V-I-1-6
- 1.5.2 Ship's Executive Officer V-I-1-7
- 1.5.3 Ship's Department Head V-I-1-7

1.5.4 Ship's Supply Officer V-I-1-8
1.5.5 Ship's Engineer Officer (Submarines only) V-I-1-9
1.5.6 Availability Coordinator (Submarines only) V-I-1-9
1.5.7 Ship's Maintenance Manager (Aircraft Carriers only) V-I-1-10
1.5.8 Ship's Principal Assistant V-I-1-10
1.5.9 Ship's Division Officer V-I-1-10
1.5.10 Ship's Work Center Supervisor V-I-1-10
1.5.11 Ship's Craftsman V-I-1-11
1.5.12 Ship's Quality Assurance Officer V-I-1-12
1.5.13 Ship's Assistant Quality Assurance Officer V-I-1-14
1.5.14 Ship's Quality Assurance Supervisor V-I-1-14
1.5.15 Ship's Quality Assurance Inspectors V-I-1-14
1.5.16 Ship's Controlled Material Petty Officer V-I-1-15
1.5.17 Ship's Cleanliness Inspector/Certifier V-I-1-16
1.5.18 Ship's Nondestructive Test Examiner V-I-1-16
1.5.19 Ship's Nondestructive Test Inspector V-I-1-17
1.5.20 Engineering Department Master Chief V-I-1-17

1.6 Regional Maintenance Center/Fleet Maintenance Activity Responsibilities V-I-1-17
1.6.1 RMC Commander/FMA Commanding Officer V-I-1-17
1.6.2 RMC Deputy Commander/FMA Executive Officer V-I-1-17
1.6.3 RMC Production Officer/FMA Repair Officer V-I-1-17
1.6.4 FMA Supply Officer V-I-1-19
1.6.5 FMA Nuclear Repair Officer V-I-1-19
1.6.6 RMC/FMA Planning and Estimating Officer V-I-1-20
1.6.7 RMC/FMA Division Officer V-I-1-20
1.6.8 RMC/FMA Work Center Supervisor V-I-1-21
1.6.9 RMC/FMA Craftsman V-I-1-21
1.6.10 RMC/FMA Quality Assurance Officer V-I-1-22
1.6.11 RMC/FMA Assistant Quality Assurance Officer V-I-1-23
1.6.12 RMC/FMA Quality Assurance Supervisor V-I-1-23
1.6.13 RMC/FMA Quality Assurance Inspector V-I-1-24
1.6.14 RMC/FMA Controlled Material Petty Officer/Controlled Material Handler V-I-1-24
1.6.15 RMC/FMA Cleanliness Inspector/Certifier V-I-1-25
1.6.16 RMC/FMA Command Nondestructive Test Examiner V-I-1-25
1.6.17 RMC/FMA Nondestructive Test Examiner V-I-1-25
1.6.18 RMC/FMA Nondestructive Test Inspector V-I-1-26

1.7 Other Activity Responsibilities V-I-1-26

CHAPTER 2 - QUALITY MAINTENANCE PROCESSES

2.1 Purpose V-I-2-1

2.2 Technical Work Documents V-I-2-1
2.2.1 Minimum Requirements for using Technical Work Documents V-I-2-1
2.2.2 Maintenance Procedure V-I-2-3
2.2.3 Formal Work Package V-I-2-4
2.2.4 Controlled Work Package V-I-2-4
2.2.5 Maintenance Certification Record/Controlled Work Package (Non-SUBSAFE) V-I-2-6
2.2.6 Sequencing Document V-I-2-7

2.3 Formal Work Package Development V-I-2-7
2.3.1 Responsibility for Preparation of Formal Work Packages/Controlled Work Packages V-I-2-7
2.3.2 Security Classification V-I-2-7
2.3.3 Formal Work Package Format V-I-2-7
2.3.3.1 Formal Work Package Elements Defined V-I-2-8
2.3.3.2 Use and Transcribing of Source Documents V-I-2-13
2.3.4 Formal Work Package Approval V-I-2-13
2.3.5 Controlled Work Package Approval V-I-2-14

2.3.6 Formal Work Package In Process Use V-I-2-14
2.3.7 Formal Work Package Changes V-I-2-14
2.3.7.1 Pen and Ink Changes V-I-2-14
2.3.7.2 Rework Addendum V-I-2-14
2.3.7.3 Revisions V-I-2-15
2.3.7.4 Attachment V-I-2-16
2.3.7.5 Supplement V-I-2-17
2.3.7.6 Voiding V-I-2-17
2.3.7.7 Formal Work Package Closeout V-I-2-17
2.3.7.7.1 Completed Formal Work Packages V-I-2-17
2.3.7.8 Controlled Work Package Closeout V-I-2-18
2.3.7.9 Emergent Controlled Work V-I-2-19
2.3.7.10 Standardized Formal Work Package V-I-2-19
2.3.7.11 Lost Controlled Work Packages Following Controlled Work Package Approval V-I-2-20

2.4 Troubleshooting V-I-2-20

Appendices
A Technical Work Document Illustration V-I-2A-1
B Work Package Decision Process V-I-2B-1
C Formal Work Package Approval/Revision Sheet V-I-2C-1
D Technical Work Document Review and Approval Matrix V-I-2D-1

CHAPTER 3 - PERSONNEL QUALIFICATION AND TRAINING

3.1 Purpose V-I-3-1

3.2 General V-I-3-1
3.2.1 Discussion V-I-3-1
3.2.2 Training V-I-3-1

3.3 Qualification V-I-3-1
3.3.1 Re-qualification V-I-3-2
3.3.2 Maintenance of Qualification V-I-3-2
3.3.3 Required Service Record Entries V-I-3-2

3.4 Qualification Requirements V-I-3-2
3.4.1 Ship's Quality Assurance Officer V-I-3-2
3.4.2 Ship's Assistant Quality Assurance Officer V-I-3-3
3.4.3 Immediate Superior In Command V-I-3-3
3.4.4 Regional Maintenance Center/Fleet Maintenance Activity Quality Assurance Officer V-I-3-3
3.4.5 Regional Maintenance Center/Fleet Maintenance Activity Assistant Quality Assurance Officer V-I-3-4
3.4.6 Quality Assurance Supervisor V-I-3-4
3.4.7 Quality Assurance Inspector V-I-3-4
3.4.8 Controlled Material Petty Officer/Controlled Material Handler V-I-3-4
3.4.9 Steam Plant Cleanliness Inspector/Certifier V-I-3-4
3.4.10 Gas Systems Cleanliness Inspector/Certifier V-I-3-4
3.4.11 Oxygen Clean Instructors V-I-3-5
3.4.12 Ship's and Fleet Maintenance Activity Oxygen Clean Workers V-I-3-5
3.4.13 Oxygen Calibration Technicians V-I-3-5
3.4.14 Work Center Supervisors and Planners V-I-3-5
3.4.15 Qualification Requirements for Submarine Nuclear Propulsion Plant Operator Welders (Navy Enlisted Classification Code 3351 and Supervisor Welders 3361) V-I-3-5
3.4.16 Qualification Requirements for Submarine Fly-By-Wire Ship Control System Maintenance Technician (Navy Enlisted Classification Code 14NP) V-I-3-5

3.5 Training V-I-3-5
3.5.1 Maintenance Personnel Training V-I-3-5

3.5.2 Quality Assurance Training V-I-3-5
3.5.3 Submarine Safety Awareness Training (Submarines and Submarine Repair Facilities only) V-1-3-6

Appendices
A Outlines of Typically Effective Training Topics V-I-3A-1
B Recommended Training Topics for Selected Positions V-I-3B-1
C NAVEDTRA 43523 Qualification Matrix V-I-3C-1

CHAPTER 4 - WELDER, BRAZER AND NONDESTRUCTIVE TESTING QUALIFICATIONS

4.1 Purpose V-I-4-1
4.1.1 General Requirements V-I-4-1
4.1.2 Training V-I-4-1

4.2 General Requirements for Brazers and Welders V-I-4-1
4.2.1 Eye Examination V-I-4-2
4.2.2 Brazing and Welding Procedures V-I-4-2
4.2.3 Brazing and Welding Personnel Knowledge V-I-4-2
4.2.4 Brazer and Welder Identification Numbers V-I-4-2
4.2.4.1 Brazer and Welder Identification Number Log V-I-4-3
4.2.5 Validation of Qualification V-I-4-3
4.2.6 Qualification Records V-I-4-3
4.2.6.1 Individual Brazer/Welder Qualification File V-I-4-3
4.2.6.1.1 Maintenance of Qualification V-I-4-4
4.2.6.2 Method of Qualification Maintenance V-I-4-4
4.2.6.3 Renewal of Qualification V-I-4-4
4.2.7 Effective Date of Qualification V-I-4-4
4.2.7.1 Qualification Results V-I-4-4

4.3 Brazer Qualifications V-I-4-4
4.3.1 Prerequisite V-I-4-4
4.3.1.1 Qualification Test V-I-4-4
4.3.2 Limitations V-I-4-4
4.3.3 Test Assembly Evaluation V-I-4-4
4.3.4 Maintenance of Qualification V-I-4-4
4.3.5 Qualification Renewal V-I-4-5
4.3.6 Transfer of Qualification V-I-4-5

4.4 Qualification Requirements for Navy Enlisted Classification CODE 4955 Welders V-I-4-5
4.4.1 Qualification Prerequisites V-I-4-5
4.4.1.1 Navy Enlisted Classification Code Achievement V-I-4-5
4.4.1.2 Specific Qualifications V-I-4-5
4.4.2 Maintenance of Qualification V-I-4-5
4.4.3 Qualification Renewal V-I-4-5
4.4.4 Transfer of Qualification V-I-4-5
4.4.5 Waiver of Qualification Tests V-I-4-5

4.5 Non-Coded Hull Technicians V-I-4-5
4.5.1 Authorization V-I-4-5
4.5.2 Minor Structure Components V-I-4-6

4.6 Qualification Requirements for Nondestructive Test Personnel V-I-4-6
4.6.1 Purpose V-I-4-7
4.6.2 Levels of Certification V-I-4-7
4.6.3 Certification of Nondestructive Test Personnel V-I-4-7
4.6.4 Renewal of Certification V-I-4-7
4.6.5 Maintenance of Qualification V-I-4-7
4.6.6 Qualification Administration V-I-4-7
4.6.7 Approval of Nondestructive Testing Qualification Examinations V-I-4-8
4.6.8 Transfer of Qualification V-I-4-8

4.6.9 Nondestructive Testing Personnel Records....V-I-4-8
4.6.10 Nondestructive Testing Qualification Log....V-I-4-8
4.6.11 Qualification of Generic Material Identity Testing Personnel....V-I-4-8
4.6.12 Qualification Administration....V-I-4-8
4.6.12.1 Transfer of Qualification....V-I-4-9

CHAPTER 5 - IN-PROCESS CONTROL

5.1 Purpose....V-I-5-2

5.2 Test, Measurement and Diagnostic Equipment....V-I-5-2
5.2.1 General Requirements....V-I-5-2
5.2.2 Torque Wrenches....V-I-5-2
5.2.3 Gauges....V-I-5-5

5.3 Torque....V-I-5-5
5.3.1 General Requirements....V-I-5-5

5.4 Threaded Fasteners....V-I-5-5
5.4.1 Fundamentals....V-I-5-5
5.4.2 Torquing Threaded Fasteners....V-I-5-5
5.4.2.1 Torquing Methods....V-I-5-5
5.4.3 Threaded Fastener Inspections....V-I-5-5
5.4.4 Special Instructions for Self-Locking Nuts....V-I-5-6
5.4.4.1 Running Torque....V-I-5-6
5.4.5 Replacement Fastener Selection....V-I-5-6
5.4.6 Tightening Sequence....V-I-5-7
5.4.7 Thread Lubricants....V-I-5-7
5.4.8 Replacement of Fasteners Without Disturbing Joint Integrity....V-I-5-9
5.4.9 Safety Wiring Using Lockwire/Locking Cable....V-I-5-9

5.5 Flanged Joints....V-I-5-10
5.5.1 General....V-I-5-10
5.5.2 General Flange Designs....V-I-5-10
5.5.2.1 Submarine Flanged Joint Designs....V-I-5-11
5.5.3 Flange Face Surface Finish Requirements and Acceptance Criteria....V-I-5-12
5.5.4 Flanged Joint Makeup....V-I-5-13
5.5.4.1 Flanged Joint Spiral Wound Gasket Installation....V-I-5-13
5.5.4.2 Flanged Joint Flat Gasket Installation....V-I-5-17
5.5.4.3 Flanged Joint O-Ring Installation....V-I-5-18
5.5.5 Piping System O-Ring Unions....V-I-5-19
5.5.5.1 O-Ring Union Joints Operating at a Pressure of 699 psig or less....V-I-5-20
5.5.5.2 O-Ring Joints for a Gas System with Pressures of 700 psig to 2999 psig or Hydraulic Systems up to 3000 psig....V-I-5-21
5.5.5.3 O-Ring Union Joints for Gas Systems 3000 psig or Greater....V-I-5-22

5.6 O-Ring Seals....V-I-5-23
5.6.1 Types of O-Ring Seals....V-I-5-23
5.6.2 General Acceptance Criteria and Guidance for O-Ring Seals, Grooves and Mating Sealing Surfaces....V-I-5-23
5.6.3 Static Radial Seals....V-I-5-24
5.6.4 Dynamic Radial Seals....V-I-5-26
5.6.5 Static Face Seals....V-I-5-27

5.7 V-Ring Packing Seals....V-I-5-27

5.8 Inspections....V-I-5-30
5.8.1 General Requirements....V-I-5-30
5.8.2 Inspection Records....V-I-5-30
5.8.3 Critical Inspections....V-I-5-31
5.8.4 Cleanliness Inspections....V-I-5-33

5.8.5 Nuclear Propulsion Plant and Nuclear Support Facility General Cleanliness Requirements V-I-5-33
5.8.5.1 Reactor Plant V-I-5-33
5.8.5.2 Steam Plant V-I-5-34
5.8.5.3 Nuclear Support Facility V-I-5-34
5.8.5.4 Standard Lubricants and Penetrating Fluid V-I-5-34
5.8.6 General Shipboard Steam Plant (Fossil Fuel) Systems Cleanliness Requirements.....V-I-5-34
5.8.6.1 Purpose V-I-5-34
5.8.6.2 Applicability.....V-I-5-34
5.8.6.3 Discussion V-I-5-35
5.8.6.4 Requirements.....V-I-5-35
5.8.7 Set Stud Inspection V-I-5-36

5.9 Software V-I-5-36
5.9.1 Determination of Acceptability and Use of Piping System Software V-I-5-37

5.10 Submarine Safety Maintenance Certification/Re-Entry Control Nuclear and Non-Nuclear.....V-I-5-38
5.10.1 Purpose V-I-5-38
5.10.1.1 General.....V-I-5-38
5.10.2 Re-Entry Control Program V-I-5-39
5.10.3 Nuclear Submarine Safety System Re-Entry.....V-I-5-39
5.10.3.1 Reactor Plant Planning Yard Liaison Action Requests V-I-5-39
5.10.4 Re-Entry Control Administrative Procedures.....V-I-5-39
5.10.5 Using a Controlled Dive Departure from Specification to Close a Maintenance Certification Record/Re-Entry Control V-I-5-42
5.10.6 Voyage or At Sea Repairs.....V-I-5-43
5.10.7 Exceptions to Re-Entry Control V-I-5-43
5.10.8 Certification Continuity Report.....V-I-5-45

5.11 Reactor Plant Work Accomplishment Report (Submarines Only) V-I-5-45
5.11.1 Purpose V-I-5-45
5.11.2 Specific Instructions for Completing Reactor Plant Work Accomplishment Report Cover Sheet.....V-I-5-46
5.11.3 Specific Instructions for Completing Reactor Plant Certification When New or Previously Uncertified Material is Installed in a Submarine Safety Application.....V-I-5-46
5.11.4 Specific Instructions for Completing Reactor Plant Certification When Previously Certified Material is Reinstalled.....V-I-5-47

5.12 Material Condition Monitoring (Submarines Only) V-I-5-47
5.12.1 Unrestricted Operations Maintenance Requirement Card Program.....V-I-5-47

5.13 Submarine Fly-By-Wire Maintenance Certification V-I-5-48
5.13.1 Purpose V-I-5-48
5.13.1.1 General.....V-I-5-49
5.13.1.2 Applicability.....V-I-5-49
5.13.1.3 Submarine Flight Critical Component Boundary V-I-5-49
5.13.2 Submarine Flight Critical Component Boundary Work Control Procedures V-I-5-49
5.13.3 Submarine Flight Critical Component Boundary Work Control Closeout.....V-I-5-49
5.13.4 Objective Quality Evidence to Support Controlled Work on Fly-By-Wire Ship Control System Submarine Flight Critical Component.....V-I-5-50

5.14 Aircraft Carrier Maintenance Documents.....V-I-5-50
5.14.1 Purpose V-I-5-50
5.14.2 Non-Nuclear Deviations, Waivers and Departure from Specifications.....V-I-5-51
5.14.2.1 During a Maintenance Action.....V-I-5-51
5.14.2.2 During Operations V-I-5-51
5.14.3 Liaison Action Requests - Nuclear Cognizant Areas.....V-I-5-52
5.14.3.1 Technical Responsibilities.....V-I-5-52
5.14.3.2 Technical Resolution V-I-5-52
5.14.4 Nuclear Liaison Inquiry - Nuclear Cognizant Areas.....V-I-5-52
5.14.5 Steam Plant Action Request - Non-Nuclear Cognizant Areas.....V-I-5-52
5.14.5.1 Usage V-I-5-52

5.14.5.2 Submittal V-I-5-53
5.14.5.3 Validation V-I-5-53
5.14.5.4 Categories V-I-5-53
5.14.5.5 Coordination V-I-5-54
5.14.5.6 Routing V-I-5-54
5.14.5.7 Status V-I-5-54
5.14.5.8 Software V-I-5-54
5.14.5.9 Process Map V-I-5-54
5.14.6 Steam Plant Liaison Inquiry - Non-Nuclear Cognizant Areas V-I-5-54
5.14.6.1 Process Manager V-I-5-54
5.14.6.2 Amplifying Information V-I-5-54
5.14.7 Reactor Plant Configuration Change Report V-I-5-55
5.14.8 Preventive Maintenance System Feedback Reports V-I-5-55
5.14.8.1 Feedback Report Types V-I-5-55
5.14.8.2 Feedback Report Screening V-I-5-59
5.14.9 Preventive Maintenance System Technical Feedback Reports V-I-5-59
5.14.9.1 Preventive Maintenance System Coordinating Activities V-I-5-59
5.14.9.2 In-Service Engineering Activities V-I-5-59
5.14.9.3 Action Activities V-I-5-59
5.14.10 Urgent Technical Feedback Reports V-I-5-59
5.14.11 Routine Technical Feedback Reports V-I-5-59
5.14.12 Technical Manual Deficiencies and Manual Change Requests V-I-5-60
5.14.12.1 Technical Manual Maintenance V-I-5-60
5.14.12.2 Technical Manual Deficiency/Evaluation Report V-I-5-60
5.14.12.3 URGENT Deficiencies V-I-5-60
5.14.12.4 Routine Deficiencies V-I-5-60
5.14.12.5 Technical Manual Deficiency/Evaluation Report Process V-I-5-61
5.14.13 Fleet COSAL Feedback Report V-I-5-61
5.14.13.1 Usage V-I-5-61
5.14.13.2 Misuse V-I-5-62
5.14.13.3 Form Location V-I-5-62

Appendices
A Determining Software Usability V-I-5A-1
B Format for Submarine Certification Continuity Report V-I-5B-1
C Format for Fleet Maintenance Activity Certification Report to Tended Submarine V-I-5C-1
D Format for Non-Fleet Maintenance Activity Certification Report to Tended Submarine V-I-5D-1
E Reactor Plant Configuration Change Report V-I-5E-1
F RPCCR Cover Letter for Nuclear Liaison Inquiries (Sample) V-I-5F-1
G RPCCR Cover Letter for SHIPALTs (Sample) V-I-5G-1
H Technical Manual Deficiency Report (TMDER) V-I-5H-1
I Fleet COSAL Feedback Report V-I-5I-1

CHAPTER 6 - MATERIAL CONTROL

6.1 Purpose V-I-6-1
6.1.1 Discussion V-I-6-1

6.2 Nuclear V-I-6-1

6.3 Non-Nuclear V-I-6-1
6.3.1 Controlled Material Determination V-I-6-1
6.3.1.1 General Requirements V-I-6-2
6.3.1.1.1 Determination of Required Repair Parts V-I-6-2
6.3.1.1.2 Determination of Level of Control V-I-6-2
6.3.1.2 Non-Nuclear Material Level Determination V-I-6-2
6.3.1.2.1 Systems and Components V-I-6-3
6.3.1.2.2 Emergent Situation Upgrading V-I-6-3
6.3.1.3 Non-Nuclear Level I Systems and Boundaries V-I-6-3
6.3.1.4 Level I Components V-I-6-4

6.3.2 Quality Assurance List (Submarines only) V-I-6-7
6.3.3 Controlled Material Procurement V-I-6-7
6.3.3.1 General Requirements V-I-6-7
6.3.3.2 Controlled Material Procurement V-I-6-8
6.3.4 Receipt Inspection of Controlled Material V-I-6-9
6.3.4.1 General Requirements V-I-6-9
6.3.4.2 Quality Assurance Forms for Receipt Inspections V-I-6-10
6.3.4.3 Receipt Inspection and Certification of Valve Balls V-I-6-10
6.3.4.4 Level I/SUBSAFE and Submarine Flight Critical Component Receipt Inspection V-I-6-11
6.3.4.5 General Requirements for Level I/SUBSAFE and Submarine Flight Critical Component Material V-I-6-11
6.3.5 Receipt Inspection of Open Purchase (Non-Supply System) or Locally Manufactured Material or Upgrading Supply System Material to Level I (Fleet Maintenance Activity only) V-I-6-16
6.3.5.1 Uncertified Material Required for Level I Applications V-I-6-16
6.3.5.2 Uncertified Material Required for SUBSAFE Applications V-I-6-17
6.3.5.3 Uncertified Material Required for Submarine Flight Critical Component Applications V-I-6-17
6.3.6 Authorized Material Certification Activities V-I-6-17
6.3.6.1 Currently or Previously Authorized Material Certification Activities V-I-6-17
6.3.7 Marking of Level I/SUBSAFE Stock Program Material and Controlled Material V-I-6-19
6.3.7.1 General Requirements V-I-6-19
6.3.7.2 Level I and SUBSAFE Material V-I-6-20
6.3.7.3 Assignment of Material Identification and Control Numbers for Items Manufactured from Certified Raw Materials V-I-6-22
6.3.8 Level I/SUBSAFE Submarine Flight Critical Component Stock Program Material Downgrading V-I-6-24
6.3.8.1 Material Downgrading V-I-6-24
6.3.9 Storage, Issue and Handling of Level I/SUBSAFE/Scope of Certification/Submarine Flight Critical Component Stock Program Material V-I-6-24
6.3.9.1 Storage Requirements V-I-6-24
6.3.9.2 Staging Requirements V-I-6-25
6.3.9.3 Issue of Level I/SUBSAFE/Scope of Certification/Submarine Flight Critical Component Controlled Material V-I-6-26
6.3.9.4 Handling of Material V-I-6-26
6.3.9.5 Maintaining Accountability V-I-6-27

CHAPTER 7 - TESTING REQUIREMENTS

7.1 General V-I-7-1
7.1.1 Testing Requirements for Systems, Portions of Systems and Components V-I-7-2

7.2 Testing V-I-7-3
7.2.1 Test Procedures V-I-7-4
7.2.2 Test Requirements V-I-7-4
7.2.3 Test Pressure Source References V-I-7-5
7.2.4 Non-Nuclear Pressure Drop Tests V-I-7-6
7.2.4.1 General Instructions V-I-7-6
7.2.4.2 Calculations V-I-7-6
7.2.4.3 Example V-I-7-7
7.3 Weight Handling Equipment V-I-7-7
7.3.1 Weight Handling Equipment V-I-7-7

7.4 Exemptions/Alternative Test Requirements (Non-Nuclear) V-I-7-9
7.4.1 General V-I-7-9
7.4.2 Exemptions/Alternatives to Test Requirements (Non-Nuclear unless Specifically Addressed in Nuclear Technical Documents) V-I-7-10

7.5 Reactor Plant and Nuclear Support Facility Testing V-I-7-12

7.5.1 Hydrostatic/Pneumatic Tests or Drop Tests V-I-7-12
7.5.2 Mechanical Joint Fasteners V-I-7-12
7.5.3 Valve Seat Leak Tests V-I-7-12

7.6 Supplemental Test Criteria (Non-Nuclear) V-I-7-13
7.6.1 Purpose V-I-7-13

Appendices
A Testing Requirements for Surface Ship Systems V-I-7A-1
B Testing Requirements for Submarine Systems V-I-7B-1
C SUBMEPP Product Feedback V-I-7C-1

CHAPTER 8 - DEPARTURE FROM SPECIFICATION (DFS/WAIVERS/NUCLEAR LIAISON ACTION REQUEST/STEAM PLANT ACTION REQUESTS)

8.1 Purpose V-I-8-1
8.1.1 Background V-I-8-1
8.1.2 Terminology V-I-8-1
8.1.3 Specification V-I-8-2

8.2 Departure From Specification V-I-8-3
8.2.1 Reporting Departures from Specification V-I-8-3
8.2.2 Types of Departures from Specification V-I-8-3
8.2.3 Permanent and Temporary Approval of Departure from Specification V-I-8-3
8.2.4 Major Departure from Specification V-I-8-4
8.2.5 Minor Departure from Specification V-I-8-6

8.3 Departure From Specification Procedures V-I-8-7
8.3.1 General Administrative Requirements V-I-8-7
8.3.2 Review of Outstanding Departures from Specification V-I-8-8
8.3.3 Clearing of Departure from Specification by Exposing Sea Connected Systems and Hull Integrity Boundary Items to Submergence Pressure (Submarines only) V-I-8-9
8.3.4 Incorporation of Departure from Specification in Selected Record Drawings/Data or Technical Variance Documentation V-I-8-9
8.3.5 Preparations for Correction of Departure from Specification and Clearance During Depot Level Availabilities V-I-8-9
8.3.6 Numbering of Departures from Specification V-I-8-10
8.3.7 Submission and Approval of Departures from Specification V-I-8-10
8.3.8 Departure from Specification Approval and Reporting for Ships While at Sea or at a Port Without a Fleet Maintenance Activity V-I-8-11
8.3.8.1 Evaluation V-I-8-12
8.3.8.2 Condition not Corrected V-I-8-12
8.3.9 Extending a Temporary Departure V-I-8-12
8.3.10 Electronic Non-Conformance Administration V-I-8-12

8.4 Nuclear Cognizant Areas V-I-8-13
8.4.1 Nuclear Powered Surface Ships V-I-8-13
8.4.2 Reactor Plant Systems V-I-8-13
8.4.3 Propulsion Plant Systems (Aircraft Carriers only) V-I-8-14

Appendices
A Departure From Specification Request Message Format V-I-8A-1
B Departure From Specification Clearance/Cancellation Report Message Format V-I-8B-1

CHAPTER 9 - AUDITS, SURVEILLANCE, EVALUATIONS AND ASSESSMENTS

9.1 Purpose V-I-9-1

9.2 General V-I-9-1
9.2.1 Audits V-I-9-1
9.2.2 Surveillance V-I-9-2

9.2.3 Evaluation V-I-9-2
9.2.4 Assessments V-I-9-2
9.2.5 Key Elements V-I-9-2
9.2.6 Record Retention V-I-9-2

9.3 Responsibilities and Procedures V-I-9-2
9.3.1 Ship's Force Audits, Surveillance and Evaluation Program V-I-9-2
9.3.2 Fleet Maintenance Activity Audit, Surveillance and Evaluation Program V-I-9-3
9.3.3 Immediate Superiors in Command Assessments, Audits and Surveillance V-I-9-5
9.3.4 Type Commander Assessments V-I-9-7

9.4 Reporting Audit, Surveillance and Assessment Results and Corrective Action V-I-9-7
9.4.1 Reporting Requirements for External Audits, Surveillances and Assessments V-I-9-8
9.4.2 Correcting Deficiencies in Certified Controlled Work Packages or Objective Quality Evidence Records V-I-9-9

Appendices
A Vertical Audits V-I-9A-1
B Horizontal Audits V-I-9B-1
C Surveillances V-I-9C-1
D Quality Assurance Audit/Assessments/Surveillance Discrepancy Form V-I-9D-1

CHAPTER 10 - QUALITY ASSURANCE RECORDS

10.1 Purpose V-I-10-1

10.2 General V-I-10-1
10.2.1 Quality Assurance Record Requirements V-I-10-1
10.2.2 Record Retention in General V-I-10-2

10.3 Type Commander Quality Assurance Record Retention V-I-10-3
10.3.1 Assessment Record Retention V-I-10-3
10.3.2 Departure from Specification Record Retention V-I-10-3
10.3.3 Material Certification Statement Retention (Submarines only) V-I-10-3

10.4 Immediate Superior In Command Quality Assurance Record Retention V-I-10-4
10.4.1 Assessment and Surveillance Record Retention V-I-10-4
10.4.2 Departure from Specification Record Retention V-I-10-4
10.4.3 Material Certification Statement Retention (Submarines only) V-I-10-4

10.5 Ship's Quality Assurance Record Retention V-I-10-5
10.5.1 Controlled Work Package Log V-I-10-5
10.5.2 Completed Controlled Work Packages V-I-10-5
10.5.3 Controlled Material Records V-I-10-5
10.5.4 Qualification Records V-I-10-5
10.5.5 Departure from Specification Records V-I-10-6
10.5.6 Assessments, Evaluations and Audits V-I-10-6
10.5.7 Training V-I-10-6

10.6 Additional Submarine/Nuclear Unique Quality Assurance Record Retention Requirements V-I-10-6
10.6.1 Submarine Safety/Nuclear/Level I/Submarine Flight Critical Component/Scope of Certification/Other Certification V-I-10-6
10.6.1.1 Reactor Plant Work Accomplishment Report (Submarines only) V-I-10-6
10.6.1.2 Submarine Safety Material Certification (Submarines only) V-I-10-6
10.6.1.3 End of Fleet Maintenance Availability Certification (Submarines only) V-I-10-6
10.6.1.4 Certification Continuity Reports (Submarines only) V-I-10-6
10.6.1.5 Industrial Activity Certification Reports (Submarines only) V-I-10-7
10.6.1.6 Other Certification Reports (Submarines only) V-I-10-7
10.6.1.7 Controlled Material (Submarines only) V-I-10-7
10.6.1.8 Nuclear Records V-I-10-7
10.6.1.9 Nuclear Propulsion Plant Operator Welder Records (Submarines only) V-I-10-7

10.6.1.10 Re-Entry Control/Maintenance Certification Record Exception Objective Quality Evidence and Other Controlled Assembly Records V-I-10-7
10.6.1.11 Scope of Certification (Submarines only) V-I-10-7

10.7 Fleet Maintenance Activity Quality Assurance Record Retention V-I-10-7
10.7.1 Submarine Safety/Nuclear/Level I/Scope of Certification/Other Certification V-I-10-7
10.7.2 Reactor Plant Work Accomplishment Report (Submarines only) V-I-10-7
10.7.3 Controlled Work Package Log V-I-10-7
10.7.4 Completed Controlled Work Packages V-I-10-7
10.7.5 Controlled Material Records V-I-10-8
10.7.6 Assessment, Audits, Surveillance and Evaluations V-I-10-8
10.7.7 End of Fleet Maintenance Activity Certification Report to Tended Submarines (Submarines only) V-I-10-9
10.7.8 Nuclear/Submarine Safety/Scope of Certification Work V-I-10-9
10.7.9 Qualification Record V-I-10-9

CHAPTER 11 - QUALITY ASSURANCE FORMS AND FORM INSTRUCTIONS

11.1 Purpose V-I-11-1

11.2 List of Forms V-I-11-1

CHAPTER 12 - SUBMARINE PRESERVATION

12.1 Purpose V-I-12-1
12.1.1 Scope V-I-12-1

12.2 General Preservation Requirements V-I-12-1

12.3 Submarine Preservation Maintenance Processes V-I-12-1
12.3.1 Maintenance Processes V-I-12-1
12.3.2 Coating System Maintenance Authorization V-I-12-1

12.4 Quality Assurance for Critical Coated Areas V-I-12-2
12.4.1 Critical Coated Areas V-I-12-2
12.4.2 Requirements for Critical Coated Areas V-I-12-2
12.4.3 Test and Inspection Records V-I-12-2
12.4.4 Blaster and Painter Certification V-I-12-2
12.4.5 Coating Inspector Certification V-I-12-2
12.4.6 Coating Inspector Responsibilities V-I-12-3
12.4.6.1 Inspection of Storage and Receipt Inspection Facilities V-I-12-3
12.4.6.2 In-Process Inspections V-I-12-3
12.4.7 Inspection of Final Coating System V-I-12-4
12.4.8 Review of Records for Final Coating Evaluation V-I-12-4
12.4.9 Acceptance/Rejection of Final Coating Systems V-I-12-4

CHAPTER 13 - WIRE REMOVAL AND REPLACEMENT

13.1 Purpose V-I-13-1
13.1.1 Discussion V-I-13-1

13.2 Action V-I-13-1

Appendices
A Wire Removal/Replacement Form MAT-2 ..... V-I-13A-1

NOTE: THE DISTRIBUTION OF PART II OF THIS VOLUME HAS BEEN LIMITED. PART II CONTAINS INFORMATION WHICH IS CONSIDERED NAVAL NUCLEAR PROPULSION INFORMATION (NNPI) AND IS SAFEGUARDED IN ACCORDANCE WITH NAVSEAINST C5511.32.

PART II

CHAPTER 1 - NAVAL NUCLEAR PROPULSION INFORMATION

1.1 Purpose V-II-1-2

1.2 Presentation of Information V-II-1-2

Appendices
A Naval Nuclear Propulsion Information from Part I, Chapter 3 ..... V-II-1A-1
B Naval Nuclear Propulsion Information from Part I, Chapter 5 ..... V-II-1B-1
C Naval Nuclear Propulsion Information from Part I, Chapter 6 ..... V-II-1C-1

PART III

FOREWORD - SCOPE OF CERTIFICATION

1 Purpose V-III-FWD-1

2 Scope V-III-FWD-1

3 Need For Scope of Certification Quality Maintenance Processes V-III-FWD-1

Appendices
A List of Acronyms V-III-FWD-A-1
B Glossary of Terms V-III-FWD-B-1

CHAPTER 1 - ORGANIZATIONAL RESPONSIBILITIES

1.1 Purpose V-III-1-1
1.1.1 Scope of Certification Organization V-III-1-1

1.2 Responsibilities V-III-1-1
1.2.1 Type Commander V-III-1-1
1.2.2 Immediate Superior In Command V-III-1-2
1.2.3 Sustaining Activity/User Activity V-III-1-4

CHAPTER 2 - QUALITY MAINTENANCE PROCESSES

2.1 Applicability V-III-2-1

2.2 Controlled Work Package V-III-2-1

CHAPTER 3 - PERSONNEL QUALIFICATION AND TRAINING

3.1 Applicability V-III-3-1

3.2 General V-III-3-1

3.3 Discussion V-III-3-1

3.4 Qualification Requirements V-III-3-1
3.4.1 Qualifications V-III-3-1
3.4.2 Scope of Certification Quality Maintenance Qualifications V-III-3-1

3.5 Training V-III-3-1
3.5.1 Scope of Certification Awareness Training (Submarines and Submarine Repair Facilities Only) V-III-3-1

CHAPTER 4 - WELDER, BRAZER AND NONDESTRUCTIVE TESTING QUALIFICATIONS

4.1 Applicability V-III-4-1

CHAPTER 5 - IN PROCESS CONTROL

5.1 Purpose V-III-5-1
5.2 Exceptions to Re-Entry Control V-III-5-1
5.3 Planned Maintenance V-III-5-1
5.4 Test, Measurement and Diagnostic Equipment V-III-5-2
5.5 Torque V-III-5-2
5.6 Threaded Fasteners V-III-5-2
5.7 Flanged and Union Joints V-III-5-2
5.8 O-Ring Seals V-III-5-2
5.9 Inspections V-III-5-2
5.9.1 General Requirements V-III-5-2
5.9.2 Inspection Records V-III-5-2
5.9.3 Critical Inspections V-III-5-2
5.9.4 Cleanliness Inspections V-III-5-4
5.10 Software V-III-5-4
5.10.1 Determination of Acceptability and Use of Piping System Software V-III-5-4
5.11 Scope of Certification Maintenance Certification/Re-Entry Control V-III-5-5
5.11.1 Purpose V-III-5-5
5.11.1.1 General V-III-5-5
5.11.2 Re-Entry Control Program V-III-5-5
5.11.3 Re-Entry Control Administrative Procedures V-III-5-6
5.11.4 Using a Departure from Specification to Close a Maintenance Certification Record/Re-Entry Control V-III-5-9
5.11.5 Voyage or At Sea Repairs V-III-5-9
5.11.6 Exceptions to Re-Entry Control V-III-5-10
5.11.6.1 Controlled Assembly Requirements for SOC REC Exceptions V-III-5-10
5.11.7 Certification Continuity Report V-III-5-10
5.12 Material Condition Monitoring (Submarines only) V-III-5-11
5.12.1 Hull Integrity Procedures Program V-III-5-11
5.13 Temporary Modifications V-III-5-11
5.13.1 Temporary Modification Program V-III-5-12
5.13.2 Configuration Control V-III-5-12

Appendices

A Message Format for Certification Continuity for DSS V-III-5A-1
B Letter Format for Certification Report to Tended DSS V-III-5B-1
C Message Format for DDS Transfer of Custody Certificate of Continuity for Off-loads V-III-5C-1
D Message Format for DDS Transfer of Custody Certificate of Continuity for On-loads V-III-5D-1
E Message Format for DDS Acceptance of Custody V-III-5E-1

CHAPTER 6 - MATERIAL CONTROL

6.1 Purpose V-III-6-1
6.1.1 Discussion V-III-6-1
6.2 Controlled Material Determination V-III-6-1

6.2.1 General Requirements V-III-6-1
6.2.2 Scope of Certification Material Control Divisions V-III-6-1

6.3 Receipt Inspection of Controlled Material V-III-6-2
6.3.1 General Requirements V-III-6-3
6.3.2 Quality Assurance Forms for Receipt Inspections V-III-6-4
6.3.3 General Requirements for Receipt of Scope of Certification Material V-III-6-4
6.3.4 Verification of Completion of Required Testing V-III-6-8

6.4 Storage, Issue and Handling of Scope of Certification Material V-III-6-8

6.5 Re-use of Previously Certified Scope of Certification Material V-III-6-8
6.5.1 Material Removed from a Deep Submergence System/Operating Ship V-III-6-8
6.5.1.1 Non-Conforming Material V-III-6-9
6.5.2 Reuse of Scope of Certification Material V-III-6-9
6.5.3 Material Recertification Required V-III-6-10
6.5.4 Material Recertification Following Transfer to Outside Agency V-III-6-10

CHAPTER 7 - TESTING REQUIREMENTS

7.1 Purpose V-III-7-1

7.2 Testing Requirements V-III-7-1

CHAPTER 8 - DEPARTURE FROM SPECIFICATIONS

8.1 Purpose V-III-8-1

8.2 Departure from Specification V-III-8-1
8.2.1 Reporting Departures from Specification V-III-8-1
8.2.2 Approval of Departures from Specification V-III-8-1
8.2.3 Major and Minor Departure from Specification Classification V-III-8-1
8.2.4 General Administrative Requirements V-III-8-1
8.2.5 Submission and Approval of Departures from Specification V-III-8-2
8.2.6 Departure from Specification Approval and Reporting for DSSs While at Sea V-III-8-2

CHAPTER 9 - AUDITS, SURVEILLANCE, EVALUATIONS, ASSESSMENTS AND SURVEYS

9.1 Purpose V-III-9-1

9.2 Responsibilities and Procedures V-III-9-1
9.2.1 User Activity Surveillance and Evaluation Program V-III-9-1
9.2.2 Sustaining Activity Audit, Surveillance and Evaluation Program V-III-9-1
9.2.3 Immediate Superiors In Command Assessments, Audits and Surveillance V-III-9-1
9.2.4 Type Commander Assessments V-III-9-2

9.3 System Certification Authority Certification Surveys and Functional Audits V-III-9-2
9.3.1 Certification Process V-III-9-2
9.3.2 Certification Survey Cards V-III-9-2
9.3.2.1 Categorization of Certification Survey Cards V-III-9-2
9.3.2.2 Categorization of Functional Audit Cards V-III-9-3
9.3.3 Administration of Survey/Audit Findings V-III-9-3
9.3.4 Administration of Surveys for Initial Certification or Reinstatement of Certification V-III-9-3
9.3.4.1 Actions to Support Surveys for Initial Certification or Reinstatement of Certification V-III-9-3
9.3.4.2 Authorization of Operational Demonstration for Initial Certification or Reinstatement of Certification V-III-9-4
9.3.4.3 Certification/Reinstatement of Certification V-III-9-5
9.3.5 Manned Use in Pursuit of Certification or Reinstatement of Certification V-III-9-5
9.3.6 Sustaining Certification Surveys V-III-9-6
9.3.6.1 Scheduling V-III-9-6

9.3.6.2 Actions to Maintain Certification V-III-9-6
9.3.6.3 Authorization for Manned Use Following a Sustaining Survey V-III-9-7
9.3.7 Continuation of Certification V-III-9-7

CHAPTER 10 - QUALITY ASSURANCE RECORDS

10.1 Purpose V-III-10-1

10.2 Departure from Specification Record Retention V-III-10-1

10.3 User/Sustaining Activity Quality Assurance Record Retention V-III-10-2
10.3.1 Miscellaneous Records V-III-10-2

CHAPTER 11 - QUALITY ASSURANCE FORMS AND FORM INSTRUCTIONS

11.1 Purpose V-III-11-1

11.2 List of Forms V-III-11-1

(This Page Intentionally Left Blank)

VOLUME V

PART I

FOREWORD

QUALITY MAINTENANCE

LISTING OF APPENDICES.

A List of Acronyms
B Glossary of Terms

1.1 PURPOSE. To provide procedures and guidance to ensure, with a reasonable level of confidence, that work performed on or for Navy ships is accomplished with first time quality. Further, it is to give the sailors who serve on our ships the confidence that their equipment and systems will operate reliably and safely, in peace or when in harms way.

1.2 SCOPE.

a. The guidance contained in this volume is applicable to every ship and activity of the fleet. The requirements are applicable to Ship's Force when performing maintenance on their own ship, to each Fleet Maintenance Activity (FMA) when performing work on tended ships, and to outside organizations (shipyards, contractors, Regional Maintenance Centers) performing work on ships. This volume does not currently apply to outside organizations (shipyards, contractors) when an availability is conducted in a depot facility and the contract specifies the use of other specifications.

b. This volume is directive in nature and may be cited as authority for action as the need dictates. Where higher authority imposes more stringent requirements or conflicts exist with previously issued Fleet directives, such requirements shall have precedence. When such conflicts are identified, they should be reported immediately to the Fleet and Type Commanders (TYCOM).

1.3 MANUAL ORGANIZATION.

1.3.1 Basic Maintenance Principles. In order for repairs to be conducted reliably and with first time quality, several principles must be adhered to:

a. The worker must have a process that guides him or her in the performance of maintenance (see Part 1 Chapter 2 of this volume).

b. The worker must be trained so that work can be done safely and effectively (see Part I Chapter 3 of this volume).

c The worker must have the proper technical direction (see Part I Chapter 5 of this volume).

d. The worker must have the proper material (see Part I Chapter 6 of this volume).

e. For essential and critical systems, confidence must be established by appropriate testing (see Part I Chapter 7 of this volume).

1.3.2 Special Circumstances and Maintenance Support. In the course of conducting maintenance, special actions are required if technical requirements cannot be met. Other actions not directly related to conducting maintenance are required to support the conduct of maintenance. Other chapters in this volume discuss these:

a. Resources (Organization) (see Part I Chapter 1 of this volume).

b. Departure from Specification (DFS/Waivers/Nuclear Liaison Action Request) (see Part I Chapter 8 of this volume).

c. Audits and surveillance (see Part I Chapter 9 of this volume).

d. Retention of records (see Part I Chapter 10 of this volume).

e. Blank reproducible forms and form instructions (see Part I Chapter 11 of this volume).

1.3.3 Order of Precedence. Guidance documents originate from a variety of sources. When a conflict exists, the following tables are provided to assist in determining precedence of the governing document on a case-by-case basis. However, the tables may not be exact for a particular case and may require adjudication by your Immediate Superior In Command. Equipment and material under the cognizance of Naval Sea Systems Command Nuclear Propulsion Directorate (NAVSEA 08) is maintained in accordance with NAVSEA 08 directives.

NOTE 1: TABLE 1 AND 2 ESTABLISH THE ORDER OF PRECEDENCE FOR OPERATIONS AND MAINTENANCE TECHNICAL DOCUMENTATION GUIDANCE.

NOTE 2: THE EXAMPLES PROVIDED IN THE TABLES ARE NOT LISTED IN ANY PARTICULAR ORDER OF PRECEDENCE.

1.3.3.1 Operations. Table 1 identifies guidance for aligning, starting, stopping and changing modes of operation of systems and equipment.

Table FWD-1 Operating Systems and Equipment

	Precedence	Examples
1	Operating Setting Advisories Issued Before October 2009	Operating Advisories (Fleet Advisories, Class Advisories). Gas Turbine Technical Directives (GTBs, AYBs, etc.)
2	Operating Procedures	Operating Sequence Systems (EOSS, CSOSS, AFOSS, etc.) Reactor Plant Manual, Steam Plant Manual, Steam & Electric Plant Manual, Ships System Manuals
3	Technical Manuals	Component Technical Manuals, NSTM, OEM Technical Manual
4	Directives	SORM, EDORM, NAVORDS
5	Instructions	NAVSEA Letters
6	Locally Generated OSS	In accordance with Operating Sequencing Systems (OSS) Users Guide

1.3.3.2 Maintenance and Technical. Table 2 identifies guidance used for preventive maintenance, troubleshooting, assessment, alignment, calibration and TEMPALTs.

Table FWD-2 Maintenance and Technical Documents

	Precedence	Examples
1	DFS/Requirement Setting Advisories Issued before October 2009	DFS/LAR-Waiver, Fleet Advisories, Class Advisories, Gas Turbine Technical Directives (GTBs, AYBs, etc.)
2	PMS	MRCs, PMRs, Steam Plant Manual, Steam & Electric Plant Manual, Maintenance Requirements
3	Requirements	JFMM, P9290, 7010, 0010, SSCB, FBW, CRL, CMP, DDGOS, GSO, URO-MRC, SOC Notebook

4	Drawings	NAVSHIP drawings, BUSHIP Drawings, NAVAIR Drawings TVDs, SYSCOM Approved Vendor Drawings, DDS/ASDS Approved Drawings
5	Technical Manuals	Component Technical Manuals, NSTMs
6	Directives	SORM, EDOM, NAVORD, SYSCOM Technical Bulletins, Type Commander Technical Notes
7	Instructions	NWPs, SYSCOM Instructions
8	Maintenance Procedures	FWPs, CWPs, TWDs, UIPIs, PPIs, Maintenance Standards, Handbooks

The following abbreviations are used in the table above:

0010	SUBSAFE Manual
7010	Material Control Standard
AFOSS	Aviation Fuels Operational Sequencing System
ASDS	Advanced SEAL Delivery System
AYB	Ancillary Equipment Bulletin
CMP	Class Maintenance Plan
CRL	Calibration Requirements List
CSOSS	Combat Systems Operational Sequencing System
CWP	Controlled Work Package
DDGOS	Deep Diving General Overhaul Specifications
DDS	Dry Deck Shelter
DFS	Departures From Specification
EDOM	Engineering Department Organizational Manual
EOSS	Engineering Operational Sequencing System
FBW	Fly-By-Wire
FWP	Formal Work Package
GSO	General Specifications for Overhaul
GTB	Gas Turbine Bulletins
JFMM	Joint Fleet Maintenance Manual
LAR	Liaison Action Requests
NAVORD	Naval Ordinance
NSTM	Naval Ships Technical Manual
NWPs	Naval Warfare Publications
OEM	Original Equipment Manufacturer
OSS	Operational Sequencing System
P9290	System Certification Procedures and Criteria Manual for Deep Submergence Systems
PMR	Planned Maintenance Requirements
PPI	Portsmouth Process Instruction
SOC	Scope of Certification
SORM	Ships Organization Requirements Manual
SSCB	SUBSAFE Certification Boundary Book
SYSCOM	System Command
TVD	Technical Variance Document
TWD	Technical Work Document
UIPI	Uniform Industrial Process Instruction
URO MRC	Unrestricted Operations Maintenance Requirement Card

1.3.4 Advisories. Commencing with Revision B CH-2, advisories (bulletins, class advisories, Fleet advisories, In-Service Engineering Activity advisories, etc.) will no longer be used to change or set requirements. Any change to requirements will be done by an appropriate document change form (e.g., Advance Change Notice (ACN)).

1.4 NEED FOR QUALITY MAINTENANCE PROCESSES.

a. Quality maintenance processes play a vital role in the mission capability and personnel safety of many organizations. The three examples below demonstrate how actions, which seem small and insignificant can result in severe consequences. In all cases, if a strong and effective quality process had been in effect, the tragic results may have been averted.

(1) On April 10, 1963, while engaged in a sea trials deep dive off the coast of Maine, a flooding casualty occurred in the engine room of the USS THRESHER (SSN 593). A piping failure in one of the salt water systems was subsequently determined to be the most likely cause for the loss of the ship and all personnel onboard. The comprehensive investigation, which followed, recommended numerous changes in the design and maintenance processes for submarines resulting in the Submarine Safety (SUBSAFE) Program, as we know it today.

(2) On January 28, 1986 the space shuttle Challenger was launched from Cape Canaveral Florida. Seventy-three seconds into flight, the spacecraft exploded and seven astronauts lost their lives. Subsequently, on June 6, 1986 a Presidential Commission concluded that the cause of the Challenger accident was the failure of the pressure seal in the aft field joint of the right solid rocket motor. Neither the National Aeronautics Space Administration nor the rocket engine builder developed a solution to the unexpected occurrences of O-ring erosion and blow-by, even though this problem was experienced frequently during shuttle flight history. The commission further concluded that a quality program would have tracked and discovered the reason for increasing erosion and blow by. Additionally, the commission found that the pressure to fly a launch schedule of 24 flights a year created pressure throughout the agency that directly contributed to unsafe launch operations. In short, the syndrome of "we've operated with that problem before and the risk is small" prevailed. The safety and technical requirements became secondary to operational commitments.

(3) On October 30, 1990, a major steam leak occurred in the fire room on board USS IWO JIMA (LPH 2) resulting in the deaths of ten watch standers. The investigation determined the cause to be failure of the bonnet fasteners of a ship service turbine generator root valve. The valve had just been repaired by a shipyard where the bonnet fasteners were replaced with mis-matched and incorrect material. The required fasteners were heat-treated steel studs and nuts. The fasteners installed during the maintenance were a mixture of bolts, studs and black oxide coated brass nuts. The high temperature and pressure placed on the fasteners during plant light off caused the brass nuts to fail catastrophically, which allowed the valve bonnet assembly to separate from the body. The replacement fasteners were furnished by Ship's Force, but no one (ship or shipyard) checked the fasteners, prior to installation, to ensure that the requirements of the technical manual and drawings were met.

b. The above examples clearly demonstrate that, with the technical complexity of present day surface ships and submarines, the need for special administrative and technical controls necessary to ensure conformance to technical specifications during maintenance and testing is necessary. The necessity to perform the work correctly and in accordance with technical specifications is paramount in order to preclude loss of life or loss of a ship. The quality program was developed to assure maintenance of the modern day Fleet is performed in accordance with technical specifications, thus ensuring the highest state of material readiness.

c. The fundamental rule for all maintenance is that technical specifications must be met at all times. If for some reason the specified technical requirements cannot be met, acceptable alternatives must be approved by the appropriate authority and documented as a Departure from Specification or Liaison Action Request (LAR) prior to the continued operation of the ship.

1.5 CHANGES AND CORRECTIONS. Changes, corrections and updates to this volume will be made by the Fleet as required to maintain the volume current with higher authority technical requirements. When higher authority directives are issued which impose more stringent requirements, the Fleet will issue implementing instructions. Comments and suggestions for improving this volume are encouraged from all users. Address comments, recommendations and proposed changes to Submarine Maintenance Engineering, Planning and Procurement Activity using the manual change request form in the front of this volume. If changes are submitted in electronic format, faxed or E-mail, each change request shall contain the information required on the Change Request Form.

1.6 REQUEST FOR COPIES OF THE MANUAL. Activities on distribution for the Joint Fleet Maintenance Manual that require additional copies or activities wanting to be added to distribution should submit a letter to their applicable TYCOM, identifying CD-ROM/paper requirements along with justification for the request. To the maximum extent possible, technical publication libraries at each activity will receive all copies of the manual for that activity and coordinate local distribution and updates.

(This Page Intentionally Left Blank)

APPENDIX A

LIST OF ACRONYMS

ACCMP	Aircraft Carrier Class Maintenance Plan
AEL	Allowance Equipment List
AIT	Alteration Installation Team
APL	Allowance Parts List
AQAO	Assistant Quality Assurance Officer
ASW	Auxiliary Sea Water
AWP	Availability Work Package
CA	Coordinating Activity
CAD	Certifying Activity Designator
CD ROM	Compact Disc Read Only Memory
CET	Carrier Engineering Team
CI	Critical Cleanliness Inspection
CMH	Controlled Material Handler
CMPO	Controlled Material Petty Officer
COSAL	Coordinated Shipboard Allowance List
CRA	Chemistry and Radiological Controls Assistant
CSB	Certification Signature Block
CSMP	Current Ship's Maintenance Project
CWP	Controlled Work Package
DDGOS	Deep Diving General Overhaul Specifications
DFS	Departure from Specification
DL	Deficiency Log
DMP	Depot Modernization Period
DSS	Deep Submergence System
DSW	Diesel Sea Water
ECD	Estimated Completion Date
E-DFS	Electronic Departure from Specification
EHF	Electrical Hull Fitting
EOH	Engineered Overhaul
ERO	Engineered Refueling Overhaul
ET	Eddy Current Testing
E-W/D	Electronic Waiver and Deviation
FBR	Feedback Report
FBW SCS	Fly-By-Wire Ship Control System
FMA	Fleet Maintenance Activity
FRC	Federal Records Center
FTSCLANT	Fleet Technical Support Center Atlantic
FTSCPAC	Fleet Technical Support Center Pacific
FWP	Formal Work Package
GSO	General Specifications for Overhaul of Surface Ships
HFP	Horizontal Fixed Pipe
ID	Identification
ISEA	In-Service Engineering Activity
ISIC	Immediate Superior in Command

JCN	Job Control Number
JID	Joint Identification Number
JSN	Job Sequence Number
LAR	Liaison Action Request
LI/SS	Level I/SUBSAFE
LOEP	List of Effective Pages
LPO	Leading Petty Officer
LWC	Lead Work Center
MB	Megabyte
MCD	Material Control Division
MCR	Maintenance Certification Record
METCAL	Metrology and Calibration
MIC	Material Identification and Control
MIL-SPEC	Military Specification
MIL-STD	Military Standard
MOA	Memorandum of Agreement
MP	Maintenance Procedure
MRC	Maintenance Requirement Card
MS	Maintenance Standard
MSW	Main Sea Water
MT	Magnetic Particle Testing
NACE	National Association of Corrosion Engineers
NAVAIR	Naval Air Systems Command
NAVICP	Naval Inventory Control Point
NAVIMFAC	Naval Intermediate Maintenance Facility
NAVSEA	Naval Sea Systems Command
NAVSEA 08	NAVSEA Nuclear Propulsion Directorate
NAVSEALOGCEN	Naval Sea Logistics Center
NAVSUP	Naval Supply Systems Command
NDT	Nondestructive Test
NEC	Navy Enlisted Classification
NNPI	Naval Nuclear Propulsion Information
NPS	Nominal Pipe Size
NRO	Nuclear Repair Officer
NRP	Nuclear Repair Part
NSDSA	Naval Systems Data Support Activity
NSF	Nuclear Support Facility
NSN	National Stock Number
NSTM	Naval Ships' Technical Manual
OOP	Out Of Position
OPNAV	Naval Operations
OQE	Objective Quality Evidence
OSIC	On Site Installation Coordinator
P&E	Planning and Estimating
PLAD	Plain Language Address Directory
PMS	Planned Maintenance System
POC	Point Of Contact
PPEA	Propulsion Plant Engineering Activity
PQS	Personnel Qualification Standard
PSA	Post Shakedown Availability

PT	Liquid Penetrant Testing
PTS	Pressure Test Station
Q Point	Critical Quality Control Point
QA	Quality Assurance
QAI	Quality Assurance Inspector
QAL	Quality Assurance Lists
QAO	Quality Assurance Officer
QAS	Quality Assurance Supervisor
QC	Quality Control
QM	Quality Maintenance
Ra	Roughness Average
RADCON	Radiological Control
RCI	Reactor Plant Cleanliness Inspector/Certifier
REC	Re-Entry Control
RFI	Ready for Issue
RFOH	Refueling Overhaul
RISIC	Rubber Insert Sound Isolation Coupling
ROH	Regular or Refueling Overhaul
RPM	Reactor Plant Manual
RPPY	Reactor Plant Planning Yard
RPWAR	Reactor Plant Work Accomplishment Report
RT	Radiographic Testing
SAED	Submarine Antenna Engineering Directorate
SAQAM	Submarine Antenna Quality Assured Material
SCI	Steam Plant Cleanliness Inspector
SEOC	Submarine Engineered Operating Cycle
SFCC	Submarine Flight Critical Component
SHCS	Socket Head Cap Screw
SHIPALT	Ship Alteration
SMIC	Special Material Identification Code
SOC	Scope of Certification
SPAR	Steam Plant Action Request
SPLI	Steam Plant Liaison Inquiries
SRA	Selected Restricted Availability
SUBSAFE	Submarine Safety
SUBMEPP	Submarine Maintenance Engineering Planning and Procurement Activity
SUPSHIP	Supervisor of Shipbuilding
SW	SEAWOLF Class Component
TDMIS	Technical Data Management Information System
TDU	Trash Disposal Unit
TFBR	Technical Feedback Report
TGI	Task Group Instruction
TM	Technical Manual
TMDE	Test, Measuring and Diagnostic Equipment
TMDER	Technical Manual Deficiency/Evaluation Report
TMMA	Technical Manual Maintenance Activity
TPD	Test Pressure Drawing
TPS	Test Pressure Station
TRF	Trident Refit Facility
TRS	Technical Repair Standard

TWD	Technical Work Document
TYCOM	Type Commander
UIC	Unit Identification Code
URO	Unrestricted Operations
UT	Ultrasonic Testing
VDD	Version Description Document
VFP	Vertical Fixed Pipe
VT	Visual Testing
VU	VIRGINIA Class Component
WC	Work Center
WCS	Work Center Supervisor

APPENDIX B

GLOSSARY OF TERMS

TERM	DEFINITION
Acceptance Trials	Trials and material inspections conducted underway by the INSURV Board for ships constructed in a private industrial activity to determine suitability for acceptance of a ship by the Navy.
Accepting Authority	The officer designated by the Chief of Naval Operations (CNO) to accept a vessel for the Navy, normally NAVSEA.
Acid Spot Test	See Generic Material Verification/Identification.
Alpha Trial	Builders Propulsion Trial; Acceptance Trial for SSN/SSBN/SSGN Propulsion Plant; Initial Tightness Dive (SSN/SSBN/SSGN); Dive to Maximum Authorized Depth (Selected SSN platforms).
Assist Work Center	The Work Center or group on board ship or at a repair activity with responsibility for accomplishment of a work/maintenance procedure as assist to or under direction of a Lead Work Center.
Audit	A detailed analysis and evaluation of records to determine compliance with existing requirements.
Backup Valve	A valve which, when closed, provides, in part or in whole, the secondary isolation boundary to sea pressure.
Boundary	The specific limits of the physical area involved in work and testing accomplished. That line, point or location identified as the border between controlled and uncontrolled areas. Depending on the type of system involved, it means the system component nearest to the work area which is operated to regulate or shut off the flow of fluid or deenergize electricity to the portion of the system which is being worked.
Bravo Trial	Normally the initial Dive to Test Depth; Noise Trial (SSN/SSBN/SSGN); Strategic Weapons System Missile Testing (SSBN); Weapons testing (Surface Combatants).
Builder's Trials	Evaluation trials and inspections conducted underway by the builder to assure the builder and the Navy that the ship is, or will be, ready for Acceptance Trials. These trials should be a comprehensive test of all ship's equipment and be similar in scope to Acceptance Trials. For nuclear powered surface ships this is the Acceptance Trial for the Nuclear Propulsion plant.
Calibration	The comparison of a measurement system or device of unverified accuracy to a measurement system or device of known and greater accuracy to detect and correct any variation from required performance specifications of the unverified measurement system or device.
Casting	A part formed by pouring molten metal into a mold.
Certification	To provide assurance, in writing, that the component or system conforms to the technical requirements.

Certification (Material)	The process of receipt inspection of material received from the Naval Supply System which establishes the correct level of essentiality and acceptability of the material in accordance with the appropriate specifications and material control standard.
Certified Oxygen Clean	Certified Oxygen Clean applies to material which is intended for or installed in shipboard oxygen generating, storage and distribution systems. The Naval Sea Systems Command (NAVSEA) source document which governs certification of oxygen cleanliness is MIL-STD-1330, Standard Practice for Precision Cleaning and Testing of Shipboard Oxygen, Helium, Helium-Oxygen, Nitrogen and Hydrogen Systems.
Certifying Activity	The activity, approved by Systems Command, that is qualified to complete all of the necessary certifying requirements of the particular specification or standard.
Change In Configuration	Ship's configuration is defined by drawings and drawing revisions specified in the Ship's Drawing Index and by equipment technical manuals applicable to equipment installed in the ship in accordance with these drawings. Changes which do not conform to these documents are a change in configuration. For example: a. Material substitutions. b. Pipe joint additions or deletions. c. Significant rerouting or relocation of piping, cabling and equipment. d. Seal welding of normally mechanically sealed assemblies. e. Changes in piece dimensions.
Charlie Trial	Combat Systems and retesting (SSN/SSBN/SSGN); Acceptance Trials (DDG).
Cleanliness	a. Reactor Plant - Minimum reactor plant cleanliness requirements according to NAVSEA 0989-064-3000; Cleanliness Requirements For Naval Nuclear Plant Maintenance By Forces Afloat. b. Steam Plant - Minimum steam plant cleanliness requirements according to NAVSEA 0989-064-3000. c. Commercial Cleanliness - A term that is used to describe the minimum level of cleanliness which should be maintained during work on propulsion plant systems and equipment not covered by NAVSEA 0989-064-3000. Commercial cleanliness is the absence of foreign material which could, if present, interfere with the function of these systems and components. d. Oxygen System - Minimum oxygen system cleanliness requirements according to MIL-STD-1330, Standard Practice for Precision Cleaning and Testing of Shipboard Oxygen, Helium, Helium-Oxygen, Nitrogen and Hydrogen Systems.
Cleanliness Inspector/Certifier	Individuals trained and qualified to perform cleanliness inspections required by work procedures for systems/components requiring cleanliness controls.

Coaming (Submarine)	The structure surrounding holes in, and extending through one or both sides of the pressure hull structure. They are usually connected by a corner or tee weld. They provide complete or partial strength compensation for the hole. Coamings are used for items like manholes. Hull valves generally use an insert.
Combined Trials	Combined Trials are a combination of an Acceptance Trial with a Final Contract Trial. The INSURV Board normally conducts Combined Trials for nuclear powered submarines.
Component	A self-contained combination of parts, subassemblies, or assemblies which performs a distinctive function in the overall operation of an equipment.
Component Drawing	A vendor, NAVSEA, or shipbuilder drawing which shows the assembly and details of a component such as a valve or pump. Sometimes it is divided into two drawings, one showing the assembly and the other the details. The component drawing list of material usually has a column entitled Material Identification and Control (MIC) level. It is this column on the list of material that is the source of information on whether a piece has a non-nuclear designation of Level I or Level NA (Not Applicable). A SUBSAFE material designation does not normally appear on a component drawing list of material. It is shown instead on a Quality Assurance List (QAL). If a component drawing list of material has no MIC level column, then drawing notes should be reviewed to determine if one or more parts are Level I.
Continuity of Submarine Safety Certification	A status defined by those procedures, tests, and inspections required when hardware is renewed or replaced within the Submarine Material Certification Boundary, as well as the periodic checks or inspections required to assure continued satisfactory material condition for certification.
Controlled Assembly	Process used for Re-Entry Control (REC) Exceptions or Exceptions to Retest Requirements for Mechanical Joints and consists of: a. Verification that surface finishes of gasket/O-ring sealing surfaces are in accordance with applicable specifications. b. Verification that fastener material and installation is in accordance with applicable specifications. c. Verification that gaskets/O-rings are properly installed and in accordance with applicable specifications. d. Assembly is documented on a Quality Assurance (QA) form 34. e. Inspected by a Quality Assurance Inspector (QAI) or Quality Assurance Supervisor (QAS).
Controlled Dive	Conduct of a dive in incremental stages by a submarine to maximum authorized operating depth as measured to the keel to accomplish inspections of those joints and penetrations worked within certified boundaries and not tested prior to ship's underway.
Controlled Material	Any material which must be identified, verified and regulated throughout the manufacturing, installation or repair process in order to meet the specifications required of the end product. Controlled material is comprised of the following:

Controlled Material (Cont'd)

a. Four special classes of material requiring NAVSEA/Naval Inventory Control Point mandated controls while held in the supply system and control and certification by the end user by use of the procedures in Part I, Chapter 6 of this volume:

1. Non-Nuclear Level I.

2. SUBSAFE including Submarine Antenna Engineering Directorate (SAED) - Submarine Antenna Quality Assured Material (SAQAM) with an "SS" Special Material Identification Code (SMIC).

3. Nuclear Level I.

b. Material which NAVSEA considers to be of sufficient criticality to warrant basic receipt inspection by the end user and segregated storage while in supply or a work center, but not necessarily the control and certification required by Part I, Chapter 6 of this volume:

1. Naval Nuclear Propulsion Plant Material stocked with SMIC X1, X3 or X5 (instrumentation drawers, low chloride lagging).

2. Non-Nuclear Materials stocked with SMIC SQ, CP, DG, QA, SP or VG.

3. HY-80/100/130 plate.

Controlled Material Handler — An individual at the TRIDENT Refit Facilities who is qualified to perform the duties of a Controlled Material Petty Officer.

Controlled Material Petty Officer — An individual responsible for the receipt inspection and control of SUBSAFE, Level I, SAED, SAQAM, Project Target, Nuclear Level I and Scope of Certification materials after issue from the supply system.

Controlled Work Package — The records that provide the Objective Quality Evidence (OQE) necessary to certify that the completed maintenance was authorized, required tests were completed and work was certified. This consists of the Formal Work Package (FWP) and OQE.

Craftsman — A mechanic or other individual trained in QA methods and procedures (i.e., inspections, cleanliness, testing, documentation) to perform maintenance on ship's systems or components.

Deep Dive — The first dive to maximum operating depth. This depth will not necessarily coincide with the design test depth of the hull. See definition of Maximum Operating Depth.

Defect — An imperfection that impairs completeness or quality or does not meet required specification.

Delivery — The date the Navy accepts the ship from the ship builder. This requires a recommendation from the INSURV Board to accept/deliver the ship. Delivery of the ship is based on Acceptance Trials and satisfactory correction or resolution of deficiencies.

Departure From Specification	A lack of compliance with any authoritative document, plan, procedure, instruction, etc. See Part I, Chapter 8 of this volume for more information.
Detrimental Material	A material which, when contacting hardware, may have a deleterious effect on the hardware.
Deviation	Any non-conformance of a component or product with specified requirements.
Dock Trial	Dock Trials are those ship trials conducted at the Industrial Activity to determine the ability of the ship, from a material standpoint, to conduct Sea Trials safely.
Documentation	The records of OQE establishing the requisite quality of the material, component or work accomplished. Documentation should be traceable from the item to the records and be filed in an auditable manner.
Downgrading	The formal process used to decertify (removal of MIC mark(s), general identification marks, and in some cases demilitarize) controlled material for general use or disposal.
Electrode	A consumable filler metal which fuses during the welding process and becomes an integral part of the material or non-consumable electrode that fuses the metal during the welding process, but does not become an integral part of the material (e.g., tungsten).
Emergent Work	A task identified shortly before sensitive underway operations which, without extraordinary actions, cannot be completed without causing delay of the ship.
Face Feeding	The manual addition of brazing alloy at the intersection of the fitting face and the pipe. Supplemental face feeding is the addition of brazing material to increase fillet size.
Fast Cruise	A period immediately prior to underway trials during which Ship's Force operates the ship for dockside training. Fast Cruise shall, as far as is practical, simulate at-sea operating conditions.
Final Contract Trials	Trials that are conducted prior to the end of the guarantee period to determine if there are any defects, failures, or deterioration other than that due to normal wear and tear.
Fleet Introduction Team	A team of personnel assembled to support a pre-commissioning crew by monitoring progress of construction and coordinating training and facilities. They provide administrative support in all facets of new construction.
Fleet Maintenance Activity	FMAs include tenders, shore based maintenance activities (Regional Maintenance Activities, Naval Ship Repair Facilities, Naval Submarine Support Facilities, Naval Intermediate Maintenance Facilities (NAVIMFAC), TRIDENT Refit Facilities, Weapons Repair Facilities and other activities of that type) and supporting activities (port services, etc. that perform maintenance on Fleet assets). Regional Repair Centers and Regional Maintenance Teams are treated as FMAs and funded by their respective Fleets.
Fly-By-Wire Ship Control System	A Ship Control System in which the controls are actuated by electrical impulses, as from a computer.

Foreign Material	Any material or object that should not be on or within clean hardware. Examples include, grit, chips, particles, oil, slag, scale, fibers, tape, tools, and loose articles.
Forging	Defined as a part formed by hammering or pressing a piece of heated metal to form a shape.
Formal Work Package	Written instructions, prepared in accordance with Part I, Chapter 2 of this volume for use in production and repair, delineating all the essential elements and guidance necessary to produce acceptable and reliable products.
Gas System Cleanliness Inspector/Certifier	Any person qualified under the requirements of this manual to perform the tasks of initial, in-process and final Cleanliness Certification Inspections for Gas systems.
Generic Material Verification/Identification	A broad identification of materials by simple, direct and rapid analysis methods or a combination of methods (e.g., Color, Magnetic Properties Test, Acid Spot Tests, Metal Comparator Tests). These tests are designed for simple screening and identification of materials by alloy family (as opposed to classification of specific alloys within a family).
Guarantee Material Inspection	A material inspection, conducted in port prior to Post Shakedown Availability (PSA) by a Trial Board prior to the end of the guarantee period when CNO has authorized a Combined Trial to determine if contractor responsible equipment has operated satisfactorily during the guarantee period. It shall include the opening and inspection of equipment designated by the Board together with the operation and visual inspection of equipment and the review of material maintenance records.
Guarantee Period (New Construction)	The period of time immediately following preliminary acceptance (delivery), normally eight or nine months (six months for nuclear powered ships), for which the industrial activity is responsible for the correction of deficiencies.
Guarantee Period (Post Shakedown Availability)	The guarantee period following PSA varies with the type of contract. Historically, a "cost plus" type contract has had a guarantee period of six months and a "fixed price" type contract a period of 90 days. The Supervising Authority will advise at the time of PSA the guarantee that applies.
Homogeneous Lot	a. Nuclear: A lot of material in which each piece is manufactured from the same heat, batch, or melt or has the same vendor traceability code number. b. Non-Nuclear: A group of like items that are produced in a common heat or batch or are produced under continuous cast or pour process with the same vendor traceability numbers, are of the same nominal size, and are received in a single shipment. For batch or continuous cast/pour processes, samples for chemical and mechanical properties shall be taken no less than once in every 8 hours of operation. If additional production processes are used that alter the mechanical properties of the material (e.g., heat-treat, cold or hot forge, extrusion), then all items of the same "Heat" number and additionally processed under the same conditions at the same time shall be considered as a homogeneous lot.
Hull Integrity Boundary	Pressure hull plating (shell plate), pipe, components, etc., NPS 1/2 inch and larger, from the inboard joint of the backup valve (or equivalent) outboard to the hull.

Hull Integrity Fasteners	Hull Integrity Fasteners (HF) are male threaded type items such as bolts, socket head capscrews, studs and bolt studs which are loaded by the differential sea pressure and internal hull pressure, and which are a part of pressure hull integrity components or of systems penetrating the Pressure Hull Structure, from the pressure hull to and including the inboard joint of the backup valve or its equivalent. Nuts and lock-washers are specifically excluded.
Hull Valve	A valve which, when closed, provides, in part or in whole, the first isolation boundary to sea pressure. The hull valve may also be referred to as the primary closure.
Immediate Superior In Command	The ISIC is defined as follows: a. For Submarines - The Squadron/Group. b. For Aircraft Carriers - The TYCOM. The TYCOM may designate a representative in carrying out certain Immediate Superior in Command functions. c. For Surface Forces - The Command holding administrative control.
Industrial Activity	The activity responsible for accomplishing construction or repair of ships whether private or public. This includes Naval shipyards, private shipyards, shipbuilders, vendors, Naval Aviation Depots, Naval Ship Repair Facilities, and other Naval Repair/Technical Activities (i.e., Naval Underwater Weapons Center, Naval Ships Weapons Center, etc.).
Initial Dive	For purposes of seawater valve and system testing, as defined in NAVSEAINST C9094.2, the first dive to a depth not previously reached during the trials.
Initial Tightness Dive	First submergence (a submarine's Alpha Trial).
In-Process Surveillance	The review of work in progress by personnel not directly involved with the work to assess such attributes as tagging and installation of controlled material, compliance with technical procedures, and recording of required data.
In-Service	Nuclear powered ships are assigned an active status of In-Service approximately two to four weeks (two to four months for Nuclear Powered Aircraft Carriers) prior to the commencement of Sea Trials and maintain this status until commissioning.
Inspection	A certification conducted by a separate individual qualified as an inspector (QAS, QAI, Cleanliness Certifier/Cleanliness Inspector, Nondestructive Test (NDT), Radiological Controls Monitor, Radiological Controls Shift Supervisor) on any system or component, which by its nature, is critical to the successful completion of the task.
Inspection Record	Record data showing the results of an inspection with appropriate identifying information as to the characteristics inspected and item inspected.

INSURV	Prior to the acceptance and delivery of a new ship, whether built by a private or naval industrial activity, all machinery, electronics and weapons systems installed shall be subjected to acceptance trials to determine that the installations are capable of meeting performance specifications. Depending upon your platform, these trials are referred to as either Acceptance Trials, Combined Trials or INSURV. This independent verification of the ship's readiness for acceptance and recommendation for fleet introduction is the responsibility of the President, Board of Inspection and Survey.
Leading Petty Officer/Work Center Supervisor	That person as defined by the appropriate Organization and Regulations Manual, responsible for ensuring the quality of work performed by his/her work center.
Lead Work Center	The Work Center or group on board ship or at a repair activity with prime responsibility for accomplishment of a work/maintenance procedure.
Level I	A designation for systems and components for which the Navy requires a high degree of assurance that chemical composition and mechanical properties of the installed materials meet the specified requirements.
Level of Essentiality	A range of controls in two broad categories representing a high degree of confidence that procurement specifications for piping system components have been met. These categories are: a. Verification of material, which ensures that the manufacturer has complied with procurement requirements for chemical composition and physical properties of the material. b. Confirmation of satisfactory completion of tests and inspections required by the ordering data (e.g., Liquid Penetrant Testing (PT), dimensions, hydrostatic strength and porosity).
Liaison Action Request	A request for technical concurrence from Planning Yard or NAVSEA. Procedures for requesting information from the Reactor Plant Planning Yard are contained in Commissioned Submarine General Reactor Plant Overhaul and Repair Specification (NAVSEA 0989-LP-037-2000), Nuclear Support Facilities Overhaul and Repair Specification (NAVSEA 0989-LP-058-1000), Commissioned Surface Ship General Reactor Plant Overhaul and Repair Specification (NAVSEA 0989-043-0000) and TYCOM instructions. For non-nuclear systems and components, the LAR can be in any format which is convenient for the user, provided that it is identified as a LAR, clearly defines the exact information needed, lists the drawings in question, and states the date by which a reply is requested to support ship schedules. Volume II of the Fleet Modernization Program Management and Operations Manual contains a format for a non-nuclear LAR which FMAs may adapt for their use.
Loss of Traceability	A situation in which controlled material cannot be positively traced to the results of chemical and physical testing performed to prove that the material is that required by the specification to which it was made or bought. In each instance of loss of traceability, the FMA or ship Quality Assurance Officer must initiate action to restore traceability or use alternate, traceable material.

Maintenance Certification Record	The record (QA form 9) used to document the physical work boundaries, define the work involved, specify the material control and fabrication control procedures, specify inspection and test requirements, list the certification records involved, and provide approval and acceptance signatures and dates for work within the SUBSAFE boundary, a nuclear system or a Level I system or component.
Maintenance Manager	Those persons, such as Port Engineers, Ship Superintendents, Ship's Coordinators, and Maintenance Planning Managers, assigned to assist Ship's Force in the tracking of work candidates, development of work packages, and tracking of FMA/Industrial Activities assigned jobs.
Maintenance Requirement Card	Defines maintenance inspections and actions associated with the Planned Maintenance System (PMS).
Maintenance Standard	(Submarines only) A document which specifies minimum technical requirements for acceptable refurbishment of submarine components, including inspection and testing criteria and parts replacement information, in accordance with NAVSEA maintenance plans.
Major Repair	Non-nuclear major repairs are those repairs which: a. Structurally affect the pressure-containing portion of a piping system or component through welding (except as defined under Minor Repair), brazing or other fabrication process, including new mechanical joints in which a flange or union tailpiece is replaced using a weld or braze. b. Involve installation of new pressure boundary parts or components which have not been previously strength tested.
Mapping Drawing	A diagrammatic drawing, verified by ship check, that identifies and specifies the location of elements which must meet a SUBSAFE requirement of NAVSEA 0924-LP-062-0010, SUBSAFE Requirements Manual. Pipe joints, flexible connections and castings are examples of items identified on the mapping drawing. Pipe joints are each numbered (e.g., MSW-56178) and the type of joint identified (e.g., WB - butt weld). The mapping drawing will also reference a QAL as applicable. Mapping drawings are discussed in the introductions of the SUBSAFE Certification Boundary Book. Most of the symbols seen on a mapping drawing are: BF - Brazed joint, face fed BP - Brazed joint, pre-inserted ring CN - Casting F or FG - Flange FH - Flexible connection HF - Hull Integrity Fastener IN - Pressure hull insert SL - Seal U - Threaded pipe union WA - Welded attachment WB - Butt weld WF - Fillet weld WL - Seal weld WM - Bimetallic weld

Mapping Drawing (Cont'd)	PE - Penetration	WN - Welded nozzle
	PF - Pressure hull fitting	WR - Root connection (or boss)
	PM - Pressure hull penetrating mast	WS - Socket weld

Material Identification and Control Number/Marking

A unique number assigned to certified material by the Certifying Activity (for material) which provides traceability to OQE in accordance with the applicable Material Control Standard.

Maximum Operating Depth (Also Maximum Authorized Operating Depth)

The depth to the keel for a particular submarine which is authorized by Commander Submarine Forces Atlantic/Commander Submarine Forces Pacific upon the recommendation of NAVSEA, as the depth not to be exceeded in operations. This depth is normally the Test Depth but may be reduced in specific cases. The depth authorized may be less than, but in no case exceed, the depth recommended by NAVSEA.

Minor Repair

Minor repairs are operations that could be considered maintenance such as replacing packing and pressure seal ring, lubricating, lapping or grinding of seats, and replacing damaged parts such as stems and discs. For the purpose of this manual the definition in Naval Ships' Technical Manual Chapter 505 or NAVSEA S9074-AR-GIB-010/278, whichever is applicable, is used for the term "Minor" repair.

Moderate Speed

The range of speed that allows the submarine optimum recovery (as shown on applicable submerged operating envelope curves) if loss of stern plane control and/or flooding occurs. Normally 8-15 knots.

Naval Supervisory Authority/Supervisory Authority

The officer designated to represent the Navy Department at an industrial activity; normally a Supervisor of Shipbuilding (new construction), Regional Maintenance Center (Conversion and Repair) or the Commander of a Naval Shipyard.

New Mechanical Joint

A joint where either a flange or union is replaced. A new mechanical joint is a major repair and requires a hydrostatic test to the specific requirements of a particular system.

Nominal Operating Pressure

The approximate pressure at which an essentially constant pressure system operates when performing its normal function. This pressure is used for the system basic pressure identification.

Nondestructive Testing

All methods of testing used to detect or measure the significant properties or performance capabilities or material, parts, assemblies, equipment, or structures which do not impair the service ability of the parts tested. These tests include:

a. Radiographic Testing (RT).

b. Magnetic Particle Testing (MT).

c. Liquid Penetrant Testing (PT).

d. Ultrasonic Testing (UT).

e. Visual Testing (VT).

f. Eddy Current Testing (ET).

Nondestructive Testing (NDT) Supervisor	The NDT Supervisor is the individual designated by the respective Division Officer and is qualified in specific methods for which he is designated NDT Supervisor. (There may be more than one NDT Supervisor in an organization.)
Nuclear Regional Maintenance Department (NRMD)	NRMD performs intermediate level nuclear maintenance and repair work, consolidating efforts in a regional area, thus eliminating duplication of infrastructure and maximizing effective use of funds. This is accomplished by the use of military personnel integrated into the experienced nuclear production, radiological and engineering resources of the parent shipyard. NRMDs are an expansion of their parent shipyard.
Objective Quality Evidence	Any statement of fact, either quantitative or qualitative, pertaining to the quality of a product or service based on observations, measurements, or tests which can be verified. (Evidence will be expressed in terms of specific quality requirements or characteristics. These characteristics are identified in drawings, specifications, and other documents which describe the item, process, or procedure). a. Tests can be based on heat, batch, continuous cast or pour, or other manufacturing processes, providing the manufacturer can prove the test sample was representative of the material supplied. b. Material supplied will bear a unique traceability marking and report of supporting test quantitative data will bear an identical marking.
Oxygen Clean Inspector	A Cleanliness Inspector/Cleanliness Certifier qualified by the Oxygen Clean Instructor and certified by the Department Head or Commanding Officer to perform cleanliness inspections on systems under the requirements of MIL-STD-1330.
Oxygen Clean Instructor	An individual certified by his/her Commanding Officer to train and qualify personnel in the procedures and requirements of MIL-STD-1330.
Oxygen Clean Worker	An individual qualified by the Oxygen Clean Instructor and certified by the Department Head to perform maintenance on systems under the requirements of MIL-STD-1330.
Planning Yard	The Naval Shipyard or other activity designated by NAVSEA to perform the following tasks pertaining to specifically assigned ships: a. To provide, and/or coordinate the provision of technical and other services in design matters. b. To be responsible for the availability of a complete up-to-date file of working drawings, Selected Record Drawings, and Data. c. To provide a central repository, reproduction, and distribution services, or to coordinate such services, for working drawings, Selected Record Drawings, and Data. d. To provide these services to the fullest extent possible within the limits of the funds provided.
Positive Material Identification	Process by which the craftsman ensures that the material to be or being installed is the correct material as specified by the plan, technical manual, etc. This process is also referred to as "Positive Material Identification and Verification".

Post Shakedown Availability	An industrial activity availability following Final Contract Trials/Guarantee Material Inspection assigned to correct deficiencies found during the shakedown period or to accomplish other authorized improvements.
Pressure Boundary Part	An item which separates an internal fluid from the atmosphere (or another fluid at reduced pressure) or which joins two other pressure boundary parts.
Pressure Hull Fittings	All items and assemblies which penetrate the hull integrity boundary and are attached either mechanically or by welds to penetrations, inserts or plating. This includes structural, piping, mechanical and electrical pressure hull fittings and mechanical stuffing boxes; specifically excluded are all cables, O-Rings, V type packing or packing around mechanical shafts.
Procedure	Written instruction designed for use in production and repair, delineating all the essential elements and providing guidance necessary to produce acceptable and reliable products. The term "procedure" includes PMS Maintenance Requirement Card (MRC), technical manuals, reactor plant manuals, standard operating procedures, ship's instructions, etc.
Product Quality Deficiency Reporting	A method for reporting deficiencies in new or newly reworked material which may be attributable with contractual or specification requirements or substandard workmanship performed by depots, naval shipyards, contractors or subcontractors.
Q-Point	Critical Quality Control Point. A work process, regardless of type (maintenance, training, administrative, etc.), whose proper accomplishment overwhelmingly affects the ultimate first time quality success of the process.
Quality Assurance	A systematic review of Quality Maintenance records and all production actions which will provide adequate proof and confidence that work performed or material manufactured will perform as designed and that there is documentary evidence to this effect.
Quality Assurance Inspector	The designated individual(s) in FMA and ship work centers who inspect the work of other individuals, not their own work. Certified as qualified by the Commanding Officer or Repair Officer.
Quality Assurance List	(Submarines only) QAL on NAVSEA Drawings specify NDT requirements for items scheduled for installation within the SUBSAFE boundary during new construction. The QALs should only be utilized for guidance subsequent to ships' commissionings, since they will not necessarily reflect current NDT requirements.
Quality Assurance Officer	An individual assigned the responsibility for the organization, administration, training and execution of the QA Program.
Quality Assurance Supervisor/Specialists	Personnel assigned to the FMA Quality Assurance Officer to assist in implementing the QA Program. QASs are certified as qualified by the FMA Commanding Officer. A Quality Assurance Specialist is an individual at the TRIDENT Refit Facilities who is qualified to perform the duties of a QAS.
Quality Control	On the job supervision, management and inspection which identifies and ensures proper workmanship and/or materials are being produced.

Reactor Plant Cleanliness Inspector/Certifier	Any person qualified under the requirements of the manual to perform the tasks of initial, in-process and final Cleanliness Certification Inspections for Reactor Plant Systems.
Reactor Plant Work Accomplishment Report	A report submitted to the Reactor Plant Planning Yard by ships, FMAs and shipyards which certifies work accomplished by them on reactor plant hull integrity areas. These areas, identified on the ship specific Reactor Plant Work Accomplishment Report, are nuclear and are usually within the SUBSAFE boundary.
Re-Entry	Includes any and all work and testing in a SUBSAFE certified system including penetration of the pressure hull from the first breaching through final grooming, testing and return to final operation, (e.g., breaking a mechanical flange, a sil-braze, or welded joint, removal of a valve bonnet, repacking a gland).
Re-Entry Control	The controls used to document the re-entry and re-certification of SUBSAFE systems or components. The QA form 9 (Maintenance Certification Record) is used to document the acceptance of a completed SUBSAFE system Re-entry.
Reinstall	To use or install the previously installed item/component.
Re-Made Mechanical Joint	A flange or union joint which has been reassembled using existing or new threaded fasteners on which no brazing or welding was accomplished on the joint parts during the repair or modification process.
Repair	Refurbishment other than mere disassembly and/or cleaning.
Replace	To install a new item or component.
Rework	The unplanned repetition of a step or a series of steps in a Formal Work Package.
Sample	One or more units of a product selected at random from the material or process represented.
Selected Record Data	Tables, charts, drawing indices, allowance lists, damage control books and other data (excluding drawings) specifically selected for their reference value and maintained current throughout the life of the ship.
Selected Record Drawing	A designated group of drawings made applicable to an individual ship by illustrating final shipboard installations of important features, systems and arrangements that must be maintained up to date and correct throughout the life of the ship.
Ship	Any submarine, surface ship, tender, or other vessel assigned to the Fleet.
Ship's Drawing Index	A list of drawings, normally on microfiche, or Compact Disc Read Only Memory (CD ROM) which applies to each ship. It lists ship construction drawings, ship modification drawings and manufacturer (vendor) component drawings. It is here that system diagrams, mapping drawings and in some cases, QALs are identified by drawing title or by a code in a column after the drawing title and number.
Small Item	Items that have a marking surface less than 3/8 of a square inch area.
Software	Gaskets, packing and seals used in mechanical flange or union joints in piping systems.

Special Cleanliness	A requirement for components used in oxygen and nitrogen systems to prevent combustion of contaminants and maintain purity of the gas. The cleaning requirements are discussed in Naval Ships' Technical Manual Chapter 550, Industrial Gases: Generating, Handling and Storage.
Special Material Identification Code	A two-digit letter or number code at the end of the National Stock Number or Navy Item Control Number to provide visibility to designated items to ensure maintenance of their technical integrity. The following SMICs from Appendix C of SPCCINST 4441.170 or Appendix B of SPCCINST 4441.176 are for material commonly used in the Fleet.

CP An item that requires special cleaning and packaging for oxygen/nitrogen service (e.g., valves, piping system, generators).

C1 An item that requires special cleaning and packaging for oxygen/nitrogen service (e.g., valves, piping system, generators) which also must meet the requirements of Level I.

DG An item that requires special cleaning and packaging for oxygen/hydrogen service (e.g., valves, piping system, generators).

D1 An item that requires special cleaning and packaging for oxygen/hydrogen service (e.g., valves, piping system, generators) which also must meet the requirements of Level I.

L/I (Level I) An item that supports either a SUBSAFE or Level I system that has undergone the extreme material control/QA techniques that provide OQE of its acceptance for its appropriate application. Each item has certification papers (or special markings that provide traceability to the certification) that pedigree its material and physical properties, provide traceability to manufacturer, contract list and lot, and document the QA system/test requirements applied to the item.

NT Annular ball bearings for quiet operation applicable to submarine usage (noise tested bearings).

QA Equipment and/or parts requiring special material control and QA which supports surface ship or submarine applications.

Q3 Items that support a Level I or SUBSAFE critical component/system that has undergone QA during the acquisition process (e.g., a ball and seat assembly utilized in a Level I or SUBSAFE ball valve based on ship system application). This, however, does not include Trash Disposal Unit, Signal Ejector, Salvage Air, and open ended applications which are procured as Level I or SUBSAFE. "Q3" SMIC invokes chemical and mechanical certifications traceable to the heat code permanently marked on the material. It should be noted that "Q3" SMIC coded material is not receipt inspected or MIC marked by the receipt inspection activities.

SB SUBSAFE items (covered by SS SMIC) for which special cleaning and packaging for oxygen service is required.

Special Material Identification Code (Cont'd)

SP An item which is unique to the Navy Strategic Systems Program Office controlled fleet ballistic missile weapon system. The SMIC SP establishes a weapons system relationship but does not signify the technical considerations as described in definition X2, X3, L/I and SS.

SQ SAQAM, other than items which are SS SMIC coded, which is administered by the SAED of the Naval Ship System Engineering Station, Mechanicsburg Detachment. It includes whole components and repair parts.

SS An item in support of the SUBSAFE Program that meets all requirements for L/I coding. In addition, the installation of this item in critical (SUBSAFE) systems requires that the item's vital attributes be further pedigreed by 100% NDT. These tests are primarily radiography but may include MT, PT, and/or UT.

SW SEAWOLF Class Ship Control System approved Ships Flight Critical Components.

S1 An item which is unique to surface ship applications which also meets the requirements of Level I.

TR TRIDENT Ship's Program.

VG Equipment and/or parts requiring special material control and QA which support surface ship or submarine applications. Special cleaning and packaging for oxygen/hydrogen service is required.

VU VIRGINIA Class Ship Control System approved Ships Flight Critical Components.

X1 NAVSEA Nuclear Propulsion Directorate (08) controlled material identified as "2S" cognizance material with an "X1" SMIC.

X2 Naval Reactor Plant material which is specially designed, manufactured and/or treated for use in a Naval Reactor Plant. In addition, this material is inspected (or sample inspected) by a Naval shipyard prior to being placed in Navy Supply System Stock.

X3 Naval Reactor Plant material specially designed, manufactured and/or treated for use in a Naval Reactor Plant.

X4 Naval Reactor Plant valves and auxiliary equipment used in secondary Nuclear Level I applications which are technically receipt inspected and certified as ready for use by a receipt inspection activity.

X5 Naval Reactor Plant component level items not qualifying for X1, X2, X4 or X6 SMIC assignment. This material is not inspected by a Naval shipyard prior to being placed in Naval Supply Stock and will not have a Ready-For-Issue tag attached.

Special Material Identification Code (Cont'd)	X6 Naval Reactor Plant items specifically designed, manufactured and/or treated for use in Level I Naval Reactor Plant applications. All Level I items which do not qualify for SMIC X1, X2 or X4 assignment are assigned SMIC X6. Since the outer packaging of material received from the Naval Supply System may not be marked with an X6 SMIC, end users should consult applicable logistics information (e.g., the Q Coordinated Shipboard Allowance List, FEDLOG, Haystack, etc.) to determine the current applicable SMIC assignment. If an X6 SMIC is currently assigned in any of the applicable logistics information, the material is considered pre-certified Level I material and does not require a Ready-For-Issue tag.
Specification	Any directive, whether technical or administrative, in any format, such as instruction, technical manual, drawing, standard or publication.
Steam Plant Cleanliness Inspector/Certifier	Any person qualified under the requirements of this manual to perform the tasks of initial, in-process and final Cleanliness Certification Inspections for Steam Plant Systems.
Submarine Antenna Engineering Directorate - Submarine Antenna Quality Assured Material	Submarine antenna material which is quality assured by the SAED, (formerly the Submarine Antenna Quality Assurance Division) and marked/recorded to ensure proper documentation and traceability
Submarine Safety Certification	Investigative effort and corrective action developed under the certification requirements for safety of submarine operations which has as its specific aim an order of magnitude increase in the safety of submarine operations. Accomplishment provides reasonable assurance that the integrity of defined critical systems and components, and the casualty recovery capabilities are adequate to permit unrestricted operations to test depth.
SUBSAFE	The acronym for Submarine Safety which applies to all submarine classes. The SUBSAFE program provides a high level of confidence in the material condition of the hull integrity boundary and in the ability of submarines to recover from flooding and control surface (e.g., bow, rudder, stern plane) casualties.
SUBSAFE Attribute	Test and inspection requirements for SUBSAFE systems and components.
SUBSAFE Certification	That area within which the requirements of the SUBSAFE Requirements Manual apply. It includes those inboard piping and mechanical systems maintaining watertight integrity and recovery capability from a flooding casualty.
SUBSAFE Certification Boundary Book	A book presenting simplified diagrams or sketches which show the hull non-nuclear integrity and certified system boundaries for a specific submarine, class of submarine or group of submarines within a class.
SUBSAFE System	A submarine system or component designed, installed and maintained to: a. Prevent flooding of the submarine (e.g., failure would cause flooding of ship). b. Enhance recovery in the event of flooding (e.g., flood control).

SUBSAFE System (Cont'd)	c. Ensure reliable submerged ship control (e.g., certain parts of the steering and diving system). d. SUBSAFE systems are shown in the SUBSAFE Certification Boundary Book.
Surveillance	Observations and analysis of actual work procedures and methods to verify compliance with technical requirements.
System	All components, piping, fittings, including electrical and mechanical items, which together form and contribute to the operation of an integrated functional arrangement. The "system" as used in this manual is not limited to piping only unless "piping" is specified. Any part which receives the fluid, controls, or is controlled by the fluid is included.
System Design Pressure (Non-Nuclear)	System design pressure is the pressure used in the calculation of piping and piping components minimum wall thickness and will not be less than the maximum system pressure (for general guidance, design pressure may be estimated within 2 to 3% by multiplying maximum operating pressure by 112%).
Target Material or Project Target Material	As defined in NAVSEA S9213-45-MAN-000 and SPCCINST 4440.376. All material issued with a "Project Target Ready-For-Issue" tag for use as Nuclear Level I is either X1, X2 or X4 SMIC coded.
Technical Repair Standard	See Maintenance Standard. Document which provides minimum requirements for the acceptable repair and refurbishment of submarine equipment and components and identifies planned and contingency material necessary to ensure satisfactory operation until the next planned maintenance action.
Technical Variance Documentation	Technical Variance Documentation is documentation used to document configuration changes made during an overhaul or refit that influence a maintenance, alteration and repair, but will not be incorporated in a revision to a drawing as accomplished on the ship (SSN 688 Class, SSBN/SSGN 726 Class, and S5W Reactor Plant).
Technical Work Document	The work procedure that will provide the craftsman with clear, concise and technically correct instructions to complete the maintenance task while conforming to technical specifications. Technical Work Documents consist of three general types: Maintenance Procedures, Formal Work Packages and Controlled Work Packages.
Test Depth	For the purpose of the proper method of measuring and specifying Test Depth, the following applies: Test Depth shall be measured to the bottom of the keel for all types of submarine operations. Builders trials and trials following major industrial activity availabilities greater than six months, shall be at a tolerance of plus zero (0), minus twenty (20) feet of Test Depth when specified. All other trials can be conducted at 95% to 100% of Test Depth to satisfy all the requirements specified for 100% Test Depth.
Test-Drop	A pressure test used to determine the integrity of a system. It is performed upon satisfactory completion of the strength and porosity hydrostatic test and is accomplished by pressurizing the system to its system working pressure while it is arranged for normal operation. Pressure is applied using either air or an inert gas as applicable. The test is held and monitored for a specified period of time and the system tightness is determined by correcting the pressure drop for temperature change.

Test Equipment/Working Level Instruments	For purposes of this manual, test equipment will be interpreted as comprising all general purpose equipment (standard measuring instruments), special testing equipment, including such classes as checkout equipment, acceptance equipment, inspection equipment, gauges and associated accessories.
Test-Hydrostatic	A test where the system or a portion of the system is filled with fluid and pressurized above normal operating pressure to a specified hydrostatic test pressure and inspected for leaks and visible permanent deformation.
Test-Joint Completion	See Test-Mechanical Joint Tightness.
Test-Mechanical Joint Tightness	A pressure test where a portion of a system or the entire system is pressurized to its system nominal operating pressure or "J" test pressure to determine leak tightness after closing a mechanical joint where leak tightness is obtained by gaskets, seal welding or threads.
Test-Operational	(Non-Nuclear) a. A test of a system to nominal operating pressure using the system fluid, pumps and installed system gages vice test instrumentation to determine leak tightness; and/or b. A test of a system to assure that all items, components, controls and indications function as designed and in accordance with specifications.
Test-Pneumatic	A test where a portion of the system or the entire system is pressurized with gas and inspected for leaks.
Test Pressure Drawing	Drawings which have been developed from system diagrams for classes of submarines and contain strength and mechanical joint tightness pressures for all portions of piping systems. These pressures are displayed in "indicators" which contain two test pressure values as illustrated in the Submarine Non-Nuclear Piping Systems Test Manual, NAVSEA S9505-AF-MMA-010/PIPING SYSTEMS.
Test-Shop	A test performed on a section of piping or a system by an FMA work center when the subassembly piping or component is not installed in an onboard system.
Test-Soap	A method of determining the tightness of a system by applying a soap and water solution to the system joints while the system is being either pressure or vacuum tested. The test is held a sufficient length of time to permit a thorough examination for leaks. When vacuum testing the leak, the testing solution should be compatible with the system to preclude contamination and will be specified on the applicable Test Pressure Drawings.
Test-Strength and Porosity	A hydrostatic test conducted at a specified strength test or "H" pressure that is above nominal/system operating pressure.
Torque	The twisting force exerted multiplied by the distance through which the force acts. In the Navy, torque is usually measured in foot-pounds or inch-pounds. a. Breakaway Torque. The torque required to start the self-locking fastener moving when the locking element is fully engaged and with no axial load.

Torque (Cont'd)	b. Final Torque. The required torque plus the running torque, when a self-locking fastener is being used. c. Required Torque. The torque in accordance with the design drawing or technical manual requirements, the torque from appropriate torque tables in Submarine Fastening Criteria (Non-Nuclear), Description, Design, and Maintenance, NAVSEA S9505-AM-GYD-010 or the torque in accordance with an applicable approved process instruction. d. Running Torque. The torque required to continue turning a self-locking fastener prior to contact with the seating surface.
Traceability	A positive capability of finding all objective evidence, including receipt inspection data, for a particular piece of material given only the piece of material, marked in accordance with applicable material control standards.
Unrestricted Operation Maintenance Requirement Card	Unrestricted Operations Maintenance Requirement Card for continued unrestricted submarine operations to design test depth. Refer to the SUBSAFE Requirements Manual, NAVSEA 0924-062-0010.
Upgrading	The process of conducting the certification of open-purchased material to controlled material in accordance with the appropriate military and material control standard.
Valve Repair/Restoration/ Overhaul	a. Repair. Any work done to improve the material condition or operation of the valve correcting deficient conditions such that the component may be returned to service, but which, in total does not meet the full intent of the applicable restoration/overhaul technical standard, is considered a repair. b. Restoration/Overhaul. All valve parts replaced or restored to the requirements of the applicable technical standard (e.g., the full intent of the restoration/overhaul technical standard is invoked).
Verification	Certification required to be performed by the craftsman.
Welded Fabrication or Weldment	The construction, alteration or repair of any welded assembly, or parts thereof, by welding and allied processes. Included are all operations such as pre-heat and post-heat treatments, forming, fairing and NDT that must be controlled to obtain weldments suitable for intended service.
Work	a. Any action that actually or potentially changes (including disassembly for the purposes of inspection or repair) the approved configuration of any part, component or ship's system. b. Any action that removes or affects the ship's ability to operate ship's systems or components in accordance with ship's systems/operating manuals or reactor plant manuals. c. Any testing or inspections required to establish, maintain or reestablish certification. d. Any design, engineering, planning or configuration management functions that involve the final review and/or approval of technical information.

Work (Cont'd)

Examples of work include the following:

1. Action which disassembles or removes any part, component or ship's system.

2. Action specified in a Technical Work Document.

3. Any action that removes or affects the ship's ability to operate ship's systems or components in accordance with ship's systems manuals, operating manuals or reactor plant manuals, excluding tagout in accordance with the Tagout Users Manual, including but not limited to:

   (a) Component or system tests.

   (b) Intrusive inspections (such as breaking the plane of electrical panels requiring electrical safety).

   (c) Valve line ups that alter the normal system line up not governed by operating procedures.

   (d) Removing valve hand wheels, disconnecting of reach rods.

Work Center

For FMAs, the individual shops within divisions of the Repair, Weapons Repair Departments, etc. (e.g., 38A, 91A, 72A, 25A). For ships, usually the divisions within a department (e.g., Machinery Division, Sonar Division).

Working Standards (Calibration)

These standards comprise a wide variety of equipment used throughout the laboratory in support of all measurements performed in the laboratory. These standards are used day-by-day in performing calibrations in the Fleet Electronic Calibration Laboratory or Mechanical Instrument Repair and Calibration Shop. Contrast, reference and transfer standards are used less frequently to support and assure the accuracy of working standards within the Fleet Electronic Calibration Laboratory, Mechanical Instrument Repair and Calibration Shop, Fleet Meter Calibration Laboratory or Field Calibration Activity.

VOLUME V

PART I

CHAPTER 1

ORGANIZATIONAL RESPONSIBILITIES

REFERENCES.

(a) NAVSEA T9044-AD-MAN-010 - Requirements Manual for Submarine Fly-By-Wire Ship Control Systems
(b) NAVEDTRA 43523 - Personnel Qualification Standard for Quality Maintenance Program
(c) NAVSEAINST 4790.23 - Baseline Project Management Plan (BPMP)
(d) COMSUBFORINST C5400.30 - Engineering Department Organization Manual
(e) NAVSEA 0924-LP-062-0010 - Submarine Safety (SUBSAFE) Requirements Manual
(f) NAVSEA 0948-LP-045-7010 - Material Control Standard
(g) NAVSEA S9086-CH-STM-020 - NSTM Chapter 074 V2 (Nondestructive Testing of Metals Qualification and Certification Requirements for Naval Personnel (Non-nuclear))
(h) NAVSEA T9074-AS-GIB-010/271 - Requirements for Nondestructive Testing Methods
(i) SECNAVINST 4855.3 - Product Data Reporting and Evaluation Program (PDREP)
(j) NAVSEA S9074-AQ-GIB-010/248 - Welding and Brazing Procedures and Performance Qualification
(k) OPNAVINST 4790.15 - Aircraft Launch and Recovery Equipment Maintenance Program (ALREMP)

1.1 PURPOSE. To provide a list of responsibilities and duties of key personnel within the organizations that are involved in the Fleet Quality Assurance (QA) Program. Responsibilities and/or duties listed in this section are further amplified in other sections of this volume.

1.1.1 Quality Assurance Organization. The QA Program for the Fleet is organized into five levels of responsibility:

a. Fleet.

b. Type Commander (TYCOM).

c. Immediate Superior in Command (ISIC).

d. Ship Commanding Officer/Officer in Charge.

e. Regional Maintenance Center (RMC) Commander/Fleet Maintenance Activity (FMA) Commanding Officer.

1.2 FLEET RESPONSIBILITIES.

1.2.1 Fleet Commander (Fleet). The Fleet is responsible to provide policy and direction for the implementation and operation of the QA program as follows:

a. Promulgate the QA program through the guidelines and procedures of Volume V (Quality Maintenance) of the Joint Fleet Maintenance Manual.

b. Promote effective and consistent use of Volume V (Quality Maintenance) of the Joint Fleet Maintenance Manual by TYCOMs.

c. Ensure the scope of training through fleet schools provides the necessary skills for maintenance and management personnel to successfully support the QA program.

d. Jointly authorize changes to this volume after evaluation and analysis of proposed changes by each TYCOM.

e. Review TYCOM QA program by sponsoring an annual Quality Assurance Officer (QAO) Conference/Symposium, inviting TYCOM QAO and Naval Sea Systems Command (NAVSEA) technical authorities. The stated purpose should be to establish common trends, discussions of various QA concerns, improvements, and required actions.

f. Ensure assessments of FMAs and RMCs occur in accordance with Volume IV, Chapter 2, paragraph 2.1.1 of this manual.

1.3 TYPE COMMANDER RESPONSIBILITIES.

1.3.1 Type Commander. TYCOMs are responsible for the following:

a. (Submarines only) Obtain NAVSEA approval for exception to Re-Entry Control (REC) requirements.

b. Administer a Departure from Specification (DFS) system to:

(1) Establish and maintain an auditable method of processing requests for approval of DFS.

(2) Review and evaluate DFS requests and obtain clarification of technical specifications from NAVSEA where appropriate.

(3) Approve or disapprove DFS requests.

(4) Obtain NAVSEA approval of DFS when required by the appropriate NAVSEA technical specification or manual.

(5) Keep NAVSEA informed of all major DFS requests.

(6) Provide a periodic status report of all outstanding major DFS to ISIC Material Officers for their action to ensure their records agree with TYCOMs and to pursue DFS clearance.

(7) Conduct liaison with NAVSEA on outstanding major DFS requiring NAVSEA action. Provide a periodic status report to NAVSEA of those DFS for which NAVSEA action is overdue.

(8) Ensure outstanding DFS for deploying/returning ships are passed between parent and deployed ISICs as required by paragraph 1.4.1.g.(6) of this chapter.

(9) (Surface Ships/Aircraft Carriers only) Maintain a file of all outstanding DFSs.

c. Perform assessments of nuclear FMAs annually, not to exceed 18 months.

d. (Submarines only) Perform assessments of ISICs annually not to exceed 18 months.

e. Perform assessments of FMAs non-nuclear programs annually not to exceed 18 months.

f. At the discretion of the TYCOM perform random, unannounced ISIC, FMA and ship QA assessments and monitor visits.

g. Review and evaluate FMA and ISIC reports of corrective action taken on QA assessments to ensure compliance with this program.

h. (Submarines only) Maintain a system to provide Submarine Safety (SUBSAFE) certification for submarines.

i. Perform an annual self evaluation of the QA program and provide a copy to the Fleet QAO. For Submarine TYCOMs, the self assessment will also include SUBSAFE, Submarine Fly-By-Wire Ship Control System (FBW SCS) and Deep Submergence Systems programs and a copy of the assessment should be forwarded to NAVSEA.

j. Evaluate and analyze proposed changes to this volume.

k. (Submarines Only) Perform annual SUBSAFE/Scope of Certification (SOC)/FBW SCS awareness training for staff members that routinely review SUBSAFE/SOC/FBW SCS Objective Quality Evidence, make determinations on SUBSAFE/SOC/FBW SCS DFSs and perform other SUBSAFE/SOC/FBW SCS work oversight functions.

l. (Submarines only) For FBW SCS, develop and implement the necessary instructions and procedures to meet the requirements of reference (a) and to ensure these requirements are adhered to during the life cycle of the ship.

m. (Submarines only) Maintain FBW SCS certification in accordance with reference (a). In relation to the planning and performance of post Upgrade/Alteration or Major Repair Work Sea Trials for maintaining FBW SCS certification of previously certified submarine FBW SCS, TYCOM shall:

(1) Approve at-sea testing developed by the In-Service Engineering Activity (ISEA) following Upgrade/Alteration or Major Repair Work and apply appropriate restrictions and in each message state that ship's speed is restricted to 20 knots or less when an FBW SCS fault condition results in a major nonconformance affecting control of ship’s pitch, heading, depth and control surfaces. The ship's speed is restricted to 20 knots or less until satisfactory resolution of the major non-conformance and TYCOM approval to operate the FBW SCS to previously authorized conditions is granted, unless specifically addressed in the Sea Trial agenda or as stated in Departure From Specifications/Deviations/Waivers.

(2) Following verification from the ISIC of satisfactory completion of all at-sea testing, correction of all mandatory deficiencies, receipt of certification that the FBW SCS material condition of those parts of the ship installed, repaired and/or tested by the ISEA/activity performing the work is satisfactory, and upon confirmation that FBW SCS certification was not affected for those portions of ship FBW SCS not affected by the ISEA/activity performing the work, issue a message to the ship, with copies to Chief of Naval Operations, ISIC and NAVSEA, certifying the FBW SCS and authorizing FBW SCS unrestricted use in support of submarine unrestricted operations or specifically identify any operating restrictions of the ship and/or system.

1.4 IMMEDIATE SUPERIOR IN COMMAND RESPONSIBILITIES.

NOTE: (SUBMARINES ONLY) WHEN ISIC FUNCTIONS ARE DELEGATED OUTSIDE OF THE SQUADRON (NAVAL SUBMARINE SUPPORT COMMAND, SUBMARINE SQUADRON SUPPORT CENTER, ETC.) THERE MUST BE A FORMAL TRANSFER OF RESPONSIBILITY VIA A MEMORANDUM OF AGREEMENT (MOA) OR OTHER FORMAL METHOD.

1.4.1 Immediate Superior in Command. ISICs are responsible to the TYCOM for the following:

a. Organize and implement a QA program to carry out the provisions of this volume.

b. (Submarines only) Organize and implement a program to verify performance of required maintenance to sustain the material condition necessary to support Unrestricted Operations (URO) to authorized operating depth in accordance with the applicable class URO Maintenance Requirement Card (MRC) manual, and this volume.

c. (Submarines, Aircraft Carriers, Readiness Support Groups and RMCs only) Organize and implement a work request screening process such that those jobs requiring special controls are recognized and the supporting technical documentation is provided to the maintenance activity as required by this volume.

d. (Submarines only) Review Ship's Force Controlled Work Packages (CWP) for FMA accomplished nuclear work as required by Part I, Chapter 2, Appendix D, Technical Work Document (TWD) Review and Approval matrix, of this volume.

e. (Submarines only) Ensure ship's certification continuity report, when required by this volume, is received before the ship is underway. Review the ship's underway certification continuity report to ensure that it is in the proper format and includes all reports required. In particular, the ISIC will ensure all URO planned maintenance is up to date. Discrepancies noted must be resolved prior to underway.

f. Review and sign the MOA required by Volume II, Part I, Chapters 3 and 4, of this manual. This agreement will list the responsibilities and actions of each party before start of any availability (e.g., unscheduled availabilities, Tiger Team repairs, technical assist visits) that involves work within SUBSAFE, FBW SCS, nuclear or Level I certification boundaries to ensure responsibilities for recertification of work performed is not split between maintenance activities and that each activity is responsible to certify the work they performed.

g. (Submarines only) Administer a DFS system to:

(1) Establish and maintain system of processing requests for DFSs.

(2) Review and evaluate DFS requests and obtain clarification of technical specifications from TYCOM/NAVSEA where appropriate.

(3) Approve or disapprove DFS requests.

(4) Obtain TYCOM/NAVSEA approval of DFS when required by the appropriate TYCOM/NAVSEA directive, technical specification or manual.

(5) Ensure the deployed ISIC directing the supporting FMA will act as the cognizant ISIC for those actions required to approve, review and track DFSs for ships deployed.

(6) The parent ISIC will provide a complete file of all outstanding DFSs to the deployed ISIC, prior to any ship deployment. The deployed ISIC will provide a complete file of all outstanding DFSs to the parent ISIC at the end of deployment.

(7) Specify procedures for:

(a) Submission of OPNAV form 4790/2K for DFS that require a future maintenance action to clear the departed condition.

(b) Submission of OPNAV form 4790/CK for permanent repair DFS which result in new Allowance Parts List and Coordinated Shipboard Allowance List support requirements.

(8) Keep parent ISIC apprised on the status of DFSs for deployed units.

(9) Maintain files of outstanding DFSs.

(10) Aggressively pursue clearing of DFSs.

h. Monitor the QA program and procedures of assigned FMA periodically and monitor corrective actions on discrepancies noted during the last TYCOM audit. (Submarines only) Naval Submarine Support Command New London will monitor Naval Submarine Support Facility New London.

i. Schedule and conduct a QA Program assessment in conjunction with the Inter-Deployment Training Cycle (or as determined by each TYCOM) of all assigned ships to ensure the repair actions undertaken by Ship's Force conform to the provisions of the QA Program as well as pertinent technical requirements.

j. Review and endorse TYCOM audit report of assigned FMA(s).

k. Conduct periodic monitoring of Ship's Force work and QA program on all assigned ships during maintenance periods.

(1) Perform at least one surveillance during each refit/upkeep/FMA availability.

(2) Conduct monitoring during industrial availabilities (e.g., Selected Restricted Availability, Drydocking Selected Restricted Availability, Extended Refit Period, Post Shakedown Availability, Phased Maintenance Availability, Docking Phased Maintenance Availability, Depot Modernization Period, Engineered Refueling Overhaul and Regular or Refueling Overhaul).

l. (Submarines only) Perform annual SUBSAFE/SOC/FBW SCS awareness training for staff members (Submarine Squadrons and associated Naval Submarine Support Centers and Performance Monitoring Teams to include Weapons, Combat Systems and Material Departments with the associated Chain of Command) that routinely review SUBSAFE/SOC/FBW SCS objective quality evidence, make determinations on SUBSAFE/SOC/FBW SCS DFSs, perform other SUBSAFE/SOC/FBW SCS work oversight functions.

m. (Submarines only) Conduct an oral interview of relieving Ship's Force QAO which covers the following topics as a minimum:

(1) URO Program Management including a review of the ship's current URO Schedules and Inventories and completion procedures.

(2) DFS Program Management including a review of all outstanding departures.

(3) QA Training and Qualification Program.

(4) QA Surveillance and Assessment Program including a review of the ship's last ISIC QA Assessment and corrective actions.

(5) CWP opening and closing review processes.

n. Ensure fact-finding critiques are held to establish underlying causes and pursue corrective actions when major errors, mistakes or problems occur during maintenance that affect Nuclear, Level I, Submarine Flight Critical Components (SFCC), Deep Submergence System (DSS)/SOC or SUBSAFE work, or result in serious damage to equipment or injury to personnel. Contact the TYCOM immediately for issues which will result in a SUBSAFE/FBW SCS/DSS/SOC critique, SUBSAFE/FBW SCS/DSS/SOC trouble report, and/or SUBSAFE/FBW SCS/DSS/SOC fact-finding and send a copy of the report to the TYCOM electronically.

o. (Submarines only) ISIC responsibilities. Maintain FBW SCS certification in accordance with reference (a). In relation to the planning and performance of post Upgrade/Alteration or Major Repair Work Sea Trials, for maintaining FBW SCS certification of previously certified submarine FBW SCS, the ISIC shall:

(1) Provide sufficient time for crew training during the Upgrade/Alteration or Major Repair Work period to permit Ship's Force to attain a level of knowledge and proficiency of the FBW SCS adequate to ensure proper operation and safety of the ship and its personnel during Sea Trials. ISIC shall also ensure crew has proper number of trained operators.

(2) Conduct FBW SCS Certification Audits of Upgrade/Alterations or Major Repair Work and issue report to the activity. Audits shall be conducted using the TYCOM provided FBW Certification Audit Checklist at a minimum. Provide a copy of the FBW SCS Certification Audit Report to the Supervising Authority, ship's Commanding Officer, TYCOMs, Fleet Commanders and NAVSEA.

(3) Following Upgrade/Alteration or Major Repair Work report, by message, crew readiness and prior to each underway until certified, verification from the ISEA/activity performing the work that all work performed by the ISEA/activity performing the work necessary for at-sea testing or Sea Trials has been completed, including resolution of ISIC FBW SCS Certification Audit Deficiencies recommendations and status of incomplete ISIC FBW SCS Certification Audit Category Deficiencies, and that the material condition of those parts of the ship installed, repaired, and/or tested by the ISEA/activity performing the work is satisfactory, certify to the TYCOM, with information copies to the Chief of Naval Operations, the appropriate Fleet Commander and NAVSEA, that the FBW SCS material condition of those parts of the ship installed, repaired and/or tested by the ISEA/activity performing the work is satisfactory for Sea Trials in accordance with approved at-sea tests or Sea Trial agenda.

(4) Following verification from the ISEA/activity performing the work of satisfactory completion of all at-sea testing or trials, completion of controlled dives, correction of all mandatory Sea Trial deficiencies, and resolution of all ISIC FBW SCS Certification Audit Category IA recommendations, certify to the TYCOM, with information copies to Chief of Naval Operations, the appropriate Fleet Commander and NAVSEA, the FBW SCS material condition of those parts of the ship installed, repaired, and/or tested by the ISEA/activity performing the work is satisfactory, and recommend authorization for FBW SCS unrestricted use in support of submarine unrestricted operations, subject to ISIC verification that FBW SCS certification of areas outside ISEA/activity performing the work tasking has been sustained, or specifically identify any operating restrictions of the ship and/or system.

1.5 SHIP RESPONSIBILITIES.

1.5.1 Ship's Commanding Officer. Commanding Officer is responsible to:

a. Designate a QAO in writing.

b. Approve Technical Work Document (TWD) as required in Part I, Chapter 2, Appendix D, TWD Review and Approval matrix, of this volume.

c. (Submarines only) Provide the ISIC a written report of ship's certification continuity prior to underway, as specified in Part I, Chapter 5, paragraph 5.10.7 of this volume.

d. (Submarines only) Organize and implement a program to ensure performance of required maintenance to sustain the material condition necessary to support URO to authorized operating depth in accordance with the applicable class URO MRC manual and Volume VI of this manual.

e. (Submarines only) Approve and sign all recertification Reactor Plant Work Accomplishment Reports (RPWAR) and ensure these documents are forwarded to the Reactor Plant Planning Yard with copy to NAVSEA Nuclear Propulsion Directorate (08), TYCOM and ISIC.

f. Certify all QA personnel qualifications (respective Department Head on Aircraft Carriers).

g. Review and sign with the shipyard or other industrial activity, RMC/FMA and ISIC, an MOA on responsibilities and action of each party with respect to work accomplishment prior to start of SUBSAFE, nuclear, FBW SCS or Level I work in accordance with this manual.

h. Approve DFSs in accordance with Part I, Chapter 8 of this volume.

1.5.2 Ship's Executive Officer. Executive Officer is responsible for the following:

a. Monitoring the QAO's administration of the ship's QA Audit, surveillance, training and qualification programs.

b. Providing senior command level authority to backup the QAO in the performance of the QAO's duties.

c. Spot checking performance of QA training by attending/monitoring training periodically.

d. Assigning an Assistant Quality Assurance Officer (AQAO) who is an E-6 or above to be an administrative assistant to the QAO.

1.5.3 Ship's Department Head. Department Heads are responsible to:

a. Ensure area(s) in or adjacent to their work centers/divisions/spaces are designated for the stowage of controlled material in accordance with Part I, Chapter 6 of this volume.

b. Review or approve Formal Work Package (FWP) and TWD as required in Part I, Chapter 2, Appendix D, TWD Review and Approval matrix, of this volume.

c. Ensure personnel in their departments involved in performing, planning, approving or supervising shipboard maintenance on SUBSAFE, nuclear, FBW SCS and Level I systems participate in QA training.

d. Verify the department maintains sufficient numbers of qualified Quality Assurance Inspectors (QAI) and Controlled Material Petty Officers (CMPO).

e. Participate in oral examination of shipboard QAI and Quality Assurance Supervisor (QAS) assigned to their departments.

f. Ensure personnel within their departments perform QA surveillance, qualification, training, etc. as defined in this volume.

g. Review and approve information submitted to the FMA for identification of controlled work. This information must include a TWD serial number when required by Part I, Chapter 2 of this volume. This review will also ensure that the work request identifies specific categories applicable in each of the following situations as required by this volume:

(1) SUBSAFE.

(2) Level I.

(3) Submarine Antenna Engineering Directorate (SAED).

(4) Nuclear.

(5) Special cleanliness requirements.

(6) Special testing requirements.

(7) Special fabrication requirements.

(8) DFS.

(9) SOC.

(10) SFCC.

h. Ensure fact-finding critiques are held to establish underlying causes and pursue corrective actions when major errors, mistakes, or problems occur during maintenance that affect Nuclear, Level I, SFCC, DSS/SOC or SUBSAFE work, or result in serious damage to equipment or injury to personnel. Contact the ISIC immediately for issues which will result in a SUBSAFE/FBW SCS/DSS/SOC critique, SUBSAFE/FBW SCS/DSS/SOC trouble report, and/or SUBSAFE/FBW SCS/DSS/SOC fact-finding and send a copy of the report to the TYCOM.

i. Review DFS for technical accuracy and sign.

j. Spot check performance of QA training by attending/monitoring training at least quarterly.

k. (Aircraft Carriers only) Certify QA qualifications for personnel assigned to their department by signing the applicable Personnel Qualification Standard cover sheet of reference (b).

1.5.4 Ship's Supply Officer. The Supply Officer is responsible to:

a. Ensure procurement, receipt and stowage of Nuclear, SUBSAFE, SFCC, SAED - Submarine Antenna Quality Assured Material and Level I materials are in compliance with this volume, applicable material control standards and instructions.

b. Designate and maintain areas for stowage of Level I/SUBSAFE (LI/SS) stock program material, SFCC and Nuclear Repair Parts (NRP) in the custody of the supply department.

c. File the Supervisor of Shipbuilding letter of certification for Level I, SUBSAFE, SFCC and NRP which are in the custody of the supply department.

d. Turn over the material certification documentation (or copy of, when only partial issue of lot) for LI/SS/SEAWOLF Class Component (SW)/VIRGINIA Class Component (VU) stock program material and NRP to the customer.

e. Send LI/SS stock program material, NRP, SW, VU and copies of material certification documents to FMA work centers when the ship is providing the material.

f. Ensure copies of the material certification documents are forwarded to the requesting activity, when LI/SS stock program material, SFCC and NRP items are removed from own ship's systems or from onboard repair parts.

g. Return defective LI/SS stock program material, SW, VU and NRP to the Navy supply system and submit defective material reports in accordance with supply department procedures.

h. Ensure appropriate supply department personnel receive training on nuclear and non-nuclear controlled material certification, procurement, receipt inspection and LI/SS stock program material, SW, VU and NRP stowage requirements.

1.5.5 Ship's Engineer Officer (Submarines only). The Engineer Officer is responsible to:

a. Submit blank RPWAR forms to the FMA with each work request and CWP serial number, when FMA assistance is necessary for reactor plant SUBSAFE work. Ensure all work requests requiring special reactor plant SUBSAFE work controls are properly identified.

b. Verify continuity of reactor plant SUBSAFE certification by controlling and documenting work and tests performed for each Re-Entry.

c. Review and sign the necessary recertification information on the applicable RPWAR pages for repairs requiring RPWAR submission and forward the original to the Reactor Plant Planning Yard with a copy to NAVSEA 08, TYCOM and ISIC.

d. Maintain current the reactor plant hull integrity records using the completed RPWAR, filed in an auditable manner with the latest revision of the NAVSEA drawing "Status of Reactor Plant Work Accomplishment Reports for (individual ship)". Reproducible blank RPWAR will also be maintained in this same file to support future maintenance. Documentation of the actual maintenance performed and testing accomplished by Ship's Force is to be maintained in the ship's completed CWP file required by this volume.

e. Review or approve Oxygen, Nuclear and SUBSAFE CWPs as required by Part 1, Chapter 2, Appendix D of this volume.

f. Coordinate with the Ship's QAO and Engineering Department Master Chief to incorporate QA training as required by Part I, Chapter 3 and Part III, Chapter 3 (as applicable) of this volume and reference (a) (as applicable) into the Engineering Department Training Plan.

1.5.6 Availability Coordinator (Submarines only). A submarine served, nuclear trained Limited Duty Officer will be assigned to augment the normal ship's complement during Depot Modernization Periods, Engineered Refueling Overhauls, or Engineered Overhauls and will act as the Availability Coordinator for the ship. The Availability Coordinator's responsibilities include:

a. Become a knowledgeable member of the availability project team.

b. To support these requirements, the Availability Coordinator will be assigned as early as possible during the pre-availability test and inspection period, nominally 15 months before the availability starts. Prior to reporting to the submarine, the Availability Coordinator will be trained in shipyard processes and Availability Work Package requirements in accordance with reference (c), Appendix H. After reporting to the submarine, the Availability Coordinator should spend a significant portion of his time working with the shipyard project team prior to the start of the availability. This may require that he remain ashore during key pre-availability planning phases while the submarine is at sea. Finally, to prevent interference with his responsibilities for availability planning and execution, the Availability Coordinator should not be assigned routine watch standing duties. He should maintain proficiency requirements (about two watches per month), but his watch standing duties should not interfere with daily project management routine or the increased pace of coordination associated with major key events (e.g., undocking).

c. Educate/train Ship's Force on shipyard tools and processes to be used during the availability. This responsibility does not circumvent the requirements placed on the industrial activity to train Ship's Force, but the Availability Coordinator will coordinate and complement the training provided by the industrial activity.

d. Coordinate the integration and execution of Ship's Force responsibilities during the availability planning and execution.

e. Act as the primary liaison between Ship's Force and the shipyard project team.

1.5.7 Ship's Maintenance Manager (Aircraft Carriers only). Maintenance Manager is responsible to establish and maintain a Quality Deficiency Reporting Program for resolving quality issues for work performed by outside activities and to ensure that each work request/job order is screened for Quality Control/QA requirements and marked up or stamped as to specific category applicable in each of the following situations as required by this volume:

a. Nuclear.

b. Level I.

c. Special cleanliness requirements.

d. Special testing requirements.

e. Special fabrication requirements.

1.5.8 Ship's Principal Assistant. Principal Assistants will be responsible for duties as assigned by the Engineer/Reactor Officer.

1.5.9 Ship's Division Officer. Division Officers are responsible to:

a. Review TWD as required in Part I, Chapter 2 Appendix D, TWD Review and Approval matrix, of this volume.

b. Review the FWP as required in Part I, Chapter 2, paragraph 2.3.4 of this volume.

c. Verify controlled work is accomplished in accordance with an approved CWP.

d. Ensure personnel assigned to their divisions perform QA surveillance, qualification, training, etc. as defined in this instruction.

e. Supervise QA training of division personnel.

f. Provide timely response to QA 14, indicating root cause analysis and actions taken.

1.5.10 Ship's Work Center Supervisor. Work Center Supervisor is responsible to:

a. Review the FWP as required in Part I, Chapter 2, paragraph 2.3.4 of this volume.

b. Have TWD prepared, when designated the Lead Work Center (LWC), and as required by Part I, Chapter 2, paragraph 2.2 of this volume:

(1) Verify the FWP provides the correct written instructions both in sequence and requirements to satisfactorily accomplish the controlled work.

(2) Verify the FWP contains/lists the correct technical specifications or requirements (e.g., torque values, dimensions, Nondestructive Testing (NDT) inspection, special cleanliness, recertification test) for certification attributes to be documented on the appropriate QA form.

(3) Ensure signatures for repair work attributes are annotated as requiring Certification Signature Block (CSB) or signature, as applicable, on the QA form and in the FWP as discussed in Part I, Chapter 2 of this volume by use of (R), (S), (C), (I), (Q) and (V) in the margin by the appropriate step.

c. Ensure all controlled work is accomplished in accordance with approved CWP.

d. Ensure proper work authorizations have been obtained prior to starting work.

e. Ensure tools, measuring and test equipment used during maintenance and testing are of proper range, scale and in calibration.

f. Conduct QA training of work center personnel.

g. Ensure work center personnel are properly trained and qualified, if required, prior to assignment to tasks requiring QA and/or special cleanliness (e.g., oxygen, hydrogen, reactor plant, steam plant) certifications.

h. Ensure only material specified by the applicable drawings, standards, or specifications is ordered and installed.

i. Submit request for use of rejected material using a Reject Tag (QA form 3).

j. Obtain written permission from the QAO to downgrade LI/SS stock program material, NRP, or controlled material for non-level use.

k. Supervise QA programs within assigned work centers.

l. Review work for satisfactory completion.

m. Ensure CWPs for completed controlled work are complete, properly reviewed and forwarded with all certifying documents.

n. Initiate a DFS for non-nuclear or Liaison Action Request (LAR) for nuclear tests, inspections, material or other requirements of any maintenance action in which the requirements were not met.

1.5.11 Ship's Craftsman. Craftsman is responsible to:

a. Perform all maintenance actions in accordance with the approved procedure. If that guidance is either incorrect, incomplete or unclear, stop and seek clarification from the work center or shift supervisor.

b. Ensure QA forms associated with the maintenance are correctly completed in accordance with the applicable sections of this volume.

c. Enter signature, printed name and date on all QA data forms completed.

d. Initiate a DFS for non-nuclear or LAR for nuclear tests, inspections, material or other requirements of any maintenance action in which the requirements were not met.

e. Ensure only Test, Measuring and Diagnostic Equipment (TMDE) (i.e., measuring devices, instruments, inspection tools, gauges, jigs or fixtures), which have current calibration stickers/records attached or available, are used for production, acceptance and testing. Uncalibrated/untested TMDE will be tagged and removed from service immediately.

1.5.12 Ship's Quality Assurance Officer. QAO is responsible to:

a. Administer the ship's QA program.

b. Review TWD as required in Part I, Chapter 2, Appendix D, TWD Review and Approval matrix, of this volume.

c. Review the FWP as required in Part I, Chapter 2, paragraph 2.3.4 of this volume.

d. Verify the FWP, in the CWP, specifies the correct OQE that is to be generated to prove recertification of the system or component.

e. Verify the testing requirements for controlled work, called out in the FWP, are correct and in accordance with the latest applicable specifications as required by Part I, Chapter 2, paragraph 2.3 of this volume.

f. Verify completed test results for controlled work fully satisfy test requirements, or corrective action is taken.

g. Review and close out all TWDs for work on systems or components required for reactor plant startup, propulsion plant startup or ship's underway operations (e.g., if the work is on a spare component it may not be necessary to close the TWD) prior to startup or getting underway.

h. Maintain the following record files in accordance with Part I, Chapter 10, paragraph 10.5 of this volume:

(1) Completed CWPs.

(2) QA Assessments, audits, surveillance and deficiency correction.

(3) Controlled material.

i. Determine suitability for use of Level I, SUBSAFE, SOC, SFCC or Nuclear Level I material from another ship in own ship's system, when the transfer is directly from the donating ship.

j. Provide disposition instructions for material rejected at receipt inspection.

k. Obtain chemical analysis, NDT, destructive testing and generic materials identity testing results as required by Part I Chapter 6 of this volume to certify material for use in a certified (e.g., Level I, SUBSAFE, Nuclear, Scope of Certification) system.

l. Provide technical services to the Supply Officer for determining material requirements.

m. Authorize downgrading of LI/SS stock program material, NRP or controlled material for non-level use.

n. Review requests for DFS for accuracy and technical merit, and forward to Department Head.

o. Maintain an auditable file of outstanding DFS and the record of DFS numbers assigned. Prior to each underway following any scheduled Fleet/Chief of Naval Operations Maintenance Availability, the ship's QAO will audit active DFSs against associated Job Control Numbers to verify a current up to date entry in the Current Ship's Maintenance Project exists.

p. Maintain a file of DFS which have been approved as permanent repairs and result in change in configuration until they are reflected in ship's drawings.

q. Verify ship's mapping plans and selected records and drawings are updated (marked up) when approved DFS authorize a change in configuration as a permanent repair.

r. Submit DFS clearance reports, using Departure Clearance Report (QA form 12A) to the approving authority when the work was done which corrects specific DFS. If unable to use a QA form 12A, use the message format of Part I, Chapter 8, Appendix B, of this volume.

s. Manage the ship's internal QA Audit and Surveillance program as required by Part I Chapter 9 of this volume. Coordinate with the ship's Executive Officer to resolve surveillance scheduling and accomplishment problems.

t. Ensure that QA training is conducted as required by Part I, Chapter 3 and Part III, Chapter 3 (as applicable) of this volume and reference (a) (as applicable). The QAO will coordinate with the Ship's Engineer and Engineering Department Master Chief to incorporate these requirements into the Engineering Departmental Training Plan. The QAO will attend QA training when practical.

u. Assess QA training and provide input to Engineering Department Master Chief and Ship's Engineer for incorporation into the periodic Engineering Department Training assessment as required by reference (d).

v. Implement a formal qualification program for QAIs, CMPOs, Cleanliness Inspector/Certifiers, QASs, Work Center Supervisors and Maintenance Planners (if assigned).

w. Conduct oral qualification interviews for QAIs/QASs/CMPOs/Cleanliness Inspector/Certifiers, Work Center Supervisors and Maintenance Planners.

x. Maintain a current master list of qualified CMPOs/Controlled Material Handlers (CMH), Cleanliness Inspectors, QAIs, QASs (if assigned), Oxygen Clean Workers, Oxygen Clean Instructors, Work Center Supervisors and Maintenance Planners as specified in Part I, Chapter 10 of this volume.

y. (Submarines only) Verify all reactor plant hull integrity area maintenance is accomplished in accordance with appropriate directives.

z. (Submarines only) Verify REC is initiated for work within the SUBSAFE boundary (unless REC exception as specified in reference (e)).

aa. (Submarines only) Maintain SUBSAFE REC records including the CWP log.

ab. (Submarines only) Coordinate with the ISIC and the FMA to ensure the administration, scheduling and reporting of the URO MRC program is in accordance with the applicable class URO MRC manual, and this volume.

ac. (Submarines only) Retain any QA form 34 generated in connection with controlled assembly performed as a REC exception in accordance with Part I, Chapter 5, paragraph 5.10.6, Note 3 of this volume.

ad. Review in detail as many non-nuclear NDT weld records as possible (minimum of 10 percent per year) to ensure that all of the requirements of the applicable fabrication documents have been and are continuously being met.

ae. Verify an active Job Control Number exists for all active temporary DFSs at the completion of all scheduled Fleet Maintenance Activity Availabilities, major or minor, Chief of Naval Operations availabilities or at least quarterly and maintain an auditable record of the verification until superseded.

1.5.13 Ship's Assistant Quality Assurance Officer. A QAO is responsible to perform duties as assigned by the QAO.

1.5.14 Ship's Quality Assurance Supervisor. QAS, if assigned, will perform the duties as specified in paragraph 1.6.12 of this chapter.

1.5.15 Ship's Quality Assurance Inspectors. QAIs are responsible for coordinating and administering the QA Program within their respective work centers. The QAI will:

a. Develop a thorough understanding of the QA program.

b. After verifying work completed, enter initials or signature (as required by the form, tag or procedure), and the date on all applicable QA forms/tags and CWP steps.

c. Verify QA form 2 is filled out correctly and attached to items removed from a controlled system for transfer to another Fleet activity and ensure items received from another ship have QA form 2 tags attached.

d. As LWC QAI, review each CWP prepared which requires QAI CSBs to verify inspection requirements are adequately addressed before submission to QAO and/or Department Head as required by Part I, Chapter 2, Appendix D, of this volume.

e. Verify all work inspected meets the minimum requirements set forth in latest applicable plans, specifications and directives of higher authority as stated in the FWP.

f. Perform QA inspections of certification attributes as required by Part I, Chapter 5, of this volume.

g. Ensure all inspections beyond the capability of the QAI are performed by FMA inspectors prior to final acceptance/installation of the product by the ship.

h. Ensure only TMDE (i.e., measuring devices, instruments, inspection tools, gauges, jigs or fixtures), which have current calibration stickers/records attached or available, are used for production, acceptance and testing. Uncalibrated/untested TMDE will be tagged and removed from service immediately.

i. Ensure items removed from controlled systems are tagged with QA form 2 when required by Part I, Chapter 6 of this volume. Tags are not required if material is nuclear non-Level (Level N/A) or non-nuclear non-level.

j. Ensure controlled material (SUBSAFE, Level I, Nuclear Level I, Scope of Certification) delivered to a RMC/FMA work center for work is tagged with a QA form 2.

k. Report all work and testing discrepancies/deficiencies to the department head and the QAO via chain of command. Ensure the deficiency is resolved before work continues.

l. Sign QA form 2 when controlled material is installed for SUBSAFE and nuclear systems.

m. As LWC QAI, review all completed QA forms and data sheets for accuracy, completeness and technical correctness.

n. Reject untraceable, damaged, or unclean controlled material using a material reject tag (QA form 3).

o. Witness controlled assemblies, as a second party not involved in the actual work.

p. (Submarines only) Complete the necessary recertification information for maintenance performed by Ship's Force; for material changes/replacement, material generic identification (if not previously documented) or fastener torque on the applicable blank RPWAR pages and submit to the Engineer Officer for review prior to approval by the Commanding Officer. The general notes for report preparation and use, supplied with each RPWAR, will be used in completing the recertification form.

q. Review certification testing as part of CWP preparation.

r. Witness and document results of tests (hydrostatic, drop, joint tightness). Work center tests of components conducted by the FMA need not be witnessed, unless directed by the Department Head or FMA CWP. Promptly inform supervisors of unsatisfactory test results. Ensure test documentation is complete and accurate.

s. Review DFS/LAR prepared by the work center for accuracy and technical merit, and forward to the Division Officer and QAO.

1.5.16 Ship's Controlled Material Petty Officer. CMPOs are responsible to:

a. Ensure all material under their cognizance is stored and controlled to the requirements of references (a) or (e).

b. Receipt inspect all LI/SS stock program material, SFCC and NRP received by work center/division.

c. Request disposition instructions for rejected material.

d. Remove QA form 3 from previously rejected and now accepted controlled material, annotate the material acceptance on the QA form 2 and file the QA form 3 with the CWP.

e. Maintain custody of controlled material in segregated stowage in accordance with reference (f).

f. Inspect controlled material storage areas of their work center semi-annually, as a minimum in accordance with Part I, Chapter 6 of this volume.

g. Ensure controlled material is properly stowed and handled so the identification of the subject material and its certification are always maintained.

h. Ensure nuclear material received without Ready for Issue tags is certified to the required "Level of Essentiality".

i. Reject unsatisfactory material. Fill out and attach QA form 3 and request disposition instructions.

j. Send any material certification documents for material which has been provided by the ship to the RMC/FMA QA office. Ship should retain original.

k. Perform receipt inspection of package alteration kits that contain controlled material when ready for use.

l. Ensure controlled material markings are on all pieces when cutting a smaller piece from a larger one.

m. Ensure controlled material markings are moved to an unaffected area, if the controlled material item will lose the markings due to a fabrication process (e.g., welding, machining) prior to the fabrication process.

n. Ensure all controlled material is identified, color coded, marked and tagged as required by this volume and the applicable material control standard.

1.5.17 Ship's Cleanliness Inspector/Certifier. Cleanliness Inspectors/Certifiers are responsible to perform initial, in process and final cleanliness inspections during maintenance/repairs for those systems requiring cleanliness controls per Part I, Chapter 5, paragraph 5.8, of this volume.

1.5.18 Ship's Nondestructive Test Examiner. The ship's NDT Examiner shall be appointed in writing by the Commanding Officer and shall be responsible for all aspects of the command's Nondestructive testing program. NDT Examiner qualification and certification requirements are specified in reference (g). The following shall comprise the core responsibilities of the ship's NDT Examiner:

a. Coordinate the efforts of other assigned NDT examiners at the activity.

b. Act as the command's point of contact for NDT technical issues. In addition, act as the command's point of contact with NAVSEA for NDT issues.

c. Develop the command's NDT examiner guidelines, to include the command's written practice for NDT certification when required by reference (h) utilizing the input of all participating NDT examiners.

d. Ensure submittal of required reports of certification or re-certification to higher authority as required by reference (i).

e. Review all requests for NDT training courses and examiner certification services. Provide recommendations to the chain of command regarding eligibility of the requestor, and the need for such training or certification based on current and projected NDT personnel resources.

f. Approve examination material for all NDT methods utilized at the activity for which they are certified. Ensure examination material reflects changes made to applicable fabrication documents.

g. Approve, and qualify NDT procedures for each method utilized at the activity. Revise and approve procedures as necessary when changes are made to applicable fabrication documents.

h. Schedule and perform NDT Inspector surveillance. Maintain records of surveillance in order to perform trend analysis of inspector abilities and program effectiveness.

i. Schedule and administer NDT examinations. Maintain records of examinations sufficient to trace inspector qualifications to original examination material. Maintain a matrix of high miss questions in order to assess inspector knowledge and program effectiveness.

j. Train, certify and monitor NDT Inspectors as required by applicable specifications and Part I, Chapter 3 paragraph 3.2.2 of this volume.

k. Schedule eye examinations for NDT Inspectors.

l. Ensure each NDT Inspector's service record is kept updated with qualification status.

m. Maintain individual records of qualification for NDT inspectors.

n. Monitor the welder/brazer qualification and training per reference (j).

o. Review all welder/brazer qualification records for completeness, semi-annually.

p. Review completed NDT inspection reports for technical completeness and accuracy and sign, where indicated on the report, on completion of work.

q. Review, approve and monitor the command's welder/brazer training and qualification program as required by reference (j).

r. Prepare and execute the training and qualification program for each NDT method that leads to inspector certification in each method and maintains inspector competency in each method.

1.5.19 Ship's Nondestructive Test Inspector. NDT Inspectors are responsible to:

a. Verify CWPs which include NDT inspections properly identify the inspection requirements and acceptance criteria.

b. Ensure NDT inspections are completed correctly and in accordance with the applicable requirement and inspection reports are technically complete and accurate.

c. Ensure use of only TMDE (i.e., measuring devices, instruments, inspection tools, gauges, jigs or fixtures), which have current calibration stickers/records attached or available, for production, acceptance and testing. Uncalibrated/untested TMDE will be tagged and removed from service immediately.

d. When no NDT Examiner is assigned, monitor the welder/brazer qualification and training per reference (j).

1.5.20 Engineering Department Master Chief. The Engineering Department Master Chief is responsible to coordinate with the Ship's Engineer and QAO to incorporate the QAO provided training as required by Part I, Chapter 3 and Part III, Chapter 3 (as applicable) of this volume and reference (a) (as applicable) into the Engineering Department Training Plan.

1.6 REGIONAL MAINTENANCE CENTER/FLEET MAINTENANCE ACTIVITY RESPONSIBILITIES.

1.6.1 RMC Commander/FMA Commanding Officer. Responsible for QA in the maintenance, repair and alteration of fleet ships as follows:

a. Designate the RMC/FMA QAO in writing.

b. (Submarines only) Provide a written report of certification to the tended ship, at the conclusion of a maintenance period and prior to a tended ship's next underway.

c. Certify the qualifications of QA personnel.

d. Ensure the RMC/FMA has an effective audit and surveillance program capable of assessing work performance and identifying areas of poor performance.

e. Initiate a semi-annual evaluation of the RMC/FMA QA Program by the QAO.

1.6.2 RMC Deputy Commander/FMA Executive Officer. Responsible for the following:

a. Monitoring the QAO's administration of the RMC/FMA's QA surveillance, training and qualification programs.

b. Providing senior command level authority to backup the QAO in the performance of the QAO's duties.

c. Spot checking performance of QA training by attending/monitoring training periodically.

d. Assigning an AQAO who is an E-7 or above or a senior civilian to be an administrative assistant to the QAO.

e. Assigning sufficient QASs and QAIs to the QA Division.

1.6.3 RMC Production Officer/FMA Repair Officer. Production Officer/Repair Officer is responsible to:

NOTES: 1. AT TRIDENT REFIT FACILITIES SOME OF THESE RESPONSIBILITIES MAY BE UNDER THE COGNIZANCE OF THE PLANNING OFFICER. HOWEVER, THEY WILL NOT BE DELEGATED TO A LEVEL LESS THAN A DEPARTMENT HEAD.

2. WHERE NOTED, SOME OF THESE RESPONSIBILITIES MAY BE UNDER THE COGNIZANCE OF THE ENGINEERING DEPARTMENT HEAD AT AN RMC.

a. Implement a work request screening process such that jobs requiring special controls are recognized.

b. Implement a QA Program that ensures all work accomplished by the Production/Repair Department meets the material and workmanship requirements of approved plans and specifications.

c. Provide liaison with other department heads when their functions are directly or indirectly related to the QA requirements of the Production/Repair Department.

d. Review and approve TWD as required in Part I, Chapter 2, Appendix D, TWD Review and Approval matrix, of this volume.

e. Review and approve the FWP as required in Part I, Chapter 2, paragraph 2.3.4 of this volume.

f. (Submarines only) Approve and sign all recertification RPWAR and ensure these documents are forwarded to the Reactor Plant Planning Yard with copy to NAVSEA 08, TYCOM and tended ship's parent ISIC.

g. Review all DFS initiated by the RMC/FMA.

h. (Submarines only) Review and approve all LARs initiated by the FMA.

i. Maintain a sufficient number of qualified personnel to adequately staff the QA Division. At RMCs this may be performed by the Engineering Department Head.

j. Implement a formal training and qualification program for all personnel assigned to the Production/Repair Department who perform, plan, and/or supervise controlled work, covering QA requirements and practices.

k. Designate nuclear Metallographic Test Method Examiner and Generic Material Alloy Identification Examiners (as applicable). At RMCs this may be performed by the Engineering Department Head.

l. Verify the RMC/FMA has an effective audit and surveillance program capable of assessing work performance and identifying areas of poor performance. At RMCs this may be performed by the Engineering Department Head.

m. Ensure fact-finding critiques are held to establish underlying causes and pursue corrective actions when major errors, mistakes, or problems occur during maintenance that affect Nuclear, Level I, SFCC, DSS/SOC or SUBSAFE work, or result in serious damage to equipment or injury to personnel. Contact the ISIC immediately for issues which will result in a SUBSAFE/FBW SCS/DSS/SOC critique, SUBSAFE/FBW SCS/DSS/SOC trouble report, and/or SUBSAFE/FBW SCS/DSS/SOC fact-finding and send a copy of the report to the TYCOM. At RMCs this may be performed by the Engineering Department Head.

n. Ensure that each work request/job order is screened for Quality Control/QA requirements and marked up or stamped as to specific category applicable in each of the following situations as required by this manual:

(1) SUBSAFE.

(2) Level I.

(3) SAED.

(4) Nuclear.

(5) Special cleanliness requirements.

(6) Special testing requirements.

(7) Special fabrication requirements.

(8) SOC.

(9) SFCC.

1.6.4 FMA Supply Officer. Supply Officer is responsible to:

a. Designate area(s) for stowage of LI/SS/SW/VU stock program material and NRP in the custody of the supply department.

b. Ensure procurement, stowage, and issue of SAED – Submarine Antenna Quality Assured Material, Nuclear, SUBSAFE, SFCC and Level I materials are in compliance with the applicable material control standards, instructions and this volume.

c. Ensure accompanying certification documents remain with the LI/SS stock program material, SW, VU and NRP for which the supply department has custody.

d. Turn over material certification documentation (or copy, if issuing other than the entire lot) for LI/SS stock program material, SFCC and NRP to the customer.

e. Return defective LI/SS stock program material, SW, VU and NRP to the Navy supply system in accordance with supply department procedures. Submit defective material reports.

f. Ensure appropriate supply personnel receive training on nuclear and non-nuclear material covering material certification, material procurement, receipt inspection, and LI/SS stock program material, SW, VU and NRP stowage requirements.

g. Ensure semiannual inventories of supply's LI/SS stock program material, SW, VU and NRP are conducted.

1.6.5 FMA Nuclear Repair Officer. When assigned, the Nuclear Repair Officer is responsible to:

a. Determine and specify the material requirements and the certification requirements for the NRP to be used in nuclear controlled work.

b. Initiate procurement action for NRP required for accomplishment of nuclear tasks.

c. Review and approve the FWP as required in Part I, Chapter 2, paragraph 2.3.4 of this volume.

d. Prepare and promulgate the CWP, when OQE is required at the conclusion of the nuclear work and as required by Part I, Chapter 2 of this volume.

(1) Verify the FWP is the correct procedure both in sequence and requirements to satisfactorily accomplish the controlled work.

(2) Verify the CWP contains/lists the correct technical specifications or requirements (e.g., torque values, dimensions, NDT inspections, special cleanliness, test) for certification attributes to be documented on the appropriate QA form.

(3) Ensure test requirements for controlled work comply with the latest applicable specifications.

(4) Ensure signatures for repair work attributes are annotated as requiring CSB or signature, as applicable, on the QA form and in the FWP as discussed in Part I, Chapter 2 of this volume by use of (R), (S), (CI), (G), (C), (I), (Q) and (V) in the margin by the appropriate step.

e. (Submarines only) Review and sign the necessary recertification RPWAR pages, as required by Part I, Chapter 5, paragraph 5.11, of this volume for repair/maintenance actions performed in Reactor Plant SUBSAFE/Hull Integrity areas by the FMA and forward to the QAO for review.

f. (Submarines only) Maintain copies of approved RPWAR forwarded to the Reactor Plant Planning Yard in an auditable fashion.

g. Provide the tended ship the test requirements and joints/components to be tested for recertification of FMA work prior to commencing work on the tended ship.

h. Conduct oral examinations for qualification of personnel as reactor plant Cleanliness Inspector/Certifier.

i. Ensure only appropriately trained and/or qualified personnel perform nuclear work.

1.6.6 RMC/FMA Planning and Estimating Officer. Planning and Estimating Officer is responsible to:

a. Determine and specify the material requirements and the certification requirements for the LI/SS/SFCC and other materials to be used in non-nuclear controlled work.

b. Initiate procurement action for LI/SS/SFCC stock program material and other materials required for accomplishment of non-nuclear tasks assigned.

c. Review the FWP as required in Part I, Chapter 2, paragraph 2.3.4 of this volume.

d. Prepare and promulgate the CWP when OQE is required at the conclusion of the non-nuclear controlled work and as required by Part I, Chapter 2 of this volume.

(1) Verify the FWP is the correct procedure both in sequence and requirements to satisfactorily accomplish the controlled work.

(2) Verify the CWP contains/lists the correct technical specifications or requirements (e.g., torque values, dimensions, NDT inspections, special cleanliness, tests) for certification attributes to be documented on the appropriate QA form.

(3) Ensure test requirements comply with the latest applicable specifications.

(4) Ensure signatures for repair work attributes are annotated as requiring CSB or signature, as applicable, on the QA form and in the FWP as discussed in Part I, Chapter 2, paragraph 2.3 of this volume by use of (R), (S), (CI), (G), (C), (I), (Q) and (V) in the margin by the appropriate step.

e. Provide the tended ship the test requirements and joints/components to be tested for recertification of FMA work prior to commencing work on the tended ship.

1.6.7 RMC/FMA Division Officer. Division Officers are responsible to:

a. Supervise and direct QA program within work centers under their cognizance.

b. Ensure divisional personnel understand the requirements for/of a CWP.

c. Ensure all repair actions performed by their division conform to applicable specifications and any deviation from specifications is reported as a DFS for non-nuclear work or LAR for nuclear work.

d. Ensure CMPOs are assigned, qualified and executing their duties for each work center handling or stowing controlled material.

e. Ensure areas are designated and are appropriate for proper stowage of controlled material.

f. Review the FWP as required in Part I, Chapter 2, paragraph 2.3.4 of this volume.

g. Review each TWD as required in Part I, Chapter 2, Appendix D, of this volume.

h. Conduct/monitor divisional and work center QA training.

i. Obtain written permission from the QAO to downgrade LI/SS Stock Program Material or NRP for non-level use.

1.6.8 RMC/FMA Work Center Supervisor. Work Center Supervisors are responsible to:

a. Ensure controlled and non-controlled material to be installed is correct per plan, drawing or other specification.

b. Review each TWD for the work center as required in Part I, Chapter 2, Appendix D, of this volume.

c. Review the FWP as required in Part I, Chapter 2, paragraph 2.3.4 of this volume.

d. Supervise QA programs within assigned work centers.

e. Review work for satisfactory completion.

f. Ensure CWPs for completed controlled work are complete, properly reviewed and forwarded with all certifying documents, when work is completed.

g. Ensure work center personnel are properly trained and qualified, if required, prior to assignment to tasks requiring QA and/or special cleanliness (e.g., oxygen, hydrogen, reactor plant, steam plant) certifications.

h. Ensure all personnel use only TMDE (i.e., measuring devices, instruments, inspection tools, gauges, jigs or fixtures), which have current calibration stickers/records attached or available, for production, acceptance and testing. Uncalibrated/untested TMDE will be tagged and removed from service immediately.

i. Prepare DFS or LAR for non-conforming conditions found or caused by the work center, sign, and forward to QAO.

1.6.9 RMC/FMA Craftsman. Craftsman is responsible to:

a. Perform all maintenance actions in accordance with the FWP. If that guidance is either incorrect, incomplete or unclear, **stop** and seek clarification from the work center or shift supervisor.

b. Ensure QA forms associated with the maintenance are correctly completed as required by the applicable sections of this volume.

c. Enter signature, printed name and date on all QA data forms completed.

d. Ensure only TMDE (i.e., measuring devices, instruments, inspection tools, gauges, jigs or fixtures), which has current calibration stickers/records attached or available, is used for production, acceptance and testing. Uncalibrated/untested TMDE will be tagged and removed from service immediately.

1.6.10 RMC/FMA Quality Assurance Officer. QAO is responsible to:

a. Organize and implement a QA program within the RMC/FMA to carry out provisions of this volume.

b. Provide guidance and evaluate efforts to produce work of acceptable standards.

c. Prepare QA procedures, where necessary, to implement the provisions of this volume.

d. Assist the TYCOM/ISIC as requested in performing QA audits on tended ships.

e. Assist the TYCOM/ISIC as requested in providing indoctrination training on the QA program to the Engineer Officers and QAOs of assigned ships. Provide QA training for tended ship's personnel qualifying as CMPO/CMH, QAS and QAI.

f. Approve downgrading of controlled material.

g. Determine suitability for use of controlled material received from one ship, for use on another ship, when the transfer is via an RMC/FMA work center.

h. Provide disposition instructions for rejected material.

i. Institute a formal qualification program for QA personnel.

j. Train and qualify work center CMPOs/CMHs. Inform the appropriate Division Officer and the Production/Repair Officer in writing of those qualified and any changes.

k. Review RMC/FMA generated DFS for accuracy and technical merit, sign and forward to the Repair Officer. At an RMC, this function will be the responsibility of the NAVSEA Technical Authority Warrant Holder in Engineering Department.

l. Obtain chemical analysis, NDT and destructive testing required to upgrade or certify material for nuclear and non-nuclear applications for both the FMA and tended ships.

m. Establish and coordinate RMC/FMA procedures for material control as delineated in this volume.

n. Review, open and close out TWDs as required in Part I, Chapter 2, Appendix D, TWD Review and Approval matrix of this volume. Establish positive controls to ensure that repairs which are not in conformance with specification are not accepted without an approved DFS for non-nuclear systems or LAR for nuclear systems.

o. Review the FWP as required in Part I, Chapter 2, paragraph 2.3.4 of this volume.

p. (Submarines only) Review and sign RPWAR.

q. Develop a QA training program, in conjunction with the Training Officer, which includes training for personnel who perform, plan and/or supervise controlled work.

(1) Supervise training and qualification of:

(a) QAS.

(b) QAIs.

(c) CMPOs/CMHs.

(d) Cleanliness Inspectors/Certifiers.

(2) Review and evaluate training of all personnel performing controlled work. Ensure that the continuing training is in sufficient detail and depth to provide effective training in all topics and areas specified in Part I, Chapter 3 of this volume.

r. Maintain a current master list of qualified QASs (if assigned), QAIs, CMPOs/CMHs, Cleanliness Inspectors, Oxygen Clean Workers and Oxygen Clean Instructors as specified in Part I, Chapter 10 of this volume.

s. Establish and administer a comprehensive RMC/FMA QA audit and surveillance program capable of assessing the work performance, training and qualifications and identifying areas of poor performance. Enlist the assistance of other repair department officers and senior enlisted personnel for audits and surveillance in the repair and supply departments.

(1) Prepare and update a written surveillance and annual audit schedule.

(2) Provide the Commander/Commanding Officer with a semi-annual evaluation of the overall adequacy and effectiveness of the RMC's/FMA's QA program.

t. Ensure record files are maintained for CWP, controlled material, audits, surveillance, audit deficiency corrections, qualifications and training.

u. Ensure all testing required for completion of TWD is complete and reviewed prior to the tended ship reactor plant startup, propulsion plant startup, or getting underway or a DFS for non-nuclear systems or LAR for nuclear systems has been submitted and approved.

v. Perform opening reviews of CWP as assigned to assure OQE generated will support work recertification. Perform closing reviews of CWP as assigned to assure technical accuracy and satisfactory OQE exists for record history.

w. Supervise QASs, QAIs, Cleanliness Inspectors/Certifiers, CMPOs/CMHs and other personnel, involved in controlled work, in the performance of their QA duties.

x. Conduct QA audits, surveillance and coordinate corrective actions to ensure compliance with specifications.

y. Maintain QA records and files, which includes completed CWPs including radiography film (if radiography used for acceptance of work), controlled material records (e.g., QA form 1, certification papers received with the material), training and qualification, etc.

1.6.11 RMC/FMA Assistant Quality Assurance Officer. AQAO is responsible to perform duties as assigned by the QAO.

1.6.12 RMC/FMA Quality Assurance Supervisor. QAS is responsible to:

a. Ensure all testing required for completion of CWP is complete and reviewed prior to the tended ship reactor plant startup, propulsion plant startup, or getting underway or a DFS for non-nuclear systems or LAR for nuclear systems has been submitted and approved.

b. Perform opening reviews of CWP as assigned to assure OQE generated will support work recertification. Perform closing reviews of CWP as assigned to assure technical accuracy and satisfactory OQE exists for record history.

c. Train and supervise QAIs, Cleanliness Inspectors/Certifiers, CMPOs/CMHs and other personnel, involved in controlled work, in the performance of their QA duties.

d. Conduct QA audits, surveillance and coordinate corrective actions to ensure compliance with specifications.

e. Maintain QA records and files including completed CWPs (including radiography film if radiography used for acceptance of work), controlled material records (e.g., QA form 1, certification papers received with the material), training and qualification, etc.

f. Review DFS for accuracy and technical merit and forward to QAO.

1.6.13 RMC/FMA Quality Assurance Inspector. QAIs are responsible to:

a. Review steps in CWP which require QAI signatures to verify all requirements are adequately addressed.

b. Ensure all work inspected meets the requirements set forth in the latest applicable plans, specifications and directives of higher authority as stated in the CWP.

c. Perform QA inspections of certification attributes.

d. Verify permanent markings on controlled material are properly transferred and new material control tags are affixed.

e. Ensure all personnel use only TMDE (i.e., measuring devices, instruments, inspection tools, gauges, jigs or fixtures), which have current calibration stickers/records attached or available, for production, acceptance and testing. Uncalibrated/untested TMDE will be tagged and removed from service immediately.

f. Sign QA form 2 as controlled material is correctly installed for SUBSAFE and nuclear systems.

g. Witness and verify testing and inspections. Promptly inform supervisors of unsatisfactory test results.

h. Ensure all test results are completed, properly documented and the QA forms are returned to the CWP except for those specifically designated as work center records.

i. Review DFS for accuracy and technical merit and forward to QAO.

1.6.14 RMC/FMA Controlled Material Petty Officer/Controlled Material Handler. CMPO/CMHs are responsible to:

a. Receipt inspect all controlled material received by their work center/division.

b. Ensure all material under their cognizance is stored and controlled to the governing material control requirements.

c. Inspect controlled material storage areas of their work center semi-annually, as a minimum, in accordance with Part I, Chapter 6 of this volume.

d. Ensure controlled material is properly stowed and handled so the identification of the subject material and its certification are always maintained.

e. Reject unsatisfactory material. Fill out and attach QA form 3 and request disposition instructions.

f. Send any material certification documents for material which has been provided by a ship along with the QA form 1 to the QA office. Ship shall retain originals when the material has been issued for installation.

g. Receipt inspect package alteration kits that contain controlled material when ready for use.

h. Remove QA form 3 from previously rejected and now accepted controlled material, annotate the material acceptance on the QA form 2 and file the QA form 3 with the CWP.

i. Retain custody of controlled material when it is not in the custody of a craftsman or in a controlled material storage area.

j. Ensure controlled material markings are on all pieces when cutting a smaller piece from a large one.

k. Ensure controlled material markings are moved to an unaffected area, if the controlled material item will lose the markings due to a fabrication process (e.g., welding, machining) prior to the fabrication process.

1.6.15 RMC/FMA Cleanliness Inspector/Certifier. Cleanliness Inspectors/Certifiers are responsible to perform initial, in process and final cleanliness inspections during maintenance/repairs for those systems requiring cleanliness controls per Part I, Chapter 5, paragraph 5.8 of this volume.

1.6.16 RMC/FMA Command Nondestructive Test Examiner. The Command Nondestructive Test (NDT) Examiner shall be appointed in writing by the Commander/Commanding Officer and shall be responsible for all aspects of the Command's Nondestructive testing program. The Command NDT Examiner will perform the responsibilities of the NDT Examiner per paragraph 1.6.17 of this chapter when a single Examiner is assigned to the RMC/FMA. The following shall comprise the core responsibilities of the FMA Command NDT Examiner:

a. Coordinate the efforts of other assigned NDT Examiners at the activity.

b. Act as the Command's point of contact for NDT technical issues. In addition, act as the Command's point of contact with NAVSEA for NDT issues.

c. Develop the Command's NDT Examiner guidelines, to include the Command's Written Practice for NDT certification when required by reference (h) utilizing the input of all participating NDT examiners.

d. Ensure submittal of required reports of certification or re-certification to higher authority as required by reference (k).

e. Review all requests for NDT training courses and examiner certification services. Provide recommendations to the chain of command regarding eligibility of the requestor and the need for such training or certification based on current and projected NDT personnel resources.

1.6.17 RMC/FMA Nondestructive Test Examiner. RMC/FMA NDT Examiner is responsible to:

a. Approve examination material for all NDT methods utilized at the activity for which they are certified. Ensure examination material reflects changes made to applicable fabrication documents.

b. Approve and qualify NDT procedures for each method utilized at the activity. Revise and approve procedures as necessary when changes are made to applicable fabrication documents.

c. Schedule and perform NDT Inspector surveillance. Maintain records of surveillance in order to perform trend analysis of inspector abilities and program effectiveness.

d. Schedule and administer NDT examinations. Maintain records of examinations sufficient to trace inspector qualifications to original examination material. Maintain a matrix of high miss questions in order to assess inspector knowledge and program effectiveness.

e. Train, certify and monitor NDT Inspectors as required by applicable specifications and Part I, Chapter 3 paragraph 3.2.2 of this volume.

f. Schedule eye examinations for NDT Inspectors.

g. Ensure each NDT Inspector's service record is kept updated with qualification status.

h. Maintain individual records of qualification for NDT inspectors.

i. Monitor the welder/brazer qualification and training per reference (j).

j. Review all welder/brazer records for completeness semi-annually. This review may be performed by the welding engineers at Trident Refit Facilities (TRF).

k. Review completed NDT inspection reports for technical completeness and accuracy and sign, where indicated on the report on completion of work.

l. Review, approve and monitor the commands' welder/brazer training and qualification program as required by reference (j).

m. Prepare and execute the training and qualification program for each NDT method that leads to inspector certification in each method and maintains inspector competency in each method.

1.6.18 RMC/FMA Nondestructive Test Inspector. NDT Inspectors are responsible to:

a. Verify CWPs which include NDT inspections properly identify the inspection requirements and acceptance criteria.

b. Ensure NDT inspections are completed correctly and in accordance with the applicable requirement and inspection reports are technically complete and accurate.

c. Ensure use of only TMDE (i.e., measuring devices, instruments, inspection tools, gauges, jigs or fixtures), which have current calibration stickers/records attached or available, for production, acceptance and testing. Uncalibrated/untested TMDE will be tagged and removed from service immediately.

d. Sign QA form 2 as controlled material is correctly installed.

1.7 OTHER ACTIVITY RESPONSIBILITIES. Activities other than RMC/FMAs will conform to the requirements of this volume through a formal MOA, as defined in Volume II, Part I of this manual, with the ISIC while conducting maintenance on fleet activities. This includes work performed by naval shipyards, government agents, civilian contractors and other activities not specifically mentioned in other sections of this instruction.

a. Ship's Force is ultimately responsible for all work accomplished on board their ship.

b. Ship's Force is responsible for the development of TWDs for use in technical assist visits.

c. In some cases, technical assists may provide troubleshooting services or complete equipment changes. Technical representatives are expected to utilize approved QA procedures or observe the requirements of this manual. The contractor or representative shall be able to explain what controls he/she will place on a given job, including testing and documentation to be provided for OQE.

d. Technical support agencies and contracted organizations may not perform work inside the SUBSAFE boundary. Only activities that are listed in NAVSEA NOTE 5000 are authorized to perform SUBSAFE work. In cases where RMCs or other activities are assisting on maintenance inside the SUBSAFE boundary, paragraph 1.7.a and 1.7.b of this chapter will be strictly adhered to.

e. Product Quality Deficiency Reporting shall be in accordance with reference (i), with the exception of Aircraft Launch and Recovery Equipment. Quality Deficiency Reporting associated with Aircraft Launch and Recovery Equipment is addressed in reference (k).

(This Page Intentionally Left Blank)

VOLUME V

PART I

CHAPTER 2

QUALITY MAINTENANCE PROCESSES

REFERENCES.

(a) OPNAVINST C9210.2 - Engineering Department Manual for Naval Nuclear Propulsion Plants
(b) NAVSEA 389-0153 - Radiological Controls
(c) NAVSEA S9213-33-MMA-000 - Radiological Controls for Ships
(d) NAVAIR AD-700A1-MDB-000 - Recovery Assistance Traversing (RAST) System
(e) NAVSEA T9044-AD-MAN-010 - Requirements Manual for Submarine Fly-By-Wire Ship Control Systems
(f) NAVSEA S0300-B2-MAN-010 - Supervisor of Shipbuilding, Conversion and Repair Operations Manual
(g) NAVSEA 0387-LP-046-8000 - System Hydrostatic Test Requirements
(h) NAVSEA 0924-LP-062-0010 - Submarine Safety (SUBSAFE) Requirements Manual
(i) NAVSEA S9074-AR-GIB-010/278 - Requirements for Fabrication Welding and Inspection, and Casting Inspection and Repair for Machinery, Piping and Pressure Vessels
(j) NAVSEA 0900-LP-001-7000 - Fabrication and Inspection of Brazed Piping Systems
(k) NAVSEA S9086-CH-STM-010 - NSTM Chapter 074 V1 (Welding and Allied Processes)
(l) NAVSEA S9AA0-AB-GOS-010 - General Specifications for Overhaul of Surface Ships (GSO) 1983 Edition
(m) NAVSEA T9074-AD-GIB-010/1688 - Requirements for Fabrication, Welding and Inspection of Submarine Structure
(n) NAVSEA S9086-T4-STM-010 - NSTM Chapter 589 (Cranes)
(o) NAVSEA SS800-AG-MAN-010/P-9290 - System Certification Procedures and Criteria Manual for Deep Submergence Systems
(p) NAVSEA SS521-AA-MAN-010 - U.S. Navy Diving and Manned Hyperbaric Systems Safety Certification Manual

LISTING OF APPENDICES.

A Technical Work Document Illustration
B Work Package Decision Process
C Formal Work Package Approval/Revision Sheet
D Technical Work Document Review and Approval Matrix

2.1 PURPOSE. To provide the requirements for generating work procedures that will provide the craftsman with clear, concise, and technically correct instructions to complete the maintenance task while conforming to technical specifications. The work instructions will vary in complexity depending on the type of work to be performed, the amount of existing guidance available, the extent of preparation and system restoration required, and the technical ability of the craftsman.

2.2 TECHNICAL WORK DOCUMENTS. Technical Work Documents (TWD) consist of three general types: Maintenance Procedures (MP), Formal Work Packages (FWP) and Controlled Work Packages (CWP). Refer to Appendices A and B to determine which type of TWD is required.

2.2.1 Minimum Requirements for using Technical Work Documents.

a. Nuclear Propulsion plant maintenance as defined in reference (a).

b. Repair or troubleshooting to Fleet Maintenance Activity (FMA) Nuclear Support Facility systems or components.

c. Radioactive repair work as discussed in references (b) and (c). Major work accomplished in reactor compartments or high radiation areas as required by references (b) and (c).

d. Manufacture and corrective maintenance of electrical/electronic nuclear support and test equipment (e.g., switchgear test equipment, scram breaker time response equipment).

e. Propeller/propulsor replacement or repair.

f. Any Freon systems including self-contained units when the gas path is penetrated.

g. FMA work on tended ship's systems.

h. Level I/Submarine Safety (SUBSAFE) system work.

i. Tests for FMA non-nuclear controlled work, which requires hydrostatic testing for recertification.

j. All flammable liquid shipboard systems.

k. Electric motor rewind.

l. (Submarines only) Repair of Masts and Antennas.

m. Other Ship's Force repair or troubleshooting as determined by the Department Head.

n. Troubleshoot and repair of Gas Turbines when:

(1) Repairs affect the gas path.

(2) Removal, repair and/or replacement of accessory gearbox and components.

(3) Repairs to bleed air piping.

o. Troubleshoot and repair of Main Propulsion Turbines/Generator Turbines.

p. Troubleshoot and repair of Propulsion and Generator Lube Oil systems.

q. Troubleshoot and repair of Propulsion and Generator Reduction Gearing/Drive Train Assemblies.

r. Troubleshoot and repair of Auxiliary Turbines and pumps in which disassembly is required.

s. Troubleshoot and repair of Boilers, Diesel Engines and their support systems.

t. Any work within the Scope of Certification boundary.

u. Troubleshoot and repair to submarine towed array handling systems.

v. Welding and brazing requiring a CWP per paragraph 2.2.4 of this chapter.

w. Maintenance on Weight Handling Equipment.

x. Maintenance on Recovery Assist, Securing and Traversing systems, per reference (d).

y. Maintenance performed which invokes MIL-STD 1330 or MIL-STD 1622 cleanliness standards.

z. Maintenance on Fly-By-Wire Ship Control Systems, per reference (e).

aa. (Submarines only) Special Valves.

NOTE: THE HEX PLUGS (MS PLUGS) DISCUSSED IN THESE PARAGRAPHS ARE NOT EQUIVALENT TO THE MS PLUGS DESCRIBED IN TABLE 5-14, RE-ENTRY CONTROL EXCEPTIONS OF CHAPTER I-5 OF THIS VOLUME. THE FOLLOWING PARAGRAPHS REFER TO TABLE 2-1 BELOW.

Table 2-1 Types of PTS/TPS Fittings

Style	Description	Ship/Class	Drawing/Specification
Style 1	Rectangular block assembly	SSN 688 Class	NGNN 2300-818
Style 2	Integral assembly or TRIDENT style fitting	SSBN 726 Class SSN 774 Class	NAVSEA 845-4687601
Style 3	Threaded boss assembly or Shroeder test fitting	SSN 21 Class SSN 774 Class	MIL-V-24695
Pressure Test Stations (PTS) and Test Pressure Stations (TPS) in the SUBSAFE boundary refer to components of different design that perform a similar function.			

(1) Style 1 and 2 PTSs and TPSs hex plugs form part of the secondary pressure boundary and serve as contaminant protection. Removal and reinstallation of the hex plug requires a TWD but does not require Re-Entry Controls or controlled assembly. The TWD shall verify that seat leakage criteria and seating surface and hex plug inspections are performed in accordance with applicable technical specifications.

(2) Re-Entry Controls are not required when operating Style 1 or 2 PTSs or TPSs associated needle valves in accordance with normal operating procedures identified in Ship Safety Manuals, Steam and Electric Plant Manuals or other NAVSEA-approved procedures. If a ship's operating procedure is unavailable, a locally prepared FWP will be generated to operate the valve.

(3) Style 3 PTSs and TPSs have a Delrin cap. Removal and reinstallation of the Delrin cap requires a TWD but does not require Re-Entry Controls or controlled assembly. The TWD shall verify that seat leakage criteria and seating surface and Delrin cap inspections are performed in accordance with applicable technical specifications.

(4) Any disassembly for major or minor repair of Style 1, 2 or 3 PTSs or TPSs requires a SUBSAFE Re-Entry Control CWP.

2.2.2 Maintenance Procedure. MPs may be fully usable in their existing form. The minimum requirements to perform any work are a valid MP and permission to perform maintenance. The following are examples of existing MPs:

a. Planned Maintenance System (PMS) Maintenance Requirement Cards.

b. Maintenance Standards (MS).

c. Ship Systems Manuals.

d. Component Technical Manuals.

e. Shipyard Process Instructions.

f. Ship Alteration Instructions.

g. Reactor Plant Manual Operating Procedures, Operating Instructions, Maintenance and Replacement Instructions, and Reactor Maintenance Requirement Page.

h. Alteration and Improvement Instructions.

i. Naval Sea Systems Command (NAVSEA) Drawings which include disassembly/reassembly instructions.

j. Shipyard Task Group Instructions (TGI).

k. Steam and Electric Plant Manual.

l. (Surface Force ships only) Reference (f) Appendix 4E specifications.

2.2.3 Formal Work Package. An FWP coordinates in a single document materials required, initial conditions, MP, test and inspections, and system restoration for the selected maintenance task. In some instances, the maintenance task will not have an existing MP. This will require the activity to develop an FWP in order to ensure first time quality accomplishment of the maintenance task. FWPs should be only as detailed as required by the complexity of the work, craftsman knowledge, technical requirements, extent of tests, and level of worker supervision required (see Appendix B).

2.2.4 Controlled Work Package. A CWP is required when higher authority requires a record (Objective Quality Evidence (OQE)) of repairs/maintenance for fabrication, repair, installation, inspection and testing process for specific systems/components, such as Level I, SUBSAFE, Submarine Flight Critical Components (SFCC) or nuclear. CWPs may be necessary when required by the level of work control of the system (nuclear, SUBSAFE, SFCC and Level I) or when other extensive and formal Quality Assurance (QA) or test requirements exist (weight test, crane repairs, etc.). In its simplest form a CWP will consist of, as a minimum, a MP and the required QA forms. Examples of required CWPs:

a. Level I.

(1) Manufacture, installation, and repair of Level I components/systems except for the following actions, which may be controlled with TWDs other than CWPs.

(a) Software replacement (e.g., O-rings, packing glands, body to bonnet gaskets, silver seal replacements).

(b) Inspections to support routine maintenance programs or troubleshooting.

(c) Replacement of any non-pressure boundary parts which are non-Material Identification and Control (MIC) level pieces.

(2) Repair by welding, brazing, machining, lapping or manufacture of Level I fittings or components.

b. Reactor Plant/Nuclear Support Facility/Controlled Industrial Facility.

(1) Manufacture, installation, and repair of nuclear Level I systems and components. The following actions may be controlled with TWDs other than CWPs except for work involving Nuclear Level I piping system mechanical joints:

(a) Software replacement (e.g., O-rings, packing, body to bonnet gaskets, silver seal replacements).

(b) Inspections to support routine maintenance programs or troubleshooting.

(c) Replacement of any non-pressure boundary parts which are non-Material Identification and Control (MIC) level pieces.

(2) Hydrostatic testing as required by reference (g) to certify reactor plant work conducted.

(3) Welding and Nondestructive Testing (NDT) which provides OQE of the integrity of reactor plant piping, and structural welding.

(4) Work affecting the integrity of permanent shielding installations.

(5) Work affecting reactor plant brazed joints that are inaccessible during reactor operations.

(6) Manufacture and corrective maintenance of mechanical nuclear support and test equipment whose configuration is specified by NAVSEA technical manuals or drawings (e.g., brittle fracture pressure limit rigs, nitrogen sparging rigs).

(7) Ship's Force retests of FMA or Ship's Force performed nuclear work that require hydrostatic testing or an external pressure source for the retest or test (e.g., Pre-Overhaul Tests).

c. Work within SUBSAFE/hull integrity boundary.

(1) Work within SUBSAFE/hull integrity boundary, identified in reference (h), including submarine pressure hull grinding, cutting and welding.

(2) Any disassembly for major or minor repair of PTSs or TPSs in the SUBSAFE boundary.

d. Welding/Brazing.

(1) P-1, P-LT, P-3a Special Category/Critical Piping Systems repair, alteration and/or fabrication, by welding and brazing in accordance with reference (i) and reference (j). (Small self-contained freon units, such as ice cream machines, ice machines, etc., are excluded.)

(2) Pressure Vessel Class A-F, A-1, A-2, A-3, A-LT, M-1, T-1 repair, alteration and/or fabrication by welding and brazing in accordance with reference (i).

(3) Permanent repairs and alterations of the primary structure of surface ships, including ballistic plating and superstructure designed for blast loading. Records shall be made and retained for category "C" repairs as required by references (k) and (l).

(4) Welding on submarine hull and structures in accordance with reference (m) as listed below:

(a) Pressure hull envelope.

(b) Pressure hull structure.

(c) Support structure.

(d) Containment structure.

(e) Extended pressure hull structure.

(f) Interface structure.

e. Weight Handling Equipment Manufacture and Repair except for cranes.

f. Corrective maintenance within the certified boundaries (envelope) of cranes as defined in reference (n).

g. (Submarines only) Performance of Category "A" (Safety of Ship) Alterations and Improvements.

h. Maintenance within SUBSAFE boundaries of submarine antennas and masts.

i. Maintenance on Recovery Assist, Securing and Traversing systems per reference (d).

j. Maintenance on systems requiring cleanliness controls as defined by MIL-STD 1330 or MIL-STD 1622 (e.g., diver's air, oxygen, nitrogen, hydrogen, helium-oxygen). For MIL-STD 1622 applications, only systems defined as "critical" require a CWP for cleanliness controls. A CWP is not required for inspections specified in MIL-STD 1330 during maintenance of cleanliness when performed by Type Commander or Ship's Force personnel on systems and equipment not certified by reference (h), reference (o) or reference (p).

k. Maintenance within the SFCC Boundary, per reference (e).

2.2.5 Maintenance Certification Record/Controlled Work Package (Non-SUBSAFE). Various sea water system components require frequent entry into the system boundary for routine operations or maintenance actions in order to enable the ship to carry out its mission. Table 2-2 of this paragraph includes certain systems and equipment which require Level I work controls that are frequently entered but shall be exempt from Maintenance Certification Record (MCR)/CWP Controls. The operational requirements for these systems and equipment have been reviewed. Inherent operational controls in the present system are considered adequate and the below listed items are considered safe exceptions to the formalized MCR/CWP system. The operational control which is considered as meeting the intent of the MCR/CWP requirements is listed beside each item and must be in effect in order to use the exception.

NOTE: MCR EXCEPTIONS ARE FOR SHIP'S FORCE USE ONLY AND ARE NOT AUTHORIZED FOR USE BY REPAIR ACTIVITIES. REPAIR ACTIVITIES SHALL NOT REQUEST THE SHIP TO INVOKE A MCR/CWP EXCEPTION IN CONJUNCTION WITH REPAIR ACTIVITY WORK.

NOTE: MCR EXCEPTIONS ARE NOT AUTHORIZED TO BE USED FOR THE INSTALLATION OF NEW LEVEL I HARDWARE WITHIN THE LEVEL I BOUNDARY.

Table 2-2 Submarine Seawater MCR EXCEPTION ITEM (Non-SUBSAFE)

Submarine Seawater MCR EXCEPTION ITEM	OPERATIONAL CONTROL REQUIREMENT	RECERTIFICATION TESTING
Cleaning shaft seal Auxiliary Sea Water strainer/filter	Controlled assembly (Notes 1 and 2)	None
Cleaning of Auxiliary Sea Water system strainers	Controlled assembly (Notes 1 and 2)	None
Cleaning evaporator and distilling plant supply seawater strainers	Controlled assembly (Notes 1 and 2)	None

Shaft Seal Cooling Water Cyclone Separators	Controlled assembly (Notes 1 and 2)	None

Notes:

(1) An FWP in accordance with Part I, Chapter 2 of this volume, (e.g., PMS MRC, technical manual pages, detailed maintenance outline), will be used to control and document all work performed as a MCR exception.

(2) Controlled assembly requirements are:

(a) Verification that surface finishes of gasket/o-ring sealing surfaces are in accordance with applicable specifications.

(b) Verification that fastener material and installation is in accordance with applicable specifications.

(c) Verification that gaskets/o-rings are properly installed and in accordance with applicable specifications.

(d) Assembly is documented on a QA form 34.

(e) Inspected by a Quality Assurance Inspector (QAI) or Quality Assurance Supervisor (QAS).

NOTE: EXCEPTIONS FROM MCRs OTHER THAN THOSE LISTED ABOVE ARE NOT AUTHORIZED.

2.2.6 Sequencing Document. A sequencing document is used to tie two or more TWDs together when a single TWD is insufficient to complete a maintenance task. In these cases, a sequencing document shall be developed, which provides the craftsman with directions for going from one TWD to another. Normally, this sequencing document will be in outline format. The sequencing document will be approved as directed by the Department Head (Principal Assistant for Aircraft Carriers).

2.3 FORMAL WORK PACKAGE DEVELOPMENT.

2.3.1 Responsibility for Preparation of Formal Work Packages/Controlled Work Packages.

a. For Ship's Force work processes, the FWP/CWP is prepared by the work center responsible for accomplishing the work.

b. For FMA work processes, the FWP/CWP is prepared by the appropriate planning division.

2.3.2 Security Classification. Attention must be paid to proper classification, handling, and marking of an FWP. As initially prepared, the FWP itself or as used in a CWP, is frequently unclassified and becomes classified as data is recorded. FWPs for nuclear propulsion plant systems are frequently CONFIDENTIAL, and almost always contain Naval Nuclear Propulsion Information and should be marked and controlled as required by the appropriate NAVSEA, Naval Operations (OPNAV), and Department of Energy Security instructions (e.g., NAVSEAINST 5510.45 Series, NAVSEAINST C5511.32, OPNAVINST 5510.11 Series, CG-RN-1).

2.3.3 Formal Work Package Format. The FWP format below identifies elements that may be beneficial when writing an FWP. Asterisk (*) elements are required for all FWPs. This format is a general guide and each element may not be required depending on the task being performed.

a. List of References.

b. List of Enclosures.

c. List of Effective Pages (LOEP).

d. General Information.

e. Material. *

f. Responsibilities.

g. Precautions.

h. Budgeted Man-Rem (if required by the Radiation Health Manual).

i. Initial Conditions (plant/system conditions, prerequisites including tagouts). *

j. Procedure. *

k. Test and Inspection. *

l. System Restoration. *

2.3.3.1 Formal Work Package Elements Defined.

a. List of References. All references used shall be listed in a manner which will allow positive identification of the references and will state the current revision and advance change notice when the FWP was prepared.

b. List of Enclosures. Enclosures are any technical documents which are not readily available to the craftsman and are used to provide information, direct or document work, or direct contingency work. Each enclosure page will contain, as a minimum, the FWP (file) number, enclosure number, and enclosure sheet number for traceability purposes. Enclosures are not required to be listed as references. Examples of enclosures are:

(1) Diagrams, prints or applicable portions of technical manuals.

(2) Necessary QA forms (CWP only).

(3) Contingency repair (predictable event).

c. LOEP. The LOEP is an accounting of every page, including enclosures that make up the FWP. Each time a change/revision adds, modifies, or deletes a page of the FWP, the LOEP sheet must also be revised. Original pages will be marked "-". Subsequent changes/revisions will reflect latest change/revision number.

d. General Information. This section is used to provide useful information, clarifying remarks, and sequencing allowances.

e. Materials Required (required element). This section is used to list all material, spare parts, and special tools required to accomplish the job. Material listed in this section should be verified on hand prior to starting work. A Job Material List may be attached as a supplement to the Material List. Lead Work Center (LWC) Supervisor/Division Officer may add materials after the FWP is open that does not constitute a revision per paragraph 2.3.7.3 of this chapter using a technical pen and ink change. Example of a line in the materials required list or table:

Item Name	Size/Class/Type	Qty	Matl	MIL-SPEC	Level	PC#/ REF	Step/End Use	NSN/ NIIN
Bolt	½ -13UNCx2½	6ea.	Cr-Mo	MIL-S-1222	Level I	12/E	H.3/ASW-504	

NOTE: THE RESPONSIBILITIES SECTION OF THE FWP IS MANDATORY IF MORE THAN ONE REPAIR ACTIVITY IS INVOLVED IN THE WORK.

f. Responsibilities. List the general responsibilities of all involved ship's divisions or FMA Work Centers and tended ship personnel. Examples are:

(1) "38N will establish and maintain freeze seals as specified in the Freeze Seal Agreement."

(2) "51A will provide motor rewind and balancing services."

g. Precautions. List precautions for personnel and equipment protection that are specific to the job. Three examples of precautions are:

(1) Personnel: Hazards (e.g., toxic or explosive mixtures), stressors (e.g., high noise levels, high heat operations), and protective requirements needed to ensure personnel safety.

(2) Equipment: Safeguards, protective equipment, operating restrictions necessary to prevent equipment damage.

(3) Prevention of the loss of cleanliness: Specific precautions to prevent the loss of cleanliness for the task being performed.

h. Budgeted Man-Rem. In this section, establish the Man-Rem estimate for accomplishment of the task, if required by the Radiation Health Protection Manual, NAVMED P-5055.

i. Initial Conditions (required element). This section contains those prerequisites and plant conditions that must be completed prior to commencing the MP. Examples are: material certification, job briefings and actions required for safety precautions listed in the Precautions Section.

(1) Prerequisites must be completed prior to starting the MP and include actions necessary to certify the material, conduct briefings and state safeguards taken against hazards identified in the Precautions Section. Production work, other than shop work will not be performed as a prerequisite. Examples of prerequisites:

(a) "EM01 or 38A: Record name plate data from component to be worked. Verify the FWP is consistent with the name plate data."

(b) "Division Officer/Leading Petty Officer (LPO)/Nuclear Repair Officer (NRO)/Radiological Control (RADCON) Officer: Conduct a pre-work briefing. Complete attendance sheet provided as Enclosure ( )."

(2) List the initial plant/system conditions required to properly and safely accomplish the work to be done. This should include work boundaries which will be specified by the Ship/FMA depending on the job. The isolation boundaries will be determined and established by the duty officer/tagout authorizing officer prior to authorizing commencement of the maintenance (this includes the isolation valve lineup, power isolation, etc.). The extent of this section will vary depending upon the type of job.

(a) For a Ship's Force job, this section should identify work boundaries and plant/system conditions (e.g., Pressure/Temperature Band, cold iron). The duty officer/tagout authorizing officer will determine and set the isolation boundaries.

(b) For an FMA ship to shop job, this element is not applicable.

(c) For an FMA job on a tended ship, the FMA must determine the work boundaries and identify to the ship any plant conditions that must be maintained during the work. The ship will determine and set the isolation boundaries.

j. Procedure (required element). This section contains the instructions on how to accomplish the work. Concentrate on putting the steps of the job in proper sequence. Don't describe technically how to do a step (unless past experience has shown some of this type of information is required). The following steps describe how to write this section of the FWP:

(1) Outline the various steps necessary to accomplish the work to be done. Whenever there is a need to provide information, or caution the reader, write the word (NOTE or CAUTION) in capital letters followed by a colon and the text of the note or caution in ALL CAPITAL LETTERS. The NOTE or CAUTION is to appear immediately before the step or section it is applicable to. NOTES and CAUTIONS do not perform work, but are used as the first sentence(s) in a work step. Where NOTES and CAUTIONS are used in the same work step, the CAUTION will be specified first.

(a) CAUTIONS should only be used whenever a specific danger to personnel, equipment, or the potential for loss of cleanliness exists.

1 CAUTION: THE ANTI-SEIZE COMPOUND USED IN THIS STEP IS A HAZARDOUS MATERIAL AND REQUIRES SPLASH PROOF GOGGLES AND RUBBER GLOVES TO BE WORN WHILE HANDLING OPEN CONTAINER OR USING THE MATERIAL.

2 CAUTION: ENSURE CLEANLINESS PLUGS ARE STAGED FOR USE PRIOR TO BONNET REMOVAL.

(b) NOTES should inform the reader about key information, sequence allowance or direct him/her to additional information.

1 NOTE: STEPS 8, 9, AND 10 MAY BE PERFORMED IN ANY SEQUENCE.

2 NOTE: STEPS 1 THROUGH 4 MAY BE PERFORMED SIMULTANEOUSLY.

(2) Work Center Designations. This is not mandatory for Ship's Force work. Each work step of the procedure shall have a Work Center (i.e., 31A, EM01, etc.) designated responsible for performing that step. A specific designation (e.g., NRO, Engineering Officer of the Watch, Engineering Duty Officer, LPO/LWC Supervisor, LPO) may be substituted for Work Center designations where appropriate. More than one Work Center Designation may be used where dual responsibilities are needed. Examples of Work Center Designations:

(a) "38A/93B: Perform a final disc-to-seat blue check. Verify that a satisfactory final seat-to-disc blue check has been performed."

(b) "38N: NOTE: SEE FIGURE [1] OF ENCLOSURE (3) FOR CANOPY JOINT INFORMATION AND LOCATION. Fit-up the upper and lower body-to-bonnet canopy joints."

(3) Symbols. The symbols below are located in the margin of the FWP and indicate the following:

(a)	(R)	=	Steps requiring verification/inspection as defined in references (b) and (c).
(b)	(S)	=	Steps in an FMA procedure requiring verification by a member of Ship's Force.
(c)	(C)	=	Steps requiring Cleanliness Inspection by craftsman.
(d)	(I)	=	Steps requiring inspection by a QAI or NDT Inspector.
(e)	(CI)	=	Steps requiring independent Cleanliness Inspectors (SCI, RCI).
(f)	(Q)	=	Critical Quality Control Points (Q-Point).
(g)	(V)	=	Steps requiring verification by a craftsman.
(h)	(G)	=	Government notification required.

(4) Signature Requirements in FWPs and CWPs. Certain steps require positive assurance that the step was actually performed and/or completed in a prescribed manner. Signatures are also required for assurance of critical requirements, critical measurements, or requirements for OQE. If the step requires completion of a data form (e.g., inspection, NDT record, hydrostatic test data sheet), the signature block shall be on the data form, not the procedure step. The following is a list of typical steps/examples requiring signatures:

(a) Steps which require performance of QA checks or NDT that are documented on a QA form in order to provide traceability of signatures. Personnel who sign QA forms or other OQE documents will print their name along with their signature and date. These types of steps must include a statement of satisfactory compliance adjacent to the signature block in the associated QA form.

(b) Completion of a strength test.

(c) Hull and backup valve blue checks of seat and disc and stack height measurements.

(d) Completion of Controlled Assembly steps.

(e) Certification Signature Block requirements of Part II, Chapter 1, Addendum B-1, Section 2.d. of this volume.

(5) In order to provide traceability of signatures, personnel who sign QA forms, or other OQE documents will print their name along with their normal signature. This will positively identify the individual and allow traceability of the signature to appropriate authorization and qualification records.

(6) For nuclear work, Certification Signature Blocks are required where specifically called out in NAVSEA technical documents (see Part II, Chapter 1 of this volume).

NOTE: WHEN INVOKING A MS WHEN OTHER THAN A COMPLETE COMPONENT OVERHAUL IS PLANNED, THE MS MAY BE USED AS A GUIDE. THERE IS NO NEED TO INVOKE THE ENTIRE MS FOR SPECIFIC REPAIRS: E.G., PUMP MECHANICAL SEAL REPLACEMENT NEED NOT INVOLVE COMPLETE BREAKDOWN AND INSPECTION OF THE PUMP.

(7) Procedure Detail. The procedure should be used to list the various tasks to be performed and the sequence in which they should be accomplished. Notes on proven craftsmanship skill techniques that significantly aid in first-time quality and are not addressed in other reference documents should be included. A well-written procedure is designed for use by trained personnel who have a requisite level of knowledge about their specialty and the work to be performed. A procedure must have sufficient detail to allow a determination of exactly what was done, material used, inspections required, and allow re-certification of the system or component.

(8) Sequencing of Work. As the work package is being prepared, the steps of the job should be placed in a logical and proper sequence. In instances where work can be performed in parallel, identify those steps by use of a sequencing note.

(9) Q-Points. Work processes, regardless of type (maintenance, training, administrative, etc.), have critical execution points whose proper accomplishment overwhelmingly affects the ultimate first-time quality success of the process. Quality Maintenance Program work processes identify these crucial work process points as Q-Points. The below concepts apply to Q-Points:

(a) Q-Points in a work process are typically characterized by requiring high level skills, proficiency, strong knowledge, working within narrow tolerances, and/or difficult environmental conditions which mandate close supervision.

(b) Q-Points are determined by the organizational unit (Work Center, division, command, etc.) having cognizance over the specific work process.

(c) Maintenance managers shall give strong focus to Q-Points in work scheduling, personnel assignments, and appropriate supervision.

(d) Scheduling a Q-Point to occur late at night, with tired, fatigued personnel or with less than adequate supervision places the successful execution of that Q-Point at a great risk and compromises first-time quality completion of the work process.

(e) Q-Points are annotated in FWPs whether the FWP is used as a stand alone or as the core of CWP. Not all FWPs will require the use of Q-Points. Q-Points are process control aids and do not require signatures.

k. Tests and Inspections (required element). Only tests that are required to recertify the system or component after the repair work is complete will be listed in the test and inspection section of the FWP. Repair process tests, such as seat leakage tests or joint tightness tests performed in the shop, will be considered part of in process work and will be contained within the procedure section. If the testing results are required for OQE, then the necessary QA forms will be enclosures to the FWP.

(1) Ship to shop work. For FMA work on tended units where components are removed from the ship and repaired in the shop:

(a) All testing that can be performed in the shop will be performed in the shop by the FMA. The FMA will write and conduct all shop tests and inspections.

(b) The FMA will provide the tended unit with all required testing and inspection requirements and QA forms for the shipboard testing needed to certify the work performed by the FMA. The FMA work package will specify the joints/components that require testing and the type of test(s) required that the tended unit must perform. The tended unit will review the test requirements and is responsible for writing the test FWP and conducting the test(s). The original completed test documents will be provided to the FMA for inclusion in their work package (FWP/CWP) for re-certification.

(2) Careful planning and review prior to beginning work is needed to ensure all tests and inspections are identified before starting work. Various TWDs include tests and inspections required. Further guidance is also provided in Volume IV, Chapter 9 (System Test Check List) and Volume IV, Chapter 18 (Submarine Salvage Inspection) of this manual, and should be consulted when preparing and performing this section for the FWP.

(3) The range, serial numbers and calibration due date of any calibrated measuring and test equipment used for conducting the test must be documented on the QA form.

l. System Restoration (required element). This section contains those steps necessary to restore the system to normal operating status.

m. (Submarines only) Ship's Force test FWPs for non-shipyard associated FMAs nuclear work will be provided to the Immediate Superior In Command (ISIC) for review.

2.3.3.2 Use and Transcribing of Source Documents. Retyping/scanning extensive step-by-step procedures from source documents into FWPs is discouraged. Ideally, the procedure should reference the source document. A reproduced copy of the appropriate section may be included in the work package as an Enclosure. If the source document steps are not lengthy, they may be written directly into the procedure. When work is per a referenced procedure or enclosure, specify the precise steps of the reference or enclosure that are to be performed. The applicable portion of an enclosure to be used by the craftsman shall be marked or highlighted and portions not used will be marked out.

2.3.4 Formal Work Package Approval.

a. FWPs developed for a job are routed and approved prior to the performance of the work. The appropriate work authorization and reference material, (including QA documents for CWPs), to conduct the FWP shall accompany this routing.

b. Review of the FWP by the Chemical RADCON Assistant or Quality Assurance Officer (QAO) may be appropriate.

c. For FMAs, the FWP is reviewed by the Planning Officer, LWC and Assist Work Centers. The FWP can be approved by the Repair Officer as the standard FWP for that work process.

d. Approval signatures are made on the FWP approval sheet (see Appendix C). Signature blocks not required will be marked NA. Signature blocks that are signed will be accompanied by a legible printed name and date.

e. For Ship's Force standardized FWPs the LPO/LWC supervisor shall verify that all references are current. For FMA Standardized FWPs the Planning Officer shall perform the verification. If changes are required, the FWP must be revised and routed for approval.

f. For FWPs that are part of a CWP, see CWP approval matrix, Appendix D.

2.3.5 Controlled Work Package Approval. When the FWP has been prepared, the following actions are required to prepare and approve the CWP:

a. For controlled (i.e., Level I, Nuclear, Scope of Certification, SFCC) or SUBSAFE work to be performed by Ship's Force only, the ship's QAO will issue the CWP/Re-Entry Control (REC) numbers sequentially for entry in Block 4 of the ship's QA form 9. For controlled or SUBSAFE work performed by the repair activity on, or for a tended ship, the ship's QAO will issue CWP/REC numbers sequentially to the repair activity for entry in Block 4 of the repair activity's QA form 9. For controlled or SUBSAFE work to be performed by the repair activity only (in repair activity shops and the repair activity does no work onboard the ship, examples include ship to shop work; rotatable pool assets), the repair activity's QAO will issue the CWP/REC numbers sequentially for entry in Block 4 of the repair activity's QA form 9. The format of the CWP/REC serial numbers will be the serial number followed by the year (e.g., 1-90, 123-01).

b. An MCR/REC (QA form 9), will be prepared by the planner or CWP preparer. A QA form 10 may be required as a supplement to the QA form 9.

c. CWP approval is in accordance with Appendix D.

2.3.6 Formal Work Package In Process Use. The FWP/TWD will be at the job site during the performance of work. For multiple work sites, the FWP may be copied but all signatures and data will be recorded on the original/master FWP.

2.3.7 Formal Work Package Changes.

2.3.7.1 Pen and Ink Changes. Pen and ink changes to an FWP may be made for minor administrative changes that do not change the scope and/or intent of the FWP. Changes of this nature include additions or deletions of a Work Center assigned to a step, typographical/editorial errors, amplifying additional information to clarify a step, or a change in the sequence of steps.

a. Pen and ink changes to an FWP will be made with the approval of the LPO/LWC Supervisor or Division Officer responsible for the affected step in the FWP.

b. Pen and ink changes to the QA forms in a CWP shall be made with the approval of QAO, QAS or QAI. Examples are: Additions or deletions of Work Centers assigned on a QA form, correction of typographical or editorial errors on a QA form, addition of information to clarify a QA form.

c. Pen and ink changes shall be accomplished by drawing a single line through the portion to be changed, and entering the necessary change adjacent to that portion. The person making the change will initial, date, and print the name of the approving authority for the change. If the change is per verbal direction, the name or title of the person authorizing the change will be annotated (per telcon with Division Officer, Repair Officer, etc.).

d. Technical pen and ink changes are used to correct a technical error and must be approved by the department head. The same process will be used as in a non-technical pen and ink change except that it is documented in the "instructions for entering revision" area of the FWP revision sheet.

2.3.7.2 Rework Addendum. Rework is the unplanned repetition of a step, or a series of steps in a CWP/FWP. A rework addendum specifies which steps must be repeated in a CWP/FWP and may be used in lieu of a revision when rework is required and the scope of the original work will not be changed. Any additional actions that were

not included in the originally approved CWP/FWP constitute a change in scope or work boundaries and must be issued as a revision to the CWP/FWP. All rework must be documented.

a. The craftsman doing the work must stop the work and notify the LPO/Work Center Supervisor (WCS) that rework is required.

b. Clear directions on which steps are to be repeated must be provided. Reproducing QA forms may be required. All original and rework QA forms will be retained with the CWP.

c. An updated LOEP is required when rework requires additional QA forms.

d. A rework addendum is approved by the Division Officer (for CWPs, concurrence is obtained from the Production Officer/QA Officer).

2.3.7.3 Revisions. Revisions are any change to a CWP/FWP/TWD that meets the criteria listed below. Revisions require formal review and approval.

a. Reasons requiring a revision to a FWP/TWD:

(1) Scope of the work changes (e.g., replace software changed to machine the valve).

(2) Boundary of the work changes (e.g., change location of or additional disconnected joints).

(3) Change in test requirements unless authorized by a Departure from Specification.

(4) Any change in material requirements, which result in a change in testing requirements.

(a) The LWC Division Officer or LWC Planner may add materials after the FWP is open that do not change testing requirements.

(b) For FWPs executed as a part of the CWP, the QAO/QAS will concur with the addition of material. Concurrence will be by initialing the new line item.

(c) At job completion the material list must accurately reflect new materials installed in the system or component.

(5) If RADCON is insufficient for the work, based on actual conditions at the worksite, and to change the type of contamination enclosure specified for the work (e.g., to use a drape in lieu of glove bag as specified in the FWP).

(6) MCR/REC must be revised.

b. Steps for making a revision to a CWP/FWP/TWD:

(1) Work must stop immediately and the LPO/WCS must be notified when the need for a revision is identified.

(2) The revision is then initiated.

(a) For an FWP, the revision is initiated by the originating Work Center and reviewed by the Division Officer responsible for the work associated with the revision.

(b) For a CWP, the revision is initiated by the LWC and approved per the requirements of Appendix D of this chapter.

(3) A revision is normally made by page substitution. Revisions shall be lettered consecutively starting with "A" with the revision letter entered on all affected sheets of the FWP. Revised portions of the FWP shall be marked with a vertical line and the revision letter in the margin. New or replacement sheets may be added by labeling the added sheet with the number of the preceding page and a sub-letter (e.g., Page 5A of 15). Superseded pages (without signatures or recorded data) shall be retained until the FWP is closed out.

(4) A cover sheet for the revision is attached. The FWP revision sheets will be placed on top of the previous cover sheet with the most current cover sheet on top.

(5) Routing and authorization of the FWP/TWD is performed.

(a) The revised FWP/TWD must be routed only to and reviewed by the divisions affected by the revision process.

(b) For an FWP concurrence with the revision is obtained from the Department Head prior to executing the revision. A revision, as a minimum, must be approved by the same level of personnel who approved the original FWP.

(c) CWP revisions must be approved by the QAO and officer(s) who approved the original (e.g., Repair Officer, Department Head and Commanding Officer).

c. Other guidance on making revisions to an FWP/TWD.

(1) Revisions to issued FWPs may include non-technical modifications (e.g., line outs) discussed above. In addition, the following instructions are those permitted to be made in the Instructions for Entering Revisions area of Appendix C.

(a) Remove: Physically take out the page(s) as specified in the change instruction.

(b) Replace: Physically take out the page(s) specified in the change instruction. Put the replacement page(s) provided by the revision in place of the removed page(s) as specified.

(c) Insert: Physically insert the page(s) specified in the change instruction into the FWP as specified.

(2) A revision will not remove pages with or QA forms from the CWP/FWP/TWD with signatures or recorded data. The portion not yet complete on pages with signatures or data, including QA forms, will be lined out.

(3) Each activity affected will ensure that revisions are made and accounted for in an exact manner. The following intent will be adhered to regarding the revision process:

(a) All revisions will be entered into the body of the original FWP or will be added as an enclosure or attachment to the original FWP.

(b) Revisions shall be numbered such that accountability is maintained.

(c) The LOEP will be modified each time a change is made.

2.3.7.4 Attachment. If additional work must be added to the FWP and it is relatively extensive but does not require a change in plant conditions or work boundary, it can be accomplished by using an attachment to the FWP. In this case, the attachment would be written and added to the FWP after the enclosures using the revision process (at a minimum, as a technical pen and ink change). This page would have an additional step that directs performance of

the attachment. It would also indicate work sequence, for example whether the attachment would be worked in series or parallel with original FWP work. The composition of an attachment is identical to an addendum except it is prepared after the FWP is issued based on an unexpected problem.

Example: Upon disassembly of a valve it is determined the back seat of the bonnet must be repaired. This repair could be accomplished by attachment.

2.3.7.5 Supplement. Where additional work is required that is similar to or greater in scope to that on the original FWP or involves changes in plant conditions, testing, or major support equipment changes, a supplement could be used. A supplement is another stand-alone FWP containing detailed instructions to perform the additional work. A supplement will comply with the requirements of paragraph 2.2.3 of this chapter. The original FWP should indicate the additional work accomplished in the supplement, if required, to make the original FWP continue to stand alone.

Example: Recovery from loss of cleanliness where work boundaries are increased, additional components opened to obtain flush paths, etc. The original FWP would direct work to the supplemental FWP for recovery and then direct resumption of work per the original FWP. Once cleanliness is reestablished, the original work would continue. In this case, it is necessary to indicate satisfactory completion of the supplement, so that it is clear the condition is corrected.

2.3.7.6 Voiding. There are times during the performance of an FWP where events occur that render the rest of the FWP unnecessary. In this case, a revision would be issued to the FWP providing instructions such as directing work to a new FWP and would void the remainder of the original FWP. For a CWP traceability will be provided to the replacement REC. The document being voided must maintain traceability to the new activity's repair procedure when RECs are being transferred to another activity. Voided CWPs must retain traceability/continuity to the follow-on procedure.

Example: During the repair of a valve, defects are discovered that cannot be repaired, requiring the valve to be replaced instead of repaired as originally intended. Once it is determined the repair is no longer necessary, the repair instructions would be voided.

2.3.7.7 Formal Work Package Closeout. FWPs are reviewed and approved for closing by the LPO/LWC supervisor and designated assist LPO/WCSs for satisfactory completion. Signatures will be accompanied by a legibly printed name and date. The closeout review verifies the below attributes:

a. Maintenance was completed as specified in the FWP.

b. Required signatures were made and names printed.

c. Cleanliness requirements were satisfactorily met.

d. Correct materials were used.

e. Post-maintenance testing was properly completed.

f. Equipment and systems were restored to normal conditions and configurations.

g. Data was recorded properly and within specifications.

2.3.7.7.1 Completed Formal Work Packages. FWPs executed as stand-alone documents are not required to be retained following:

a. Completion of the availability in which the work was performed.

b. Completion of closeout reviews as required by paragraph 2.3.7.7 of this chapter.

c. Recording of all required data (e.g., Material History).

2.3.7.8 Controlled Work Package Closeout. Upon completion of the maintenance task, each of the cognizant work centers and the QAO will perform a comprehensive review of CWP documentation for correctness and completeness. Once a satisfactory review is completed, CWPs will be closed out subject to the following guidance:

a. CWPs required to support reactor plant or propulsion plant startup, equipment startup or ship's underway must be closed prior to the event.

b. CWPs for spare equipment, equipment requiring reactor plant or propulsion plant operations to test, equipment requiring retest at sea or for equipment not required for reactor plant, propulsion plant or at sea operations may be left open with the Department Head and Commanding Officer's concurrence.

c. All nuclear CWPs shall be reviewed for compliance with requirements and closed out prior to reactor plant or propulsion plant startup or ship's underway, as applicable. Prior to reactor plant or propulsion plant startup or ship's underway, any activities performing controlled maintenance on the ship will provide the status of the maintenance to the ship (and the ISIC for submarines). When critical operations or at sea testing is required to complete the task the following procedures will be used:

(1) The testing must be required by an approved NAVSEA procedure (e.g., Maintenance and Replacement Instruction).

(2) All open CWPs will be logged and tracked in the CWP/REC Log as follows:

(a) All deferred (follow-on) actions will be annotated in the CWP/REC Log of the tended ship.

(b) The CWP must include documented transfer of responsibility for accomplishment of deferred actions from the FMA to the tended ship and must be signed by the Commanding Officer, Reactor Officer or Engineer Officer of the tended ship.

(c) The closeout review of the CWP will verify that the required documentation from above is contained in the CWP for all deferred actions.

(3) A copy of the test results will be provided to the FMA (as applicable) for final review and CWP closeout as soon as practical.

d. In the event a CWP is prepared, the job is planned to be accomplished, but for some reason the job is cancelled or deferred the following actions should be taken:

(1) If work was authorized to start, the CWP must be revised to reflect that no work was accomplished and then administratively closed. The QA form 11 log will be annotated to show that the job was "Cancelled".

(2) If work was not authorized to start, and the job was cancelled, annotate the remaining blocks of the QA form 9 with "N/A" and note that the CWP was cancelled and no work was accomplished. Blocks 20 (and 21 if the CWP has an REC) will be signed to formally cancel the CWP. If the CWP was prepared by a Repair Facility, a copy of the QA form 9 will be provided to the Tended unit. If a Certification Continuity Letter is required, the cancelled CWP shall be provided with the Certification Continuity Letter. The QA form 11 log will be annotated to show that the job was "Cancelled".

(3) If work was not authorized to start and the job is deferred to a future maintenance period, the CWP is not required to be cancelled. The QA form 11 log will be annotated as "Deferred". This is not considered to be an open CWP/REC.

e. There are no retention requirements for a CWP if work was not authorized to start and the job was cancelled.

f. The closed CWP will be retained by the QAO in accordance with Part I, Chapter 10 of this volume.

2.3.7.9 Emergent Controlled Work. On those occasions when a component fails and the normal practice of processing a CWP would preclude meeting the ship's operational commitment, work may begin without formal approval of the CWP, provided the concurrence of the FMA Repair Officer (if an FMA is involved), and the ship's Commanding Officer and ISIC (if an FMA is involved) is obtained. The following is required:

a. The MCR/REC must be properly approved and, to the maximum extent possible, a CWP will be prepared prior to commencement of work.

b. The task must be continuously monitored and all actions taken recorded by:

(1) QAS, if an FMA is involved or

(2) Ship's Work Center LPO and a QAI, if the LPO is not a qualified QAI.

c. All OQE must be completed and inspected as required by Part I, Chapter 5 of this volume.

d. All records must be reviewed and verified complete and correct.

e. Departure from Specification will be processed in accordance with Part I, Chapter 8 of this volume for any specifications not met during the repair.

2.3.7.10 Standardized Formal Work Package.

a. FWPs, which have been performed and proven, may be retained on file to lessen the effort in preparing for a future task of a similar nature.

b. Standardized FWPs can be used to accomplish the same maintenance task without routing for approval provided the LPO/LWC supervisor and Planning Officer (if assigned) verify that no changes to the reference documents have been issued since initial approval. When initially routed for approval as a standardized FWP, the RADCON OFFICER/Chemistry and Radiological Controls Assistant (CRA) will determine the need for evaluating RADCON for future maintenance actions. If the RADCON OFFICER/CRA determined it is necessary to evaluate RADCON for each future maintenance action the RADCON OFFICER/CRA will check “YES” in CHOP FOR FURTHER USE?. When ”YES” is checked RADCON personnel are required to review the standardized FWP prior to each instance of use to verify RADCON controls in the standardized FWP are appropriate for the work. If the RADCON OFFICER/CRA determined it is not necessary to evaluate RADCON for each future maintenance action the RADCON OFFICER/CRA will check ”NO” in CHOP FOR FURTHER USE? When ”NO” is checked no additional RADCON review is required prior to use of the standardized procedure. If the LPO/LWC supervisor or RADCON personnel (when required) determine the FWP requires a change, it must be routed for approval as a revision to the FWP.

c. Standardized FWPs developed by FMAs may be used by Ship's Force. Implementation requires Division Officer recommendation and Department Head approval.

d. Standardized FWPs developed by an FMA may be used at any FMA. Implementation requires Planning Officer recommendation and Department Head approval.

e. Use of standardized FWPs requires a system to ensure the FWP is current.

(1) Maintain a master listing of standardized FWPs by name and revision number.

(2) Once approved as a standard FWP the cover sheet will be removed, annotated as master copy, and retained on file.

(3) A copy of the approved master cover sheet will be attached to the standard FWP when work is in progress.

(4) All revision cover sheets will be retained with the previous master cover sheet.

2.3.7.11 Lost Controlled Work Packages Following Controlled Work Package Approval.

a. Formally inform the ISIC and Type Commander.

b. Conduct a formal critique for CWPs approved/opened and not closed, and provide a copy to the ISIC and Type Commander.

c. Initiate corrective action using a QA form 14.

2.4 TROUBLESHOOTING.

a. Troubleshooting a system which is being operated in accordance with the normal ship's operating procedures in normal operation in response to a request for on-site Fleet Technical Assistance does not require an FWP provided the troubleshooting is non-obtrusive (i.e., visual inspection/observations only) and intended to evaluate the nature of the reported problem. Any manipulation of the system outside normal operating conditions requires an FWP.

b. Troubleshooting equipment normally controlled by using an FWP/TWD, whether done by Ship's Force or by an outside activity, can seldom be precisely defined at the start of corrective maintenance. An FWP for troubleshooting shall include well-defined initial conditions, boundaries and stop points within which troubleshooting can be accomplished. Detailed procedural steps are not required. Troubleshooting procedure may require some form of trial and error process of elimination. In order to determine the proper tests following troubleshooting, a record of actions performed shall be kept. Once the problem is identified, the FWP shall be revised to properly repair and test the affected equipment.

APPENDIX A

TECHNICAL WORK DOCUMENT ILLUSTRATION

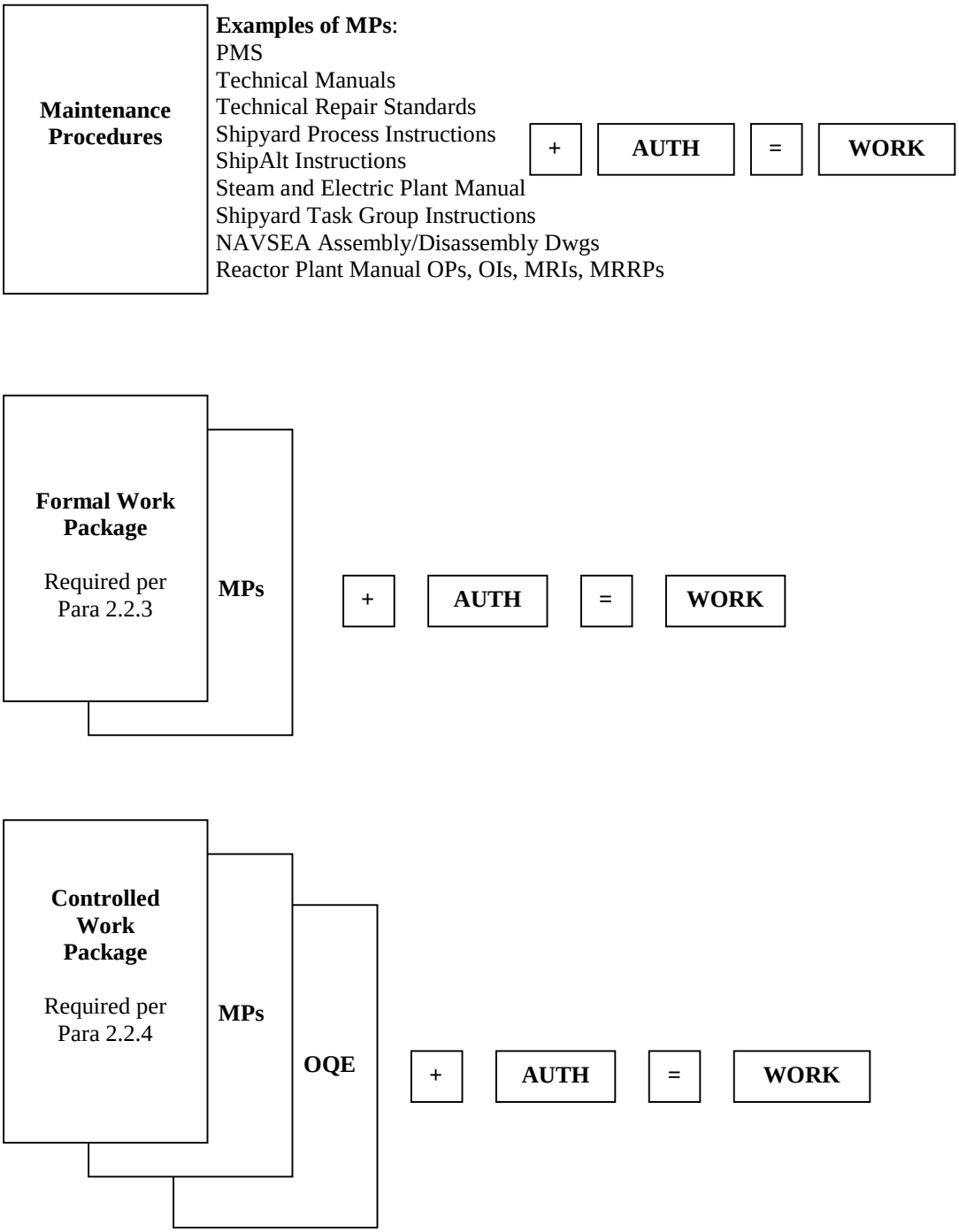

(This Page Intentionally Left Blank)

APPENDIX B

WORK PACKAGE DECISION PROCESS

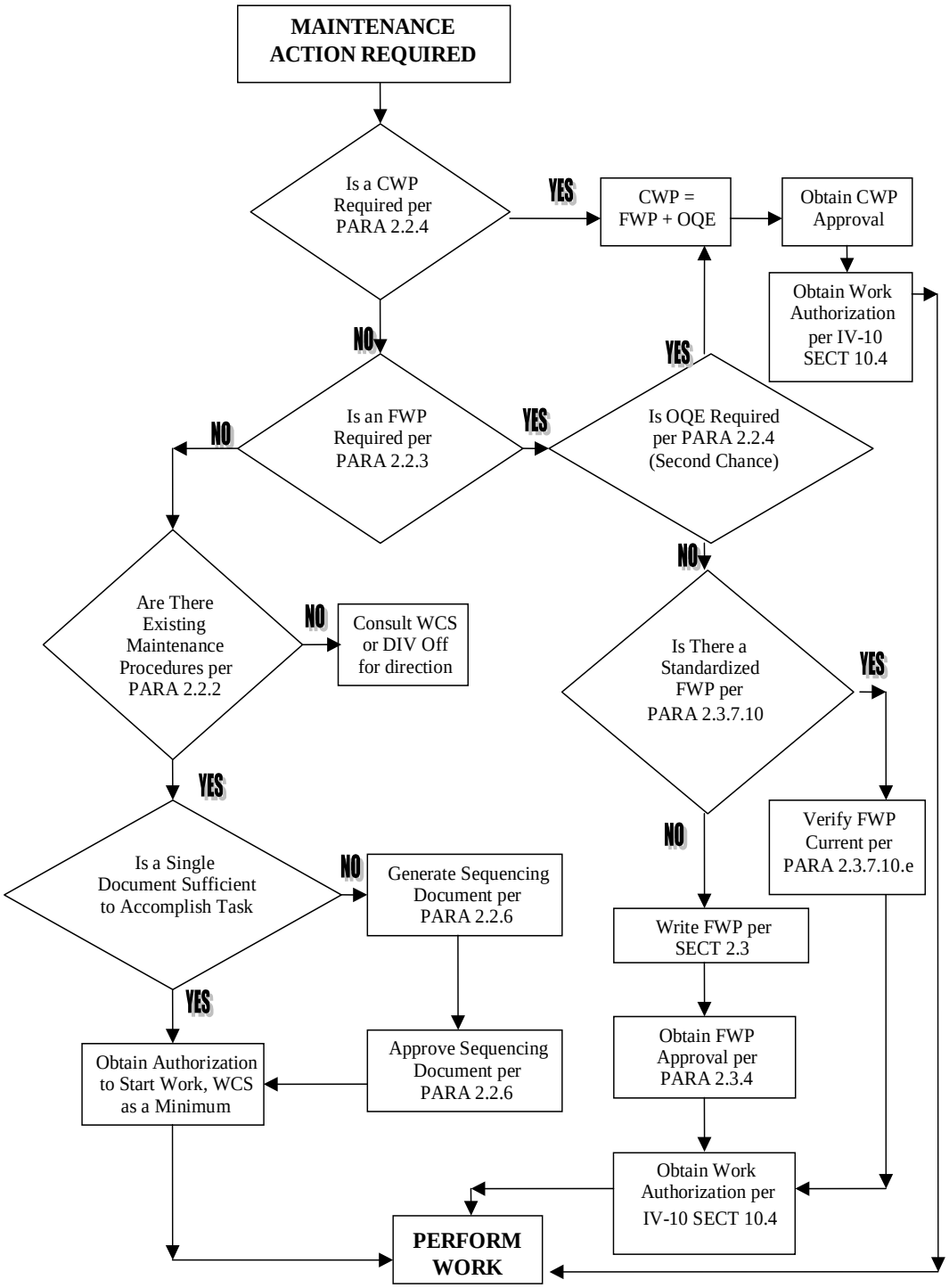

(This Page Intentionally Left Blank)

APPENDIX C

FORMAL WORK PACKAGE APPROVAL/REVISION SHEET

FWP NUMBER _____ REVISION

TASK _____

_____

_____

LEAD DIVISION/WORK CENTER _____ ORIGINATOR _____

REVIEWED BY:

AWC LPO/SUPERVISOR _____ AWC DIVISION OFFICER _____

AWC LPO/SUPERVISOR _____ AWC DIVISION OFFICER _____

AWC LPO/SUPERVISOR _____ AWC DIVISION OFFICER _____

NRO _____ P&E OFFICER _____

RADCON OFFICER/CRA _____CHOP FOR FURTHER USE?_____YES____NO

DIVISION LPO/LWC SUPERVISOR _____ LWC DIVISION OFFICER _____

APPROVED: _____

DEPT HEAD DATE

THIS STANDARDIZED FWP HAS BEEN VERIFIED TO BE THE LATEST REVISION AND CONTAINS THE CURRENT REFERENCES. THE RADCON OFFICER/CRA HAS/HAS NOT (CIRCLE ONE) VERIFIED THIS FWP FOR CURRENT RADIOLOGICAL CONDITIONS.

_____

LWC SUPERVISOR/LPO DATE

_____

PLANNING OFFICER (IF APPLICABLE) DATE

_____

REVISIONS/CHANGES AND SUMMARY: (APPROVAL SHEET) OR INSTRUCTIONS FOR ENTERING REVISION

LTR: DESCRIPTION DATE ENTERED

REVIEWED FOR SATISFACTORY COMPLETION AND CLOSEOUT

AWC LPO/SUPERVISOR_____ LWC LPO/SUPERVISOR _____

(This Page Intentionally Left Blank)

APPENDIX D

TECHNICAL WORK DOCUMENT REVIEW AND APPROVAL MATRIX

TWD TYPE	Work Performed By	Opening (1)									Closing (1)				
		P&E OFF	AWC DIV OFF	LWC DIV OFF		QAO	DEPT HEAD (4)	SHIP ENG	SHIP CO	ISIC	AWC DIV OFF	LWC DIV OFF	QAO	DEPT HEAD	SHIP CO
MP	SF			R											
	FMA	R	R	R											
FWP	SF		R	R (2)			A				R (8)	A (8)			
	FMA	R (2)	R	R			A				R (8)	A (8)			
SF Prepared CWP	Other		R	R		R	A				R	R	R	A (4)	
	L/I		R	R		R	A				R	R	R	A (4)	
	O2		R	R		R	R	A			R	R	R	A	
	NUC		R	R		R	R	A	A (3)	R (6)	R	R	R	R (4)	A (3)
	SS/SOC		R	R		R	R	A			R	R	R	A (5)	S
	SFCC		R	R		R	R	A			R	R	R	A	S
RMC/ FMA Prepared CWP	Other	R	R	R		R	A				R	R	R	A (4)	
	L/I	R	R	R		R	A				R	R	R	A (4)	
	O2	R	R	R		R	A	S (7)			R	R	R	A (4)	S (7)
	NUC	R (9)	R	R		R	A	S (3)(7)		R (6) (10)	R	R	R	A (4)	S (3)(7)
	SS/SOC	R	R	R		R	A	S (7)			R	R	R	A (4)	S (7)
	SFCC	R	R	R		R	A	S (4)			R	R	R	A	S

Notes:

1. R = Review (May require signature on FWP Cover Sheet and/or QA-9),
   A = Approve (Approval Signified by signature on FWP Cover Sheet and/or QA Form 9),
   S = Acknowledgement signature noting that the REC or CWP has been opened/closed by the approving authority. For opening, this signature also grants permission for work to be conducted. Review and/or Approval signifies the following:
   - The FWP is correct both in sequence and requirements to satisfactorily accomplish the maintenance.
   - The CWP provides the correct technical specifications or requirements (e.g., torque values, dimensions, NDT inspections, cleanliness requirements, critical inspections, recertification tests) for certification attributes on the appropriate QA form.
2. For FWPs previously approved by the Department Head, the FWP may be authorized and issued as a standardized FWP per paragraph 2.3.7.10 of this chapter.
3. (Nuclear aircraft carriers only) The Reactor Officer will sign.
4. For items requiring Department Head approval the following signature requirements shall apply:
   FMA - Repair Officer (unless formally delegated for Other and L/I)
   SF - Cognizant Department Head (Principal Assistant for aircraft carriers)
5. Entries are to be signed by the Ship's Engineer only.
6. (Submarines only) ISIC Material Officer will review SF CWPs for retesting FMA accomplished nuclear work.
7. This block is not applicable for FMA only MCR/RECs.

8. Accomplished by WC Supervisor.
9. Nuclear Repair Officer if assigned.
10. Applicable to Fleet I-Level activities only. Does not apply to I-Level activities controlled by Naval Shipyards.

VOLUME V

PART I

CHAPTER 3

PERSONNEL QUALIFICATION AND TRAINING

REFERENCES.

(a) NAVEDTRA 43523 - Personnel Qualification Standard for Quality Maintenance Program
(b) COMSUBFORINST C5400.30 - Engineering Department Organization Manual
(c) NAVSEAINST C5511.32 - Safeguarding of Naval Nuclear Propulsion Information
(d) MIL-STD-1330 - Standard Practice for Precision Cleaning and Testing of Shipboard Oxygen, Helium, Helium-Oxygen, Nitrogen and Hydrogen Systems
(e) NAVSEA T9044-AD-MAN-010 - Requirements Manual for Submarine Fly-By-Wire Ship Control Systems

LISTING OF APPENDICES.

A Outlines of Typically Effective Training Topics
B Recommended Training Topics for Selected Positions
C NAVEDTRA 43523 Qualification Matrix

3.1 PURPOSE. To define the requirements and guidance necessary to establish a standard qualification and training program for personnel who plan, perform, inspect or supervise the maintenance tasks listed in Chapter 2, paragraph 2.2.1 of this volume.

3.2 GENERAL. Personnel who screen, plan, perform, inspect and supervise the maintenance tasks listed in Chapter 2, paragraph 2.2.1 of this volume shall be trained and qualified in accordance with this volume and reference (a) including the maintenance listed as Material Certification Record (MCR)/Re-Entry Control (REC) exceptions per Part I, Chapter 2, paragraph 2.2.5 and Part I, Chapter 5, paragraph 5.10.7 of this volume.

3.2.1 Discussion. A continuing training and qualification program is essential for all maintenance personnel to achieve a maintenance program with high standards of quality. Personnel involved in the approval, supervision, planning or performance of shipboard maintenance will be participants in the training and qualifications associated with this volume.

3.2.2 Training. The training topics of Section 3.5 of this chapter should be fully integrated into the Engineering Department Training Plan in accordance with reference (b). Appendix A provides information on program elements normally contained in effective maintenance training programs. It is provided as information only and is not a mandatory listing. Appendix B provides recommended training topics for mechanics, Nondestructive Test (NDT) technicians, welders and planners.

3.3 QUALIFICATION. Qualification procedures established herein shall be formal, and designed to heighten awareness of those tasked with the responsibility of administering, managing and executing the Fleet Quality Maintenance (QM) program.

a. Each organization shall maintain a personnel qualification list per Part I, Chapter 10, of this volume.

b. Each organization shall maintain a list of personnel authorized to sign off portions of reference (a).

c. Maintenance personnel shall be qualified through completion of formal qualification programs (e.g., Job Qualification Requirements/Personnel Qualification Standard (PQS), written exams, oral boards and formal schools). Reference (a) provides the standard PQS for the majority of QM qualifications. Appendix C provides a qualification matrix for maintenance personnel PQS requirements.

d. All personnel performing the maintenance identified in Part I, Chapter 2, paragraph 2.2.1 of this volume shall be 3-M 301 qualified and Craftsman 301 qualified or an equivalent Quality Assurance (QA) qualification for non-naval personnel.

3.3.1 Re-qualification. Personnel with prior documented qualifications may be re-qualified by written exam and/or oral board as directed by Quality Assurance Officer (QAO) or Department Head. Personnel found to be deficient in level of knowledge will be required to complete an upgrade program established by the QAO prior to re-qualification.

3.3.2 Maintenance of Qualification. All personnel involved with planning, performing and supervising controlled work will be trained on topics of Section 3.5 of this chapter, using the following guidance:

a. Incorporate the topics outlined in Section 3.5 of this chapter into the Engineering Department's long and short range training schedules.

b. Include the training with existing topics where possible (i.e., Controlled Material Petty Officer (CMPO) training held with Repair Parts Petty Officer training). However, some areas may require separate training to be held.

c. Joint training between departments and organizations is acceptable. The Department Head will coordinate with the QAO on training concerning QM. It is not the intent to create a separate training program, nor is the intent to hold one annual training session that covers all of the topics.

d. In order to assess the effectiveness of the training program, the QAO should:

(1) Periodically monitor training.

(2) Assess knowledge level retention in conjunction with the conduct of annual QM program assessment.

3.3.3 Required Service Record Entries. Record of qualification will be inserted in the individual's service record.

3.4 QUALIFICATION REQUIREMENTS.

3.4.1 Ship's Quality Assurance Officer.

a. Should be a commissioned officer with engineering/repair experience.

b. (Submarines only) Submarine officer must have completed submarine qualification and for nuclear powered ships should be nuclear trained.

c. Designated in writing by the Commanding Officer.

d. QA Officer course requirements are as follows:

(1) A surface ship QAO shall be a qualified Quality Assurance Supervisor (QAS) and shall be a graduate of a QAO course.

(2) A submarine QAO shall be a graduate of the Submarine Officers' and Supervisors' Quality Maintenance course, F-4H-0182. No other formal PQS qualification is required. With a formal waiver (Naval message or letter) endorsed by the Immediate Superior In Command (ISIC) and approved by the Type Commander (TYCOM), this requirement can be temporarily waived by the TYCOM but the waiver may not exceed 6 months. The waiver must list the interim QAO and qualifications, the perspective QAO and graduation date from F-4H-0182 and/or the report date.

(3) An aircraft carrier QAO shall be a graduate of the 5-week Quality Assurance Officer Course (S-4H-0001) for CVN officers. No other formal PQS qualification is required. With a formal waiver (Naval message or letter) endorsed by the ISIC and approved by the TYCOM, this requirement can be temporarily waived but the waiver may not exceed 6 months. The waiver must list the interim QAO and qualifications, the perspective QAO and graduation date from S-4H-0001 and/or the report date.

e. (Submarines only) Complete an oral interview with the ISIC or submarine support component QAO.

3.4.2 Ship's Assistant Quality Assurance Officer.

a. Normally E-6 or above with engineering/repair experience.

b. Designated in writing by the Commanding Officer.

3.4.3 Immediate Superior In Command.

a. Quality Assurance Officer.

(1) Should be a commissioned officer, but may be a civilian with engineering/repair experience.

(2) Should be a graduate of a QAO course. No other formal PQS qualification is required.

(3) Designated in writing by the ISIC.

b. Assistant Quality Assurance Officer.

(1) Normally E-7 or above, but may be a senior civilian with engineering/repair experience.

(2) Should be a graduate of a QAO course.

(3) Qualified as QAS. QAS qualification is not required if he/she is a graduate of the Norfolk Naval Shipyard Fleet Maintenance Support Branch QAO course.

(4) Designated in writing by the Commanding Officer. The duties assigned, including signature authority, shall be clearly delineated.

3.4.4 Regional Maintenance Center/Fleet Maintenance Activity Quality Assurance Officer.

a. Should be a commissioned officer, but may be a civilian with engineering/repair experience.

b. Will not be assigned collateral duties or responsibilities that divert attention from primary duties of QM.

c. Should be a graduate of a QAO course. No other formal PQS qualification is required.

d. Designated in writing by the Commanding Officer.

3.4.5 Regional Maintenance Center/Fleet Maintenance Activity Assistant Quality Assurance Officer.

a. Normally E-7 or above, but may be a senior civilian with engineering/repair experience.

b. Qualified as QAS or a graduate of a QAO course.

c. Designated in writing by the Commanding Officer.

3.4.6 Quality Assurance Supervisor.

a. Normally E-6 or above, but may be a civilian.

b. Complete PQS for QAS, and pass a written examination and oral board.

c. QAS is a mandatory qualification for Fleet Maintenance Activities (FMA). Qualification of QAS for ships is at the TYCOM's discretion.

3.4.7 Quality Assurance Inspector.

a. Normally a petty officer, but may be a civilian.

b. Complete PQS for Quality Assurance Inspector (QAI) and pass a written exam and oral board.

c. The qualification card may be split into separate nuclear and non-nuclear QAI qualifications. If this is done, the command must ensure QAIs do not inspect areas excluded from their qualifications.

3.4.8 Controlled Material Petty Officer/Controlled Material Handler.

a. Normally a petty officer, but may be a civilian.

b. Complete PQS for CMPO/Controlled Material Handler (CMH), and pass a written exam and oral board.

c. Activities may modify the qualification card to allow CMPO/CMH qualification for specific materials only. If this is done, commands must have a method to ensure CMPOs/CMHs do not handle material excluded from their qualification.

3.4.9 Steam Plant Cleanliness Inspector/Certifier.

a. Normally a petty officer, but may be a civilian.

b. Complete PQS for Steam Plant Cleanliness Inspector and pass a written exam and oral board.

NOTE: INFORMATION ON THE QUALIFICATION REQUIREMENTS FOR REACTOR PLANT CLEANLINESS INSPECTOR/CERTIFIER IS SAFEGUARDED IN ACCORDANCE WITH REFERENCE (c) AND IS CONTAINED IN PART II, CHAPTER 1 OF THIS VOLUME.

3.4.10 Gas Systems Cleanliness Inspector/Certifier.

a. Normally a petty officer, but may be a civilian.

b. Satisfactorily complete an Oxygen Clean Worker course of instruction in accordance with reference (d).

3.4.11 Oxygen Clean Instructors. An Oxygen Clean Instructor will be certified in accordance with reference (d). Oxygen Clean Instructors will re-qualify every three years. If an individual is scheduled for transfer within six months after the expiration of qualification, it is permissible to extend the qualification until transfer. The local command may exempt the senior instructor from re-qualification.

3.4.12 Ship's and Fleet Maintenance Activity Oxygen Clean Workers. Oxygen Clean Workers will be certified in accordance with reference (d). Oxygen Clean Workers will re-qualify every three years. If an individual is scheduled for transfer within six months after the expiration of qualification, it is permissible to extend the qualification until transfer.

3.4.13 Oxygen Calibration Technicians. Oxygen Calibration Technicians qualify to perform oxygen instrument cleaning and calibration by satisfactory completion of Oxygen Calibration School. Naval Sea Systems Command certifies successful candidates for two years following a report of satisfactory completion of Oxygen Calibration School. Local Regional Maintenance Center re-certifies Oxygen Calibration Technicians during the calibration capability reviews of FMAs or Strategic Systems Program Office capabilities and proficiency evaluation of SSBN/SSGN FMAs.

3.4.14 Work Center Supervisors and Planners. The qualification of QA Maintenance Planners and QA Work Center Supervisors is required in all work centers that perform corrective maintenance tasks outlined in Chapter 2, paragraph 2.2.1 of this volume. Work Center Supervisors and Maintenance Planners will, as a minimum, complete the applicable qualifications of reference (a) prior to performing any unsupervised maintenance tasks. QA Maintenance Planners prerequisite qualifications (QAI and Cleanliness Inspector) may be deleted in work centers that do not perform controlled work. Activities with separate planning organizations are exempt from having planners assigned to individual work centers.

3.4.15 Qualification Requirements for Submarine Nuclear Propulsion Plant Operator Welders (Navy Enlisted Classification Code 3351 and Supervisor Welders 3361).

NOTE: INFORMATION ON THIS SUBJECT IS SAFEGUARDED IN ACCORDANCE WITH REFERENCE (c) AND IS CONTAINED IN PART II, CHAPTER 1 OF THIS VOLUME.

3.4.16 Qualification Requirements for Submarine Fly-By-Wire Ship Control System Maintenance Technician (Navy Enlisted Classification Code 14NP). Qualification requirements will be in accordance with paragraph 2.2 of reference (e).

3.5 TRAINING.

NOTE: PERSONNEL INVOLVED IN PERFORMING MAINTENANCE ON NUCLEAR SYSTEMS/COMPONENTS WILL ALSO BE TRAINED IN THE REQUIREMENTS OF PART II, CHAPTER 1 OF THIS VOLUME.

3.5.1 Maintenance Personnel Training. Using Appendices A and B of this chapter and Part II, Chapter 1, Appendix A of this volume (where applicable), the QAO shall provide a list of applicable training topics to the Engineer and Engineering Department Master Chief for various ship's departments for inclusion in the training plans for their work centers. These topics shall be reviewed and updated annually or whenever a new long range training plan is generated. Findings from QA form 14s, audits, assessments and surveillance should be included, when appropriate, to re-emphasize the most recent problems experienced in the department.

3.5.2 Quality Assurance Training. The QAO shall submit to the Engineer and Engineering Department Master Chief a separate advanced training program for personnel responsible for planning, approving, inspecting or supervising maintenance on systems/equipment included in the QM Program. At a minimum, the following items shall be covered:

a. Requirements and generation of a controlled work package and formal work package including objective quality evidence, required inspections and critical QM points.

b. Material certification, control and stowage requirements.

c. In-process control including torquing, controlled assembly, system cleanliness requirements for specific systems (e.g., air systems, hydraulic systems) and common mistakes noted in completed QA forms.

d. Testing.

e. Departure from specifications.

3.5.3 Submarine Safety Awareness Training (Submarines and Submarine Repair Facilities only). All hands shall receive Submarine Safety (SUBSAFE) awareness and Fly-By-Wire Ship Control (if assigned to, work on or over-see 21 Class or 774 Class submarines) training during initial indoctrination and annually thereafter. ISIC and TYCOM staff members that routinely review SUBSAFE objective quality evidence, make determinations on SUBSAFE Departures from Specifications and perform other SUBSAFE work oversight will receive annual SUBSAFE awareness training to keep knowledge and proficiency levels high.

APPENDIX A

OUTLINES OF TYPICALLY EFFECTIVE TRAINING TOPICS

1. Work Authorization.

   a. Topic.

      (1) Work authorization forms.

      (2) Tag-outs.

      (3) Safety requirements.

      (4) Ship responsibility for outside activity maintenance.

   b. Reference: COMFLTFORCOMINST 4790.3; Joint Fleet Maintenance Manual, Volume V.

2. Formal Work Package/Controlled Work Package documentation.

   a. Topic.

      (1) Record retention requirements.

      (2) Mandatory documents.

      (3) Routing of documents and signature documents.

      (4) Test requirements for FMA work.

   b. Reference: COMFLTFORCOMINST 4790.3; Joint Fleet Maintenance Manual, Volume V.

3. In Process Control.

   a. Topic.

      (1) Torquing.

      (2) Controlled assembly.

      (3) Cleanliness requirements for:

         (a) Air systems.

         (b) Hydraulic systems.

         (c) Reactor plant (nuclear powered ships only).

         (d) Steam plant (non-nuclear and nuclear powered ships).

         (e) Oxygen/Nitrogen systems.

         (f) Seawater systems.

(g) Lubricating systems.

(h) Gas Turbine systems.

(i) Fuel systems.

(j) Diesel systems.

(4) Use of formal work packages.

(5) Control of fasteners. (Include avoidance of carbon steel in seawater systems).

(6) Material control.

(7) Re-work.

(a) Administration.

(b) Root cause and corrective action.

(8) Revisions: Administration.

(9) Critical QM points.

(10) Procedural compliance.

(11) Submarine antenna work including mast clamps.

(12) Departure from specifications.

(13) Submarine Flight Critical Components

b. References.

(1) COMFLTFORCOMINST 4790.3; Joint Fleet Maintenance Manual, Volume V.

(2) NAVSEA 0902-018-2010; General Overhaul Specifications for Deep Diving SSBN/SSN Submarines (DDGOS).

(3) NAVSEA S9505-AM-GYD-010; Submarine Fastening Criteria (Non-Nuclear), Description, Design and Maintenance.

(4) NAVSEA S9520-AA-MMA-010; Repair of Submarine Seawater Ball Valves (Non-Nuclear).

(5) Naval Ship's Technical Manuals (NSTM).

(6) MIL-STD 1330; Standard Practice for Precision Cleaning and Testing of Shipboard Oxygen, Helium, Helium-Oxygen, Nitrogen and Hydrogen Systems.

(7) NAVSEA 0900-LP-016-6080; QA Standard for Submarine Antenna and Mast Assemblies.

(8) NAVSEA S9AA0-AB-GOS-010/020/030; General Specifications for Overhaul of Surface Ships (GSO); AEGIS Supplement.

(9) NAVSEA T9044-AD-MAN-010 - Requirements Manual for Submarine Fly-By-Wire Ship Control Systems.

4. Testing.

a. Topic.

(1) Hydrostatic test rig requirements including calibration.

(2) Test pressure drawings.

(3) Air blast/vacuum and other tests.

(4) Use of FMA and shipyard test plans/procedures.

(5) Conducting hydrostatic tests and completing hydrostatic test forms (including common mistakes).

(6) NDT alternative in testing.

b. References.

(1) COMFLTFORCOMINST 4790.3 Joint Fleet Maintenance Manual, Volume V.

(2) Test Pressure Drawings.

(3) NAVSEA S9505-AF-MMA-010; Submarine Non-Nuclear Piping System Test Manual.

(4) NAVSEA 0902-018-2010; General Overhaul Specifications for Deep Diving SSBN/SSN Submarines (DDGOS).

(5) NAVSEA S9086-RK-STM-010; NSTM Chapter 505 (Piping Systems).

(6) NAVSEA S9AA0-AB-GOS-010/020/030); General Specifications for Overhaul of Surface Ships (GSO); AEGIS Supplement.

5. Material Certification.

a. Topic.

(1) SUBSAFE material requirements.

(2) Level I material requirements.

(3) Level I material exceptions.

(4) Use of drawings for Quality Assurance Lists.

(5) Submarine antenna material.

(6) Upgraded systems to Level I requirements.

(7) Upgrading components to meet Level I and SUBSAFE requirements.

(8) Submarine Flight Critical Components requirements.

b. References.

(1) SUBSAFE Certification Boundary Book.

(2) Joint Identification Plans/Mapping Plans.

(3) COMFLTFORCOMINST 4790.3; Joint Fleet Maintenance Manual, Volume V.

(4) Ship's Coordinated Shipboard Allowance List (COSAL).

(5) NAVSEA 0948-LP-045-7010; Material Control Standard (Non-Nuclear).

(6) NAVSEA/NAVSUPINST 4855.1; Quality Assured Submarine Antenna Material: Policy and Procedures for Control and Implementation.

(7) Applicable Class Material Identification and Control of Piping Systems Boundary Book.

(8) NAVSEA T9044-AD-MAN-010 - Requirements Manual for Submarine Fly-By-Wire Ship Control Systems.

6. Material Procurement/Receipt Inspection.

a. Topic.

(1) SUBSAFE/Level I/Submarine Flight Critical Component material.

(2) Material substitution.

(3) Stowage requirements for controlled material.

(4) Ship's COSAL.

b. References.

(1) COMFLTFORCOMINST 4790.3; Joint Fleet Maintenance Manual, Volume V.

(2) NAVSEA 0948-LP-045-7010; Material Control Standard (Non-Nuclear).

(3) NAVICPINST 4355.5; Receipt, Inspection, Storage and Issue of Level I/SUBSAFE Material.

(4) NAVSEA 0948-LP-103-6010; Level I/SUBSAFE Stock Program Catalog, (Part I - Submarine Items, Part II - Surface Ship Items).

(5) Applicable Class Material Identification and Control of Piping Systems Boundary Book.

(6) NAVSEA T9044-AD-MAN-010 - Requirements Manual for Submarine Fly-By-Wire Ship Control Systems.

7. SUBSAFE.

a. Topic.

(1) Determination of SUBSAFE/Hull Integrity boundaries.

(2) Use of QA forms and tags.

(3) Torquing of hull integrity fasteners.

(4) Generation of an MCR/REC.

(5) Unrestricted Operation/Periodic Maintenance Requirement.

(6) Departure from Specification requirements.

(7) REC exceptions.

(8) Positive material identification requirements for hull integrity fasteners.

b. References.

(1) SUBSAFE Certification Boundary Book.

(2) NAVSEA 0924-LP-062-0010; Submarine Safety (SUBSAFE) Requirements Manual.

(3) COMFLTFORCOMINST 4790.3; Joint Fleet Maintenance Manual, Volume V.

(4) Applicable Unrestricted Operation Maintenance Requirement Card program technical manual.

8. Audit and Surveillance (for personnel performing).

a. Topic.

(1) Audit/surveillance requirements.

(2) Purpose of audit and/or surveillance program.

(3) Preparing for and conducting an audit including specific discussion of techniques to be used to make audits effective and useful to the organization.

(4) Preparing for and conducting a surveillance includes a specific discussion of techniques to be used to make surveillance effective and useful to the organization.

(5) Documenting an audit or surveillance.

(6) Root cause identification.

(7) Trends and trend analysis.

b. Reference: COMFLTFORCOMINST 4790.3; Joint Fleet Maintenance Manual, Volume V.

9. Additional Training Topics.

a. Weight handling equipment testing, use and safety.

b. Oxygen/Nitrogen plant maintenance.

c. Working aloft and Sail Safety.

d. Combat systems maintenance requirements.

e. Electrical safety.

f. Welding.

g. Brazing.

h. REC requirements on diving systems.

i. Cleanliness requirements for diving systems.

j. Controlled material requirements for diving systems.

10. Nuclear Training Topics.

NOTE: INFORMATION ON THIS SUBJECT IS SAFEGUARDED IN ACCORDANCE WITH NAVSEAINST C5511.32 AND IS CONTAINED IN PART II, CHAPTER 1 OF THIS VOLUME.

APPENDIX B

RECOMMENDED TRAINING TOPICS FOR SELECTED POSITIONS

1. Experience has shown that effective training should be related to job skills required by the individual.

a. Mechanical craftsmen should cover areas like:

(1) Tools and their uses.

(2) Shop safety.

(3) Work authorization.

(4) Material identification.

(5) Rework and their causes.

(6) Valve construction and methods to perform:

(a) Stack height measurements.

(b) Blue checks.

(c) Lapping of a valve seat.

(7) Pump construction and methods to perform:

(a) Mechanical seal replacement.

(b) Alignments.

(8) Testing requirements.

(9) Cleanliness requirements.

(10) Technical manuals and their usage.

(11) Drawings and their usage.

(12) Work packaging administration.

b. NDT inspectors and welders should cover the following areas:

(1) NAVSEA S9074-AR-GIB-010/278; Requirements for Fabrication Welding and Inspection, and Casting Inspection and Repair for Machinery Piping and Pressure Vessels.

(2) NAVSEA T9074-AD-GIB-010/1688; Fabrication, Welding and Inspection of Submarine Structures.

(3) MIL-STD-1689 (for Surface Ships only); Fabrication, Welding and Inspection of Ship's Structures.

(4) NAVSEA 0900-LP-001-7000; Fabrication and Inspection of Brazed Piping Systems.

(5) NAVSEA T9074-AS-GIB-010/271; Requirements for Nondestructive Testing Methods.

(6) MIL-STD-2132; Nondestructive Examination Requirements for Special Applications.

(7) Material control.

(8) Cleanliness.

(9) Work package administration.

c. Planners should cover the following areas:

(1) SUBSAFE program.

(2) Level I program.

(3) QA forms.

(4) Welding requirements.

(5) Manufacturing specifications.

(6) Cleanliness requirements and specifications.

(7) Hydrostatic testing.

(8) Material control.

(9) Manufactured fittings specifications.

(10) Plant conditions.

(11) System flushes.

(12) NDT requirements.

(13) Testing requirements.

(14) Index of technical publications.

(15) Military standards and specifications.

(16) Selected record drawings/ship's drawing index.

(17) Maintenance data systems.

(18) Blue print reading.

(19) For activities involved in Scope of Certification maintenance:

(a) NAVSEA SS800-AG-MAN-010/P-9290, System Certification Procedures and Criteria Manual for Deep Submergence System.

(b) Scope of Certification material control classification.

(c) Implodability.

(20) Submarine Flight Critical Components.

2. Proven training methods include the use of mockups and training aids that show practical application of the lecture material. Hands on mockup training, performed by the workers is the most highly effective method followed by the demonstration of skills by the instructor.

3. Nuclear Training Topics.

NOTE: INFORMATION ON THIS SUBJECT IS SAFEGUARDED IN ACCORDANCE WITH NAVSEAINST C5511.32 AND IS CONTAINED IN PART II, CHAPTER 1 OF THIS VOLUME.

(This Page Intentionally Left Blank)

APPENDIX C

NAVEDTRA 43523 QUALIFICATION MATRIX

WATCHSTATION	PRE-REQUISITE WATCHSTATIONS	PRE-REQUISITE FUNDAMENTALS
301 Craftsman	None	101 Quality Maintenance Safety Precautions 102 Quality Maintenance Administration 103 Quality Maintenance Program 104 Craftsman
302 Controlled Material Petty Officer/Controlled Material Handler (CMPO/CMH)	301 Craftsman	105 Controlled Material Petty Officer/Controlled Material Handler (CMPO/CMH)
303 Steam Plant Cleanliness Inspector/Certifier (SCI)	301 Craftsman	106 Steam Plant Cleanliness Inspector/Certifier (SCI)
304 Reactor Plant Cleanliness Inspector/Certifier (RCI)	303 Steam Plant Cleanliness Inspector/Certifier (SCI)	107 Reactor Plant Cleanliness Inspector/Certifier (RCI)
305 Quality Assurance Inspector (QAI)	301 Craftsman 302 Controlled Material Petty Officer/Controlled Material Handler (CMPO/CMH)** 303 Steam Plant Cleanliness Inspector/Certifier (SCI)** 304 Reactor Plant Cleanliness Inspector/Certifier (RCI)**	109 Quality Assurance Inspector (QAI)
306 Fleet Maintenance Activity (FMA) Planner	301 Craftsman	106 Steam Plant Cleanliness Inspector/Certifier (SCI) 107 Reactor Plant Cleanliness Inspector/Certifier (RCI) 108 Gas Systems Cleanliness 109 Quality Assurance Inspector 110 Planner
307 Work Center Supervisor (WCS)	301 Craftsman	105 Controlled Material Petty Officer/Controlled Material Handler (CMPO/CMH) ** 106 Steam Plant Cleanliness Inspector/Certifier (SCI) 107 Reactor Plant Cleanliness Inspector/Certifier (RCI) 108 Gas Systems Cleanliness 109 Quality Assurance Inspector 110 Planner 111 Work Center Supervisor
308 Quality Assurance Supervisor (QAS)	305 Quality Assurance Inspector (QAI)	108 Gas System Fundamentals 110 Planner 112 Quality Assurance Supervisor

** Noted in the PQS as Command/Specific. For these items the necessity for the pre-requisites will be determined by the type of work the individual/command performs and that individual's PQS should be tailored accordingly.

(This Page Intentionally Left Blank)

VOLUME V

PART I

CHAPTER 4

WELDER, BRAZER AND NONDESTRUCTIVE TESTING QUALIFICATIONS

REFERENCES.

(a) NAVSEA S9086-CH-STM-010 - NSTM Chapter 074 Volume 1 (Welding and Allied Processes)
(b) NAVSEA S9074-AQ-GIB-010/248 - Welding and Brazing Procedures and Performance Qualification
(c) NAVSEA 0900-LP-001-7000 - Fabrication and Inspection of Brazed Piping Systems
(d) NAVSEA T9074-AS-GIB-010/271 - Requirements for Nondestructive Testing Methods
(e) NAVPERS 18068 - Manual of Navy Enlisted Manpower and Personnel Classification and Occupational Standards
(f) NAVSEA S9086-CH-STM-020 - NSTM Chapter 074 Volume 2 (Nondestructive Testing of Metals Qualification and Certification Requirements for Naval Personnel (Non-nuclear))
(g) OPNAVINST 4790.4 - Ships' Maintenance and Material Management (3-M) Manual
(h) NAVSEAINST 9210.45 - Reactor Plant Welding and Nondestructive Testing Personnel
(i) NAVSEA 0948-LP-045-7010 - Material Control Standard
(j) NAVSEA 389-0317 - Procedures for Maintenance and Repair of Naval Reactor Plants (Nuclear)

4.1 PURPOSE. This chapter provides the requirements for qualification of Shipboard and Fleet Maintenance Activity Welders, Brazers, and Nondestructive Testing (NDT) personnel. Also included are qualification record requirements. The provisions of references (a) through (j) are amplified and expanded herein to ensure that all provisions of higher authority are implemented.

NOTE: ALTHOUGH THIS CHAPTER COVERS THE REQUIREMENTS FOR NAVY WELDERS, BRAZERS AND NDT PERSONNEL, THE PERFORMANCE QUALIFICATIONS FOR CIVILIAN WELDERS, BRAZERS AND NDT PERSONNEL WILL BE IN ACCORDANCE WITH REFERENCES (b), (c) AND (d) RESPECTIVELY.

4.1.1 General Requirements. Each activity is responsible for establishing that each welder or brazer is qualified by demonstrating their ability to produce sound and satisfactory joints in accordance with references (a) through (c). References (a), (e) and (f) define welder and NDT qualifications by Navy Enlisted Classification (NEC) codes.

4.1.2 Training.

NOTE: NO WELDER SHALL PERFORM QUALIFICATION OR PRODUCTION FABRICATION UNTIL AFTER RECEIPT OF THIS TRAINING AND PASS A WRITTEN EXAMINATION WITH A SCORE OF AT LEAST 75%.

a. Activities shall have a training program in accordance with references (b) and (d). Activities without a Level III examiner should obtain assistance from a Fleet Maintenance Activity.

b. For those welds or brazes not frequently performed for production, proficiency should be demonstrated by satisfactory completion of a mock-up of the weld or braze prior to performing production work.

4.2 GENERAL REQUIREMENTS FOR BRAZERS AND WELDERS.

a. The extent of welder qualification resulting from tests shall be governed by references (a) and (b). The extent of brazer qualification shall be governed by reference (c) for piping and pressure vessel applications.

NOTE: THE REQUIREMENTS ARE TAILORED TO THOSE OF REFERENCE (c), AS QUALIFIED PIPE BRAZERS ARE ALSO CONSIDERED QUALIFIED FOR ALL OTHER BRAZING WITHIN THE SCOPE OF THEIR PIPE QUALIFICATIONS (I.E., PROCESS, MATERIAL AND THICKNESS LIMITATIONS).

b. To provide uniformity and enhance the effectiveness of the welder/brazer program the following conditions shall apply:

(1) Once started, all qualifications shall be completed as expeditiously as possible. Therefore, personnel attempting to qualify shall be given ample opportunity to complete the qualification test in a timely manner. Qualification testing shall not be assigned if anticipated work load, leave schedules, shiftwork or other controllable factors will delay test assembly completion.

(2) No more than three qualification tests per welder or brazer will be in progress at any one time.

(3) For training purposes, the Welding or Brazing Shop Supervisor shall make arrangements with the NDT Supervisor to review the records (including radiographic film) of failed qualification test assemblies. The NDT Supervisor will discuss the results with the qualifier, focusing on the reasons for rejection, types and locations of defects found, and possible corrective actions. The arrangements should include welder/brazer observation of actual test results whenever possible.

(4) Because a welder or brazer meets the qualification requirements of a particular specification or standard does not always assure his/her proficiency in all phases of diversified production tasks for which he/she is qualified. To this end activities should strive for continual improvement, both in the qualification and proficiency of its welders and brazers.

c. Stud or Spot Welders. NEC 4955 welder or welding operator qualification is not required for operators of stud or spot welding equipment.

4.2.1 Eye Examination. Annual vision tests shall be passed by each brazer and welder. Vision tests shall be conducted by the medical department, cognizant NDT Examiner or delegated personnel, using standard methods for determining visual acuity. The standard for acceptance shall be natural or corrected near distance acuity such that the brazer/welder is capable of reading J1 letters on a standard Jaeger type chart. Equivalent visual tests may be used. Corrective aids used during the visual test shall be worn during qualification testing and production fabrication. Reference (b) contains the color test requirement for Titanium welders.

4.2.2 Brazing and Welding Procedures. Brazing and Welding procedures, qualified in accordance with references (b) or (c), as applicable, shall be on hand for all applications for which performance qualification is intended. Although not specifically required, the brazer/welder should use the procedural requirements for training and familiarity purposes during qualification testing.

4.2.3 Brazing and Welding Personnel Knowledge. Each brazer and welder shall receive documented training on the workmanship and detailed visual inspection requirements of fabrication documents used by the activity.

4.2.4 Brazer and Welder Identification Numbers. Upon meeting the requirements of this section, brazers and welders receive a unique identification number, issued by the respective Division Officer, for identification of brazing or welding performance.

4.2.4.1 Brazer and Welder Identification Number Log. The Division Officer shall maintain a log of unique identification numbers assigned to brazers/welders. The number assigned shall be alphanumeric as illustrated in the following example:

A -12 -B or W.

Where: A = First letter in brazer's or welder's last name.

12 = Sequential number alphabetical in list of personnel.

B or W = B for brazer or W for welder.

Each entry shall contain the date the number was assigned, the brazer/welder's name and signature, the identification number, the date the brazer/welder completed the initial training specified in paragraph 4.2.3 of this chapter and the brazer/welder's projected rotation date.

4.2.5 Validation of Qualification. All brazer/welder qualifications, re-qualification, and maintenance of qualification shall be valid only if original qualification is recorded in the individual's service record in accordance with reference (a). A service record entry (NAVPERS 1070/613) shall be made upon initial qualification, annually (not to exceed 12 months) and before transfer. This service record entry shall include all subsequent re-qualifications and the most current vision test results. The brazer/welder's Division Officer shall be responsible for ensuring these entries are made.

4.2.6 Qualification Records.

4.2.6.1 Individual Brazer/Welder Qualification File. In order to achieve proper monitoring of brazer/welder qualifications, the individual's Division Officer shall maintain an auditable file for each brazer/welder assigned. This file is to be maintained for each brazer/welder for as long as he/she is assigned to a command and transferred with the welder or brazer to their next command. These files shall include all information that is required by references (a), (b) and (c) and include the following:

a. Brazer/Welder identification number (name, rate, individual identification number).

b. Test date/Use of process date.

c. Qualification test number, process, position, base material type, filler material type and size, or brazing alloy type and size.

d. Test results (i.e., Accept/Reject). A statement as to the cause of rejection will be entered, if appropriate.

e. Record of omission of space restriction when not used on pipe tests.

f. Workmanship and visual inspection requirements examination results per reference (b).

g. Certifying signature (Division Officer or designated representative).

h. Vision test form:

(1) Identification.

(2) Test date.

(3) Test description.

(4) Test results.

(5) Corrective aids as required.

(6) Certifying signature (medical department, cognizant NDT Examiner or delegated personnel).

4.2.6.1.1 Maintenance of Qualification. Detailed records of maintenance of qualification need only be retained for the current and preceding quarter. In order to ensure proper maintenance of brazer/welder qualifications, a log shall be maintained by each Division Officer. This log shall include items a., b., d., and g. of paragraph 4.2.6.1 of this chapter. In addition, this log will also include the brazing or welding process (i.e., H-101, SMAW, GTAW, etc.) used during maintenance of qualification. This maintenance of qualification log may be a separate log from the brazer/welder file or it may be incorporated into the brazer/welder file as part of the file itself.

4.2.6.2 Method of Qualification Maintenance. Brazers and welders should maintain their qualifications on production jobs. If production work is unavailable, a brazing test assembly or test assembly weld joint meeting the requirements of reference (b) for welders and reference (c) for brazers may be used. Only joints meeting all applicable acceptance criteria will be used for this purpose. Surface Ships lacking NDT personnel may only allow the brazer/welder qualification to lapse with Type Commander approval. If a joint is assembled by personnel whose qualifications have lapsed or without the support of qualified NDT personnel, a Departure from Specification must be submitted and the joint must be reassembled using qualified personnel during the next maintenance support opportunity.

4.2.6.3 Renewal of Qualification. Renewal of qualification shall be in accordance with reference (b) for welders, and reference (c) for brazers.

4.2.7 Effective Date of Qualification. Effective date of qualification shall be from the date that the test assembly brazing/welding is complete. Initial qualification is effective only after the final NDT is completed but the date of qualification is the date the weld or braze was completed. For re-qualification the re-qualification is only effective after the final NDT is completed but the effective qualification date must be the day the weld or braze was completed.

4.2.7.1 Qualification Results. The NDT Supervisor shall ensure that:

a. Qualification results are forwarded to the brazer/welder Division Officer.

b. Each test assembly is marred, marked, or otherwise identified so as to preclude its re-use.

4.3 BRAZER QUALIFICATIONS.

4.3.1 Prerequisite. Prior to performing any qualification or production brazing the brazer must have successfully completed training in workmanship and detailed visual inspection requirements and passed a written examination with a grade of no less than 75%. The training and examinations for all brazers will be based on the requirements set forth in reference (c).

4.3.1.1 Qualification Test. A brazer qualification shall be in accordance with reference (c) for piping and pressure vessels.

4.3.2 Limitations. Limitations will be in accordance with reference (c).

4.3.3 Test Assembly Evaluation. Test assemblies shall be visually and ultrasonically inspected or a peel test may be conducted as specified in reference (c).

4.3.4 Maintenance of Qualification. A brazer maintains his/her qualifications by using the process(es) he/she used during initial qualification at least once in each calendar quarter subsequent to the quarter in which he/she qualified and four times in each subsequent calendar year.

NOTE: THE VERIFICATION OF PROOF OF PROCESS WILL BE DONE BY THE DIVISION OFFICER, OR HIS/HER REPRESENTATIVE, AND DOCUMENTED.

4.3.5 Qualification Renewal. A brazer must renew his/her qualifications in accordance with reference (c).

4.3.6 Transfer of Qualification. Qualifications may be transferred from one activity to another when the requirements of reference (c) are met.

4.4 QUALIFICATION REQUIREMENTS FOR NAVY ENLISTED CLASSIFICATION CODE 4955 WELDERS.

4.4.1 Qualification Prerequisites.

4.4.1.1 Navy Enlisted Classification Code Achievement. To achieve a welding NEC the welder must successfully meet all the requirements of reference (a). Welders shall attend welding school except for aluminum welding and brazing. Training for welding aluminum and brazing is conducted at parent commands.

4.4.1.2 Specific Qualifications. Qualifications for specific additional welding processes, filler metal groups and welding positions may be obtained as defined in reference (a).

4.4.2 Maintenance of Qualification. A welder maintains his/her qualifications by using the process(es) he/she used during initial qualification at least once during each three month period or calendar quarter. In addition, for titanium welders and welding operators, verification of process used on titanium base metal during each 6-month or two consecutive calendar quarters shall also be maintained.

NOTE: THE VERIFICATION OF PROOF OF PROCESS WILL BE DONE BY THE DIVISION OFFICER, OR HIS/HER REPRESENTATIVE, AND DOCUMENTED. FINAL ACCEPTANCE OF CONTROLLED WELDING STILL REQUIRES NDT PERSONNEL, BUT THE PROOF OF PROCESS FOR MAINTENANCE OF QUALIFICATION MAY BE DONE BY THE DIVISION OFFICER OR HIS/HER REPRESENTATIVE.

4.4.3 Qualification Renewal. A welder must renew his/her qualifications in accordance with reference (b).

4.4.4 Transfer of Qualification. Qualifications may be transferred from one activity to another when the requirements of reference (b) are met.

4.4.5 Waiver of Qualification Tests. Qualification tests of welders working on assemblies as described in reference (b) may be omitted provided this omission is permitted by the applicable fabrication document or is approved.

4.5 NON-CODED HULL TECHNICIANS.

4.5.1 Authorization. Non-coded Hull Technicians are authorized to perform welding on a Minor Structure designated as Category F. Category F welds are repairs performed on "minor structure" assemblies, where the possibility of failure is remote, and failure would not result in danger to ship's personnel or the ship. Minimum qualifications are:

a. Be a qualified Hull Technician.

b. Be a qualified Maintenance Worker in accordance with reference (g).

c. Be a qualified Quality Assurance Craftsman in accordance with PQS 43523-B.

d. Have completed Job Qualification Requirements.

e. Have received documented training on the safety requirements associated with welding as outlined in reference (a).

f. Will be qualified in accordance with reference (b) for Category F welds, except for being assigned a welding code NEC, and will maintain proficiency in accordance with reference (b).

4.5.2 Minor Structure Components.

a. The following list identifies components which are considered "minor structure".

(1) Nonstructural joiner bulkheads/non-watertight bulkheads.

(2) Partitions, lockers and gratings.

(3) Non-ballistic wire way and ventilation trunks.

(4) Pipe Hanger Brackets not attached to hull and are non critical.

(5) Cableway Brackets not attached to hull and are non critical.

(6) Galley fixtures.

(7) Label plates, name plates.

(8) Furniture.

(9) Hand railings.

(10) Operating platforms.

(11) Hand-grabs and ladders.

(12) Weld fills for deck plates.

(13) Stuffing tubes above weather decks.

(14) Ventilation and air conditioning ducts.

(15) Protective covers for gear belts and chain drives.

(16) Vents, overflows and drains.

b. Some specific examples are:

(1) Welding corners on lockers and rack pans fabricated by the sheet metal shop.

(2) Fabricating and weld framing for non-watertight doors, false bulkheads and office desks.

(3) Fabrication of collars for gas cylinders.

(4) Fabrication and welding of pipe hangers, cable hangers and ventilation hangers for systems which have operating pressures less than 50 psi or temperatures less than 200 degrees F.

(5) Brazing of funnels for later installation in shipboard gravity drain systems.

4.6 QUALIFICATION REQUIREMENTS FOR NONDESTRUCTIVE TEST PERSONNEL.

4.6.1 Purpose.

a. To provide guidance on the procedures that must be followed to maintain NDT qualifications or attain NDT re-qualification in accordance with references (d) and (f).

b. Naval NDT personnel are qualified by being examined by a NDT Examiner in accordance with references (d) and (f).

4.6.2 Levels of Certification. NDT personnel are certified in accordance with references (d) or (f). Military personnel certified in accordance with reference (f) will be assigned NECs per reference (e).

a. Level I (NDT Operator): An individual certified to NDT level I is qualified to carry out NDT operations in accordance with written instructions and under the supervision of level II or level III personnel. The individual shall have the skills and knowledge to properly perform specific calibrations, specific tests, set up equipment, carry out specific inspections, record the results obtained, classify the results in accordance with written criteria and report the results. He/she shall not be responsible for the choice of the test method, technique to be used, or for the final assessment of the test results.

b. Level II (NDT Inspector): An individual certified to NDT level II is qualified to perform and direct non-destructive testing in accordance with established or recognized techniques. The individual shall be competent to choose the test techniques to be used; to set up and calibrate equipment; to interpret and evaluate results in accordance with applicable codes, standards and specifications; to carry out all duties for which a level I individual is qualified; to organize and report the results of non-destructive tests. The individual shall also be familiar with the scope and limitations of the methods for which he/she is qualified, and be able to exercise assigned responsibility for on-the-job training and guidance of trainees and level I personnel.

c. Level III (NDT Examiner): An individual certified to NDT level III shall be capable of assuming full responsibility for a test facility and staff; establishing techniques and procedures; interpreting codes, standards, specifications and procedures; and designating the particular test methods, techniques and procedures to be used. Shall develop NDT procedures in accordance with reference (d), adapted to the problems that are the subject of an NDT inspection; and to prepare written instructions. The individual shall have the competence to interpret and evaluate results in accordance with existing codes, standards and specifications; have a sufficient practical background in applicable materials, fabrication and product technology to select methods, establish techniques and to assist in establishing acceptance criteria where none are otherwise available; have general familiarity with other NDT methods and have the ability to train level I and level II personnel.

4.6.3 Certification of Nondestructive Test Personnel. Only those individuals who have successfully completed the Naval NDT of Metals course or commercial equivalent for civilian personnel can be certified by a NDT Examiner. NDT Inspectors will re-certify in accordance with reference (d) or (f).

4.6.4 Renewal of Certification. NDT Examiners will re-certify in accordance with reference (d) or (f).

4.6.5 Maintenance of Qualification.

a. NDT personnel will maintain qualification in accordance with reference (d).

b. NDT testing personnel must pass an annual vision test in accordance with reference (d).

4.6.6 Qualification Administration.

a. Command NDT Examiners shall be designated in writing.

b. Service Record Entries. Each NDT Inspector will have his/her service record updated to reflect current qualifications annually, as a minimum, and immediately prior to transfer. These periodic service record updates will be accomplished by entry on (NAVPERS 1070/613).

c. NDT Examiner/Division Officer, as appropriate, will maintain an individual NDT personnel record in accordance with reference (d) for each NDT Examiner and Inspector.

4.6.7 Approval of Nondestructive Testing Qualification Examinations. A NDT Examiner shall approve the NDT Inspector Qualification Examinations and visual test materials.

4.6.8 Transfer of Qualification. Qualifications being transferred from one naval facility to another must be evaluated to the satisfaction of the NDT Examiner of the new facility.

4.6.9 Nondestructive Testing Personnel Records. NDT Inspector/Operator records will be maintained by the NDT Examiner in accordance with references (d) and (h) and will consist of:

a. All qualification documentation shall be in accordance with references (d) and (h) (e.g., training and qualification documents).

b. Copy of current eye examination.

4.6.10 Nondestructive Testing Qualification Log. The NDT Supervisor will maintain an NDT personnel qualification log that will be used to record and maintain qualifications for each individual assigned. Each operator/inspector will have a separate section in the NDT qualification log that satisfies the requirements of paragraph 4.5.9 of this chapter. The NDT Supervisor or designated representative will update the NDT personnel qualification log. This will be based upon the completion of NDT performed as shown by completed NDT reports. This log may be maintained either as a hard copy or electronic copy.

4.6.11 Qualification of Generic Material Identity Testing Personnel. Personnel who perform generic materials identity testing will be qualified as required by local procedure which will include the following minimum requirements:

a. An eye examination satisfying the requirements of reference (a).

b. Training on the procedures of reference (i).

c. Training on the procedures for materials not in reference (i) used by the command.

d. Training on standard requirements.

e. Training on safety precautions associated with generic testing.

f. Training on reagent requirements and shelf life.

g. Testing requirements and designation of who performs the examinations.

h. Certification by the Quality Assurance Officer.

i. Re-qualification/qualification updating requirements.

j. For other than chemical testing programs, qualification will be in accordance with reference (j) or other applicable equipment technical manuals.

4.6.12 Qualification Administration. Command Generic Material Identity Examiners shall be designated in writing and approve Generic Material Identity Test Inspectors qualification examinations and test materials.

4.6.12.1 Transfer of Qualification. Generic Material Identity Testing Personnel. Since qualification is by local procedure, testing personnel must perform at a level of proficiency which is satisfactory to the Test Examiner at the new activity.

(This Page Intentionally Left Blank)

VOLUME V

PART I

CHAPTER 5

IN-PROCESS CONTROL

REFERENCES.

(a) NAVSEA S9510-AB-ATM-010/020 - Nuclear Powered Submarine Atmosphere Control Manual
(b) NAVSEA S9086-RJ-STM-010 - NSTM Chapter 504 (Pressure, Temperature and other Mechanical and Electromechanical Measuring Instruments)
(c) NAVSEA 389-0317 - Procedures for Maintenance and Repair of Naval Reactor Plants (Nuclear)
(d) NAVSEA 0989-LP-043-0000 - Commissioned Surface Ship General Reactor Plant Overhaul and Repair Specification
(e) NAVSEA 0989-LP-037-2000 - Commissioned Submarine General Reactor Plant Overhaul and Repair Specification
(f) NAVSEA S9505-AM-GYD-010 - Submarine Fastening Criteria (Non-Nuclear), Description, Design and Maintenance
(g) NAVSEA S9086-CJ-STM-010 - NSTM Chapter 075 (Threaded Fasteners)
(h) NAVSEA 0948-LP-045-7010 - Material Control Standard (Non-Nuclear)
(i) NAVSEA S9086-RK-STM-010 - NSTM Chapter 505 (Piping Systems)
(j) NAVSEA S9086-CM-STM-010 - NSTM Chapter 078 (Gaskets, Packing and Seals)
(k) MIL-STD-1330 - Standard Practice for Precision Cleaning and Testing of Shipboard Oxygen, Helium, Helium-Oxygen, Nitrogen and Hydrogen Systems
(l) NAVSEA S9086-T4-STM-010 - NSTM Chapter 589 (Cranes)
(m) NAVSEA MS 7650-081-091 - Submarine Hull Inspection
(n) NAVSEA MS 6310-081-015 - Submarine Preservation
(o) NAVSEA 0989-064-3000 - Cleanliness Requirements for Naval Nuclear Plant Maintenance by Forces Afloat
(p) NAVSEA 0989-LP-058-1000 - Destroyer Tender and Submarine Tender Nuclear Support Facilities Overhaul and Repair Specification
(q) MIL-STD-767 - Cleaning Requirements for Special Purpose Equipment, Including Piping Systems
(r) NAVSEAINST 9210.41 - All Naval Nuclear Propulsion Plants - Use of Standard Lubricants and Penetrating Fluid; Requirements for
(s) MIL-STD-413 - Visual Inspection Guide for Elastomeric O-Rings
(t) NAVSEA 0924-LP-062-0010 - Submarine Safety (SUBSAFE) Requirements Manual
(u) COMSUBLANTNOTE C3120 - Submarine Operating Restrictions and Depth Authorizations
(v) COMSUBPACNOTE C3120 - Submarine Operating Restrictions and Depth Authorizations
(w) NAVSEA T9044-AD-MAN-010 - Requirements Manual for Submarine Fly-By-Wire Ship Control Systems
(x) Fly-By-Wire Ship Control System Certification Boundary Book (ship specific)
(y) NAVSEAINST 4790.8 - Ship's Maintenance and Material Management (3-M) Manual
(z) NAVICPINST 4441.170 - COSAL Use and Maintenance Manual

LISTING OF APPENDICES.

A Determining Software Usability
B Format for Submarine Certification Continuity Report
C Format for Fleet Maintenance Activity Certification Report to Tended Submarine
D Format for Non-Fleet Maintenance Activity Certification Report to Tended Submarine
E Reactor Plant Configuration Change Report
F RPCCR Cover Letter for Nuclear Liaison Inquiries (Sample)
G RPCCR Cover Letter for SHIPALTS (Sample)

H Technical Manual Deficiency Report (TMDER)
I Fleet COSAL Feedback Report

5.1 PURPOSE. To provide the requirements or direct the user to the appropriate references to ensure that maintenance performed during the ship's life cycle (new construction through decommissioning) supports certification at all times. Sections 5.4 through 5.7 of this chapter provide explicit inspection and acceptance criteria. This guidance is adequate for all non-nuclear, non-Submarine Safety (SUBSAFE), non-Scope of Certification (SOC)/Deep Submergence Systems and Fly-By-Wire Ship Control Systems (FBW SCS) maintenance performed by forces afloat. All material used within any nuclear and non-nuclear submarine pressure hull shall be certified for use in accordance with reference (a).

5.2 TEST, MEASUREMENT AND DIAGNOSTIC EQUIPMENT.

5.2.1 General Requirements. Test, Measuring and Diagnostic Equipment (TMDE) for in-process work must be properly selected and used. TMDE requiring periodic calibration must be within its calibration periodicity when in use. All TMDE should be selected ensuring the equipment is of the proper range to perform the test, inspection or repair. The craftsman and Quality Assurance Inspector (QAI) should inspect all TMDE prior to use and reject questionable equipment. When inspections or measurements using TMDE are performed with the results documented on a Quality Assurance (QA) form, the type of equipment, range, serial numbers and calibration due dates for TMDE used will be recorded on the QA form as part of the Objective Quality Evidence (OQE).

5.2.2 Torque Wrenches.

a. Selection. Torque wrenches should be selected in such a manner that the required final torque falls within 20% to 90% of the torque wrench range. For example:

(1) A torque wrench with a scale range of 0-100 ft-lbs can be used for a maximum torque of 90 ft-lbs and a minimum torque of 20 ft-lbs.

(2) A torque wrench with a scale range of 50-250 ft-lbs can be used for a maximum torque of 225 ft-lbs and a minimum torque of 50 ft-lbs.

b. Calibration. Calibration should be verified to be within the required periodicity (based on due date on the calibration label) prior to use. Most Navy torque wrenches are calibrated for use in one direction only. These tools will have a label affixed stating, "Use Clockwise Only" or "Use Counterclockwise Only". The tool can be used only in the direction indicated. Torque tools calibrated for bi-directional use will bear a yellow "SPECIAL CALIBRATION" tag or label indicating that the tool was calibrated for use in both directions. Navy torque wrenches can be calibrated for bi-directional use only if specifically authorized by model number in the latest Naval Sea Systems Command (NAVSEA) OD 45845.

c. Micrometer adjustable torque wrenches. To ensure acceptable performance of micrometer adjusted torque wrenches, users must adhere to the following requirements:

(1) Exercise the wrench (apply pressure until snap mechanism activates) six times at approximately 60 percent of the rated maximum value before each use. This procedure minimizes the erratic readings often experienced with this type of wrench during the first few activations.

(2) Micrometer-type wrenches to be used in counterclockwise applications should be calibrated in the counterclockwise direction and marked as such.

(3) Some micrometer “click” type torque wrenches do not accommodate torque values down to 20 percent of the maximum rated capacity. Requests to use a specific torque wrench/meter, outside of the ranges specified above, require an engineering evaluation and written authorization from a technical warrant.

d. Extensions/Adapters. Torque wrenches are calibrated based on the specific length of the wrench as established by the wrench manufacturer. Use of an extension changes the effective length of the wrench. The actual torque being applied to the fastener will be different than that indicated on the wrench dial. Any time extensions are used, the following mathematical formulas should be used to determine the wrench dial reading required for the required applied torque:

NOTE: EXTENSIONS CAN SIGNIFICANTLY AFFECT THE APPLIED TORQUE TO INDICATED TORQUE RELATIONSHIP. ANY EXTENSION OTHER THAN A DIRECT ATTACHMENT (I.E., CROWSFOOT) MUST BE TAKEN INTO ACCOUNT.

$$Tind = \frac{Tact \ X \ L1}{L1 + L2}$$

Where:	Tact	=	Applied torque required
	Tind	=	Torque indicated on dial
	L1	=	Length of torque wrench
	L1 + L2	=	Length of torque wrench plus length of extension

When an adapter or extension is used on a torque wrench it increases the torque range of the wrench. The formula for computing torque when using an adapter or extension is explained in Figure 5-1 of this chapter.

Figure 5-1 Use of Torque Wrench Adapters

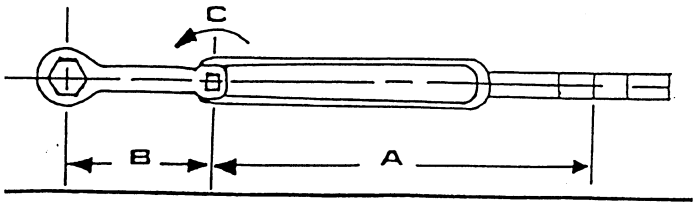

FORMULA FOR USING ADAPTERS

C = ACTUAL TORQUE APPLIED TO WRENCH
B = LENGTH OF ADAPTER
A = DISTANCE FROM DRIVE TO PULLER'S HANDGRIP
T = TORQUE REQUIRED FOR FASTENER

FORMULA: $C = \frac{A \times T}{A + B}$

PROBLEM: $\frac{28 \times 200}{28 + 9} = \frac{5600}{37}$ $C = 150$

ADAPTER REQUIRING REVERSE CORRECTION

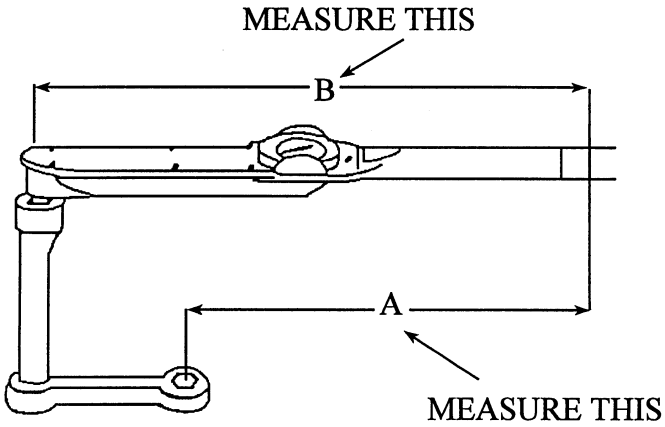

A = TOTAL LENGTH = 18" B = TORQUE WRENCH LENGTH = 24" C = CORRECTION FACTOR = A ÷ B = 18 ÷ 24 = 0.75

FORMULA FOR USE OF CORRECTION FACTOR

D = Required Torque Value C = Correction Factor

$D = \frac{200}{.75}$ $D = 266$

5.2.3 Gauges.

a. General. Gauges used for in-process functions, whether installed in the system or temporary, must be verified to be within calibration periodicity prior to use. Craftsmen should ensure the appropriate calibration information is recorded on the QA form.

b. Non-Nuclear Hydrostatic Testing. Master test gauges and backup gauges used for hydrostatic testing shall be selected and the calibration verified current in accordance with reference (b) and Volume IV, Chapter 9 of this manual.

5.3 TORQUE.

5.3.1 General Requirements. Care must be used when torquing fasteners or plugs. Special attention is required to select the proper torque specification for a given application/specification as it is specifically selected to reduce the tendency for the fastener to loosen in service and to improve the fastener fatigue life. Torque requirements found in drawings, Maintenance Standards (MS) or technical manuals, etc. will be used in preference to general guides for torquing. If no specific torque requirement exists, references (c), (d), (e), (f) or reference (g) may be used as guidance but ensure that the information applies exactly to the system and fastener type being torqued.

5.4 THREADED FASTENERS.

5.4.1 Fundamentals. The term "threaded fasteners" includes bolts, studs or stud-bolts, bolt-studs, and nuts. The type of fastener used in an application is determined by the equipment designer and is found in the parts lists, drawings, and/or equipment manual. Information on fastener design and selection can be found in references (g) and (h).

5.4.2 Torquing Threaded Fasteners. Torquing a threaded fastener means turning a nut on a bolt or stud or turning a capscrew in a tapped hole until you achieve the required clamping force or pre-load. Installation specifications usually call for a particular torque for each fastener or group of fasteners. The order in which each fastener is tightened may also be specified. Fastener tightening procedures developed by the shipbuilder or the equipment manufacturer should be provided for all critical systems or joints (i.e. main and auxiliary steam, hydraulic, high pressure air and other gases, high pressure feed, condensate and drain, diesel engine hold-down bolts, main bearing cap bolts). In other words, fastener torque or tightening procedures should be provided for any pressure containing system where release of the entrapped fluid or gas will have a detrimental effect on safety of personnel or the ability of the ship to accomplish its mission or any bolted flange or joint whose failure might cause injury to ship's personnel or damage to equipment thus preventing or reducing the ability of the ship to accomplish its mission. Where tightening instructions are not provided, general recommended torque values and the tightening procedures are available in reference (g), for submarines these values are found in reference (f), nuclear related procedures may be found in references (c), (d), and (e).

5.4.2.1 Torquing Methods. To ensure that the required tension is actually produced in a bolt or stud when the joint is assembled requires a tightening method that either directly or indirectly measures or determines the amount of tension. The most common and practical method is direct torque measurement. A detailed discussion on these tightening methods is available in reference (f):

a. Torque measurement.

b. Angular turn-of-the-nut.

c. Feel.

5.4.3 Threaded Fastener Inspections. Fastener Inspections are crucial because under perfect conditions, the majority of the applied torque is to overcome frictional forces vice stretching the fastener to the desired pre-load. Fastener defects contribute to the cumulative frictional forces thus decreasing actual applied torque.

WARNING: ENSURE FASTENERS ARE OF PROPER MATERIAL FOR THE APPLICATION. BLACK OXIDE COATED BRASS CAN BE, AND HAS BEEN, MISTAKEN FOR STEEL, AND HAS RESULTED IN DAMAGED EQUIPMENT, SIGNIFICANT INJURY TO PERSONNEL, AND DEATH.

a. Fastener inspection definitions:

(1) Minor Defect. A single nick, gouge or flattened thread (after removal of sharp edges and raised metal) that has a depth greater than 1/64 inch but less than 1/2 the thread height (depth) and a width less that the thread spacing. Defects less than 1/64 inch may be ignored.

(2) Major Defect. A single defect (after removal of sharp edges and raised metal) that has a depth of over 1/2 the thread depth.

b. General fastener acceptance criteria. Prior to reinstallation:

(1) Ensure thread surfaces are clean and free of dirt, scale, rust, etc.

(2) Inspect fastener for cracks. Cracks are not acceptable.

(3) Inspect fastener threads. Broken, chipped, or missing threads, or other indications of brittle material failure, are not acceptable.

(4) Galling is not acceptable.

(5) Isolated minor defects are acceptable.

(6) Ensure the drive end of the fastener is not damaged to the point proper tightening cannot be achieved.

c. Additional submarine fastener acceptance criteria. In addition to criteria of paragraph 5.4.3.b of this chapter:

(1) An isolated Minor Defect that exceeds the width criteria is acceptable when the total length of the defect does not exceed 15% of one thread length in any one complete thread.

(2) Any combination of Minor Defects is acceptable when the total combined length of the defects do not exceed 15 percent of one thread length in any one complete thread.

5.4.4 Special Instructions for Self-Locking Nuts. A visual inspection of the insert and the mating threads must be conducted prior to reuse. Replace self-locking nuts that have looseness in the plastic (nylon) insert ring element or cracks in the element or metal surrounding the element. If the nut can be installed to the point where the bolt threads pass the insert without a wrench, discard the nut. If the adequacy of the self-locking element is in doubt, the final minimum breakaway torque must meet the requirement of references (f) or (g).

5.4.4.1 Running Torque. For self-locking fasteners which are less than or equal to 5/8" in size, running torque must be determined and added to the required joint torque. For self-locking fasteners which are less than or equal to 5/8" in size, the average running torque for all fasteners for the joint shall be specified on the QA form 34. Running torque for self-locking fasteners that are greater than 5/8" is not required to be determined or added to the required joint torque. Running torque for non-self-locking fasteners is not required to be determined or added to the required joint torque.

5.4.5 Replacement Fastener Selection. For steam and feedwater system, flange fastener material shall be chosen using the following order of preference:

a. Ships drawings.

b. MIL-STD-777 for surface ships.

c. MIL-STD-438 for submarines.

d. Reference (g) of this chapter.

e. Equipment manuals.

f. SAE J2280.

5.4.6 Tightening Sequence. If more than one fastener is used in a joint, determine the proper tightening sequence for each fastener. More than one piece of expensive equipment has been cracked or warped because the mechanic failed to follow this rule. Installation specifications should specify the tightening sequence for each assembly using two or more fasteners. If the sequence is not specified, follow the applicable guide shown in Figure 5-2 below.

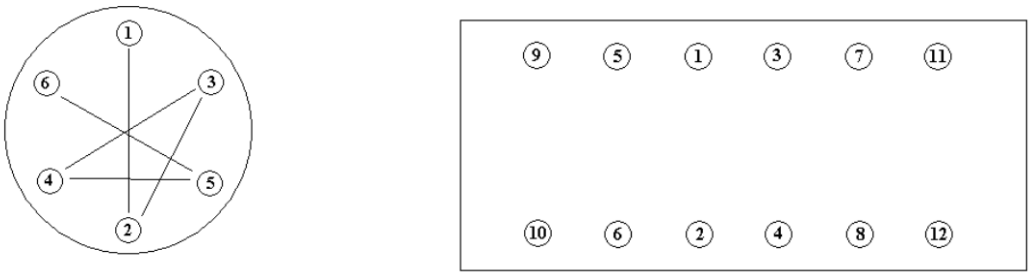

Figure 5-2 Fastener Tightening Sequence

5.4.7 Thread Lubricants. Failure to use an approved proper thread lubricant on a fastener may result in not applying the correct pre-load on the fastener and the joint may leak or the fasteners may fail. The information in Table 5-1 of this chapter is intended for use where lubricant information is not provided in: (1) MS or (2) Maintenance Requirement Card (MRC). Caution should be used if attempting to use lubricants from drawings or component technical manuals as many lubricants listed there are no longer preferred or permitted. Stock numbers for approved lubricants are found in reference (g).

CAUTION: FOR SYSTEMS IN NUCLEAR PROPULSION PLANTS, EXCEPT HIGH PRESSURE AIR SYSTEMS, ONLY MOLYBDENUM DISULFIDE IN ISOPROPANOL PER MIL-L-24478, ANTI-GALLING COMPOUND PER CID A-A-59004 AND GRAPHITE IN ISOPROPANOL PER MIL-L-24131 (MILITARY SYMBOL CGI) ARE TO BE USED UNLESS SPECIFICALLY IDENTIFIED IN APPLICABLE TECHNICAL DOCUMENTATION.

NOTE: THE INFORMATION IN THIS TABLE IS ADEQUATE FOR ALL NON-NUCLEAR AND NON-SUBSAFE MAINTENANCE PERFORMED BY FORCES AFLOAT.

Table 5-1 Fastener Thread Lubricants

Service	Lubricant (Common Name)	Mil-Spec Information	Notes
HP Air, Service Air, Oxygen, Nitrogen, and other gas systems	Fluorinated Grease (Grease, Aircraft and Instrument, Fuel & Oxidizer resistant)	MIL-PRF-27617, Type III	
Service above 300°F but less than 1000 °F and for fasteners requiring periodic removal	Anti-galling Compound, Thread lubricating, seizing resistant, and Calcium Hydroxide containing Molykote P-37 Paste.	CID-A-A-59004	(2), (4) & (5)
Service above 1000 °F	High Temperature Anti-Seize (Copper Based - Fel-Pro C5-A) (Nickel Based - Never-seez)	MIL-A-907	(4) & (6)
Services 300°F and less, except gas and hydraulic systems	Anti-galling Compound, Thread lubricating, seizing resistant, and Calcium Hydroxide containing Molykote P-37 Paste.	CID-A-A-59004	(3)
Thread lubricant to reduce galling and friction.	Anti-galling Compound, Thread lubricating, seizing resistant, and Calcium Hydroxide containing Molykote P-37 Paste.	CID-A-A-59004	(2)
Threaded aluminum parts engaged with similar or dissimilar metals	Zinc dust-petrolatum anti-seize	CID-A-A-59313	
Submarine Hydraulic System unions	Anti-galling Compound, Thread lubricating, seizing resistant, and Calcium Hydroxide containing Molykote P-37 Paste.	CID-A-A-59004	(3) & (4)
Hydraulic systems in contact with system fluid	System Fluid (2190TEP, 2075TH, etc.)	As applicable	(1)
Hydraulic system fasteners	Anti-galling Compound, Thread lubricating, seizing resistant, and Calcium Hydroxide containing Molykote P-37 Paste.	CID-A-A-59004	
	System fluid	As applicable	(1)
Diving compressed air system piping joints	Silicone grease	SAE-AS-8660	
	Molykote Z Powder	SAE-AMS-M-7866	

Service	Lubricant (Common Name)	Mil-Spec Information	Notes
Mixed gas diving systems	Silicone grease	SAE-AS-8660	
	Fluorinated Grease	SAE-AMS-M-7866	
Areas where fastener will be immersed in water or regularly wetted or splashed.	Anti-galling Compound, Thread lubricating, seizing resistant, and Calcium Hydroxide containing Molykote P-37 Paste.	CID-A-A-59004	
Monel and K-monel	Anti-galling Compound, Thread lubricating, seizing resistant, and Calcium Hydroxide containing Molykote P-37 Paste.	CID-A-A-59004	(5)

Notes:

(1) Threads that may contact system fluid or internals require different lubricants than threads that are completely external to the internals of the piping or component. The distinction is made in table 5-1 of this chapter. For hydraulic systems, piping union threads may be considered to be not in contact with system fluid but that hydraulic system union O-Rings must be lubricated with system fluid to prevent the potential for contamination of piping internals.

(2) Should not be used above 1000°F on low-alloy and carbon steels or above 670°F in all other applications.

(3) Thread lubricants containing molybdenum disulfide shall not be used in areas where the fastener will be immersed in the seawater or regularly wetted or splashed with seawater. Bacteria in the seawater cause the molybdenum disulfide to break down to form compounds (especially sulfur) which attack the fastener.

(4) High Temperature Anti-Seize (Copper Based - Fel-Pro C5-A or Nickel Based - Never-seez) may be used if CID-A-A-59004 is not available. But it will not be used with stainless steels above 250°F. When ordering MIL-A-907 lubricant, further specify Fel-Pro C5-A when applicable.

(5) Not to be used in air systems.

(6) Do not use with stainless steels above 250°F.

5.4.8 Replacement of Fasteners Without Disturbing Joint Integrity. Should it be necessary to rework or replace flange joint fasteners (including studs) in piping systems after completion of the hydrostatic test, such rework and/or replacement may be carried out without disturbing joint integrity. No more than one fastener may be removed at any one time so the joint integrity will remain intact and further hydrostatic testing will not be required. The level of work and material controls will dictate the type of Technical Work Document to be used to document fastener replacement as defined in Part I, Chapter 2, section 2.2 of this volume.

5.4.9 Safety Wiring Using Lockwire/Locking Cable. The main purpose of safety wiring is to prevent complete loss of a fastener. It can also indicate whether the fastener has been tampered with. However, it is not effective in preventing minor nut/bolt rotation, so it does not prevent preload loss. There are two approved methods for safety wiring fasteners: lockwiring (often called safety wiring) and lock cabling (also called safety cabling). While most drawings and maintenance procedures call for lockwiring, NAVSEA has authorized locking cable as equal to, and an acceptable replacement for lockwire.

a. Lockwire. Lockwire (also called safety wire) is installed by passing single strand flexible wire through the drilled holes of adjacent bolt or capscrew heads, or through the slots of castellated nuts for studs. Lockwire must be installed using the methods and patterns in reference (g).

b. Locking Cable. The locking cable (also called safety cable) method uses a very small stainless steel cable with an end cap on one end. The cable is passed through two or more fasteners, drawn tight, and a ferrule applied to the free end. The cable is installed in such a way that it tightens as the fastener loosens, preventing the fastener from turning. Using locking cable significantly simplifies and speeds safety wire installation. Locking cable must be installed using the methods in reference (g).

5.5 FLANGED JOINTS.

5.5.1 General. Flanges are installed in piping systems to ease removal and re-installation of piping and equipment. Flange requirements are specified in MIL-STD-777, Schedule of Piping, Valves, Fittings and Associated Piping Components for Naval Surface Ships and MIL-STD-438, Schedule of Piping, Valves, Fittings and Associated Piping Components for Submarine Service. Flanges are typically joined to pipe and tube by welding or brazing. Detailed joining procedures are covered in MIL-STD-22.

5.5.2 General Flange Designs. Four flange designs are used in Navy piping systems:

NOTE: A THOROUGH REVIEW OF FLANGE TYPES TO BE WORKED MUST BE UNDERTAKEN DURING THE JOB PLANNNING PROCESS TO ENSURE THAT THE CORRECT FLANGE TYPE IS IDENTIFIED. THE RAISED AREA ON A RAISED FACE FLANGE IN NON-STEAM SYSTEMS MAY BE AS THIN AS 0.010". FAILURE TO VERIFY THE FLANGE TYPE MAY RESULT IN APPLYING EXCESSIVE TORQUE AND DISTORTING THE FLANGE BOLTING RING AND PREVENTING A PROPER SEAL.

a. Flat-face flanges. Flanges commonly used in low-pressure, low temperature applications. They are usually made from non-ferrous materials and employ sheet type gaskets (see Figure 5-3 below).

Figure 5-3 Typical Flat Face Flange

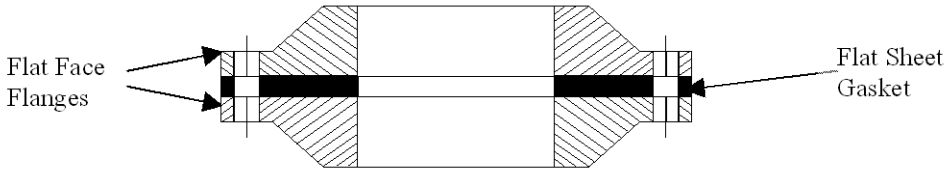

b. Raised face flanges. Flanges commonly used in high-pressure, high temperature applications. A raised face flange is illustrated below. They are usually made from ferrous materials and employ spiral wound gaskets. Flat face non-ferrous flanges shall not be mated with raised-face steel flanges (see Figure 5-4 below).

Figure 5-4 Typical Raised Face Flange

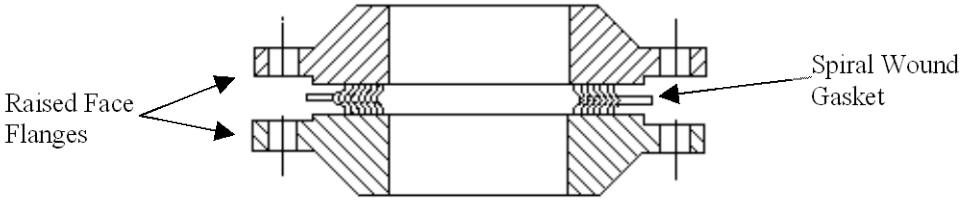

c. Hydraulic flanges. The flanges are used almost exclusively in submarine hydraulic systems. A hydraulic flange assembly is illustrated below. The pilot design prevents the O-Ring from being extruded when loads applied to the assembly cause flange separation (see Figure 5-5 below).

Figure 5-5 Typical Hydraulic Flange

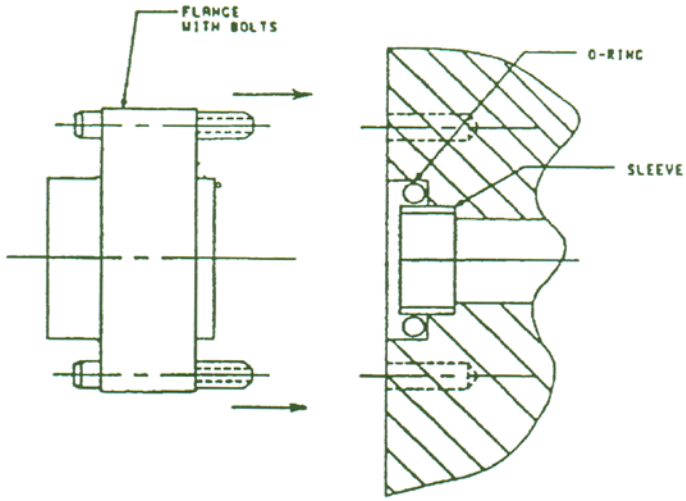

d. Bulkhead/deck penetration flanges. Flanges are used where piping passes through decks or watertight bulkheads. Their main purpose is to prevent flooding of adjacent spaces by sealing the hole cut in the bulkhead or deck for the piping to pass through. There are many types currently in use. Rigid type penetrations are shown on NAVSEA drawing 803-1385866 and 803-1385899. When used in high-temperature systems, insulating washers and ferrules are used on the flange fasteners to prevent the bulkhead from becoming hot and to prevent the piping system fluid from being cooled.

5.5.2.1 Submarine Flanged Joint Designs. The primary joint configurations used in submarine piping systems are raised face to raised face, flat face to flat face, raised face to flat face, and hydraulic MS fittings.

NOTE: A THOROUGH REVIEW OF FLANGE TYPES TO BE WORKED MUST BE UNDERTAKEN DURING THE JOB PLANNNING PROCESS TO ENSURE THAT THE CORRECT FLANGE TYPE IS IDENTIFIED. THE RAISED AREA ON A RAISED FACE FLANGE IN NON-STEAM SYSTEMS MAY BE AS THIN AS 0.010". FAILURE TO VERIFY THE FLANGE TYPE MAY RESULT IN APPLYING EXCESSIVE TORQUE AND DISTORTING THE FLANGE BOLTING RING AND PREVENTING A PROPER SEAL.

a. Flat faced flange configuration. Flat face to flat face flanges are most commonly used on hull-mounted components and the flat face to raised face flanges (NAVSEA 803-1385861) are usually used in line joints. Flanges in seawater line joints and hull mounted flanges use O-Ring seals.

b. Raised face flange configuration. On raised face flanges, the face of the flange is raised slightly on the inner diameter of the flange extending out, in some cases, to the inner edge of the bolt holes. Normally, a raised face flange is used against a flat face flange. Raised face flanges allow for higher gasket contact pressure for the same bolt stresses as compared to flat face flanges, but result in higher flange stresses. The illustration below shows a typical seawater line joint with a slightly raised face and in this application with an O-Ring seal (see Figure 5-6 below).

Figure 5-6 Typical Sea Water System Joint Flange

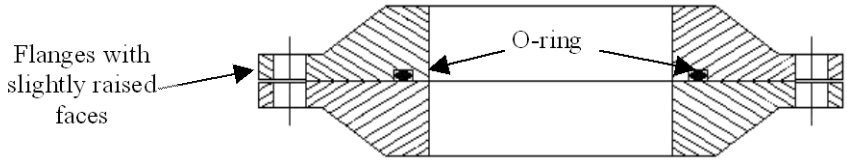

5.5.3 Flange Face Surface Finish Requirements and Acceptance Criteria. The surface finish depends on the type of seal used in the joint. Three types of seals are commonly employed: flat gaskets, spiral wound gaskets, or O-Ring seals. Surface finishes are usually expressed by a Roughness Average (R_a). The flange acceptance criteria are provided below. The applicable MS should be consulted, if available, to ensure specific requirements are met.

a. General flange information.

(1) The size of surface defects may be estimated visually.

(2) Surface finish requirements apply only to surfaces surrounding the defects and not to the surface defects themselves.

(3) Lay is defined as the direction of the predominant surface pattern caused by the machining operation.

NOTE: IN FIGURE 5-7 OF THIS CHAPTER, "D" IS THE DISTANCE FROM THE INNER EDGE OF GASKET TO INNER EDGE OF CLOSEST GASKET HOLE, OR THE DISTANCE FROM INNER EDGE OF GASKET TO CLOSEST OUTSIDE EDGE OF GASKET, WHICHEVER IS LESS. FOR GASKETS WITHOUT BOLT HOLES, "D" IS THE DISTANCE FROM THE INNER EDGE OF GASKET TO CLOSEST EDGE OF GASKET.

b. Acceptance criteria for flange sealing surfaces machined with a straight lay.

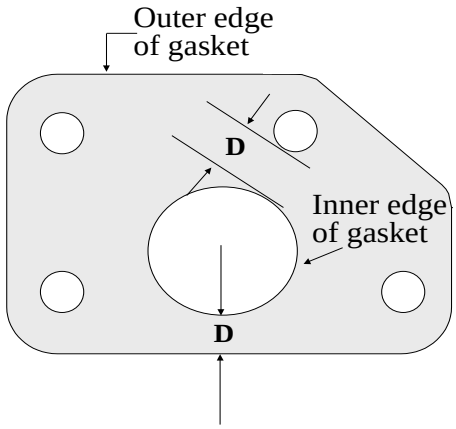

Figure 5-7 Typical Flange Gasket

(1) Any surface defect or series of surface defects which, if connected, would form a leakage path to any gasket bolt hole or any outer gasket edge is acceptable provided normal gasket contact greater than one-half of "D" exists along that path. (see Figure 5-7 of this chapter)

(2) Raised or sharp edges of acceptable surface defects on gasket contact surfaces are not acceptable.

(3) Gasket contact surfaces mating with metallic, metal jacketed, spiral wound, metal graphite, and spiral-wound metal-asbestos gaskets must have a finish of 125 R_a or smoother.

(4) Gasket contact surface mating with flat gaskets must have a finish of 500 R_a or smoother.

(5) Flange faces should be flat as verified using a straight edge and feelers. Gaps of more than 0.003 of an inch require repair.

(6) When defects exceed the acceptance criteria, the following action should be taken:

(a) If accessible, machine the flange to meet the acceptance criteria.

(b) If inaccessible for machining, handwork the flange to meet the acceptance criteria.

c. Acceptance criteria for flange sealing surfaces machined with concentric or phonographic lay shall be in accordance with reference (i).

d. Acceptance criteria for flanges with O-Ring sealing surfaces.

(1) Surface finish of the O-Ring sealing surfaces shall be as specified by applicable drawings, but a finish of 63 R_a in the O-Ring groove and on the mating surface areas shall not be exceeded.

(2) Some minor surface defects are allowable depending on the O-Ring size. The maximum allowable surface defects are per Table 5-9 of this chapter.

(3) Raised or sharp edges of allowable surface defects on the O-Ring groove and mating sealing surface are not acceptable.

5.5.4 Flanged Joint Makeup.

5.5.4.1 Flanged Joint Spiral Wound Gasket Installation.

a. Ensure fasteners and flange raised faces are free of burrs, nicks, dirt, and corrosion and meet the applicable acceptance criteria. Ensure that the proper gasket has been selected, that it is undamaged, and that the gasket rotates freely within the metal outer ring.

b. Lubricate fastener threads and nut bearing surfaces using a lubricant permitted by the MS or MRC. In the absence of a specified lubricant, select an approved thread lubricant from Table 5-1 of this chapter.

c. Verify flange faces are parallel by measuring the gap at a minimum of four points, at least 90 degrees apart, and ensure the flanges are parallel within the tolerances shown in Table 5-3 of this chapter.

d. Position the gasket in the joint and assemble the nuts and bolts hand tight.

e. Ensure the flange face and bolt holes are aligned. Alignment is correct when the fasteners can be pushed through by hand. If alignment is off, check the piping run for constraints such as hangers that need loosening, piping contacts surrounding structure, etc. When restraints are removed, moderate external force may be applied to align the flanges.

f. Make up the joint using the Metal-to-Metal method or Controlled Gap method as applicable:

(1) Metal-To-Metal Method.

(a) Tighten fasteners evenly in a star or cross pattern until the flanges are in contact with the gasket outer ring. This would normally be accompanied by a noticeable increase in torque when metal-to-metal contact is made. After 2 to 3 passes, inspect the gap frequently to ensure the flanges are kept parallel to the maximum extent practicable.

(b) Do not continue tightening after metal-to-metal contact is made, since excessive torque may distort the flanges or overstress the bolt. In addition, where special torque requirements are specified by the detailed drawing, these requirements should also be met.

(c) Check all fasteners in the joint to ensure that no fasteners are loose following completion of joint pull-up.

NOTE: USE OF A TORQUE WRENCH ON THESE JOINTS IS NOT MANDATORY UNLESS THE DRAWING LISTS A SPECIFIC TORQUE FOR A JOINT. INSTEAD, GOOD SHOP PRACTICES AND THE APPROPRIATE BOX END/COMBINATION WRENCHES MAY BE USED.

(2) Controlled Gap Method.

CAUTION: TO AVOID FLANGE DISTORTION DO NOT CONTACT THE RAISED FACES OF BOTH FLANGES WITH THE GASKET OUTER RING AT ANY SINGLE POINT. MAINTAIN EVEN CONTACT AROUND FLANGE FACES TO THE MAXIMUM EXTENT TO AVOID THE EFFECTS OF PRYING LOADS DUE TO PREMATURE PULL-UP OF FASTENERS ON ONE SIDE.

(a) Tighten fasteners incrementally in a star or cross pattern while maintaining the raised faces parallel. Torque the bolts to the values specified by the detailed drawing. If the detailed drawing does not specify torque, torque to the values in Table 5.2 of this chapter. Obtain a total gap of between zero (metal-to-metal) and 0.010" between the flange raised faces and the gasket metal outer ring. The gap is to be measured at four points 90 degrees apart with feeler gages. In addition, to ensure parallelism, the total gap measurements should be even within 0.005". (see Table 5-3 of this chapter)

(b) Check all fasteners in the joint to ensure that no fasteners are loose following completion of joint pull-up. After final tightening of fasteners, check passes should be made in either a clockwise or counter clockwise direction (technician's choice), rather than in the normal tightening pattern. This reduces the chances of skipping a fastener and results in higher initial pre-load and reduced pre-load variation.

g. Verify thread protrusion as satisfactory. Thread protrusion is the number of threads protruding above the nut. Minimum thread protrusion is one thread on non-self-locking fasteners or flush for self-locking fasteners. Maximum thread protrusion is ten threads unless authorized by drawing or technical manual.

Table 5-2 Torque Values for Steel Flanges with Spiral Wound Gaskets

Controlled Gap Torque Values (Steel Fasteners, B7 or B16 per ASTM A 193) *	
Bolt Size (Inch)	Maximum Torque (ft-lbs)
1/2	30-45
5/8	60-105
3/4	100-165
7/8	160-260
1	250-390
1-1/8	375-550
1-1/4	550-900
* - Table based on use of thread lubricant such as FEL-PRO C5-A	

Figure 5-8 Flanged Joint Gap Measurements

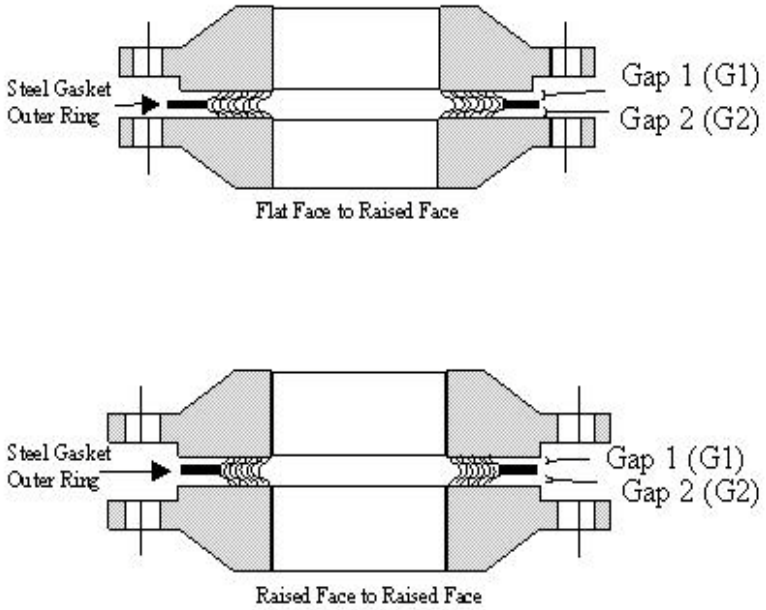

Notes:

(1) The sum of gaps G1 and G2 is to range from 0.000 to 0.010".

(2) The above conditions must be met at 4 points that are 90 degrees apart and be within parallelism of 0.005".

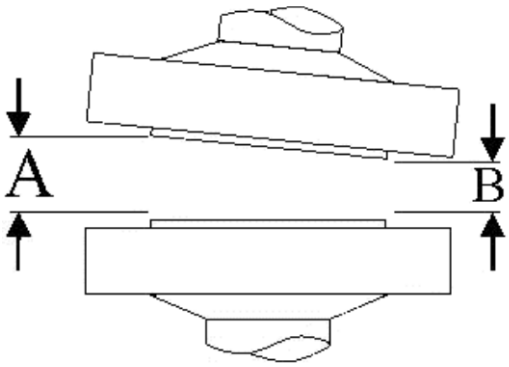

Table 5-3 Flange Alignment and Parallelism Tolerances

Pipe Size In Inches	Flange OD In Inches	Maximum Allowable Difference (inches) At Outside Diameter of Seating Surface (A-B)	
		* Raised Face Flanges	**Flat Face Flanges
1/2	3 9/16	0.030	0.067
1/2	3-3/4	0.030	0.067
3/4	3-13/16	0.030	0.062
3/4	4-5/8	0.035	0.072
1	4-1/4	0.035	0.066
1	4-7/8	0.035	0.066
1-1/4	4-1/2	0.035	0.063
1-1/4	5-1/4	0.040	0.072
1-1/2	5-1/16	0.040	0.065
1-1/2	6-1/8	0.045	0.073
2	5-9/16	0.040	0.065
2	6-1/2	0.045	0.073
2-1/2	6-1/8	0.045	0.070
2-1/2	7-1/2	0.050	0.078
3	7-7/16	0.050	0.082
3	8-1/4	0.055	0.091
3-1/2	8	0.055	0.088
3-1/2	9	0.060	0.096
4	(NAVSEA) 8-11/16	0.060	0.095
4	(USA) 10	0.065	0.102

Pipe Size In Inches	Flange OD In Inches	Maximum Allowable Difference (inches) At Outside Diameter of Seating Surface (A-B)	
		* Raised Face Flanges	**Flat Face Flanges
5	(NAVSEA) 9-3/4	0.065	0.097
5	(USA)11	0.065	0.097
6	(NAVSEA)10-7/8	0.065	0.094
6	(USA)12-1/2	0.070	0.101
8	(NAVSEA)13-1/8	0.070	0.098
8	(USA)15	0.075	0.105
10	(NAVSEA)15-3/4	0.075	0.104
10	(USA)17-1/2	0.080	0.111
12	(NAVSEA)18-1/8	0.090	0.121
12	(USA)20 1/2	0.095	0.127
14	(NAVSEA)19-1/4	0.095	0.126
14	(USA)23	0.095	0.126
Over 14	Over 23	0.095	0.126

* - For raised face to raised face and raised face to flat face.

** - For flat face to flat face.

5.5.4.2 Flanged Joint Flat Gasket Installation.

a. Ensure fasteners and flange raised faces are free of burrs, nicks, dirt, and corrosion and meet the applicable acceptance criteria. Ensure that the proper gasket has been selected and that it is undamaged.

b. Lubricate fastener threads and nut bearing surfaces using a lubricant permitted by the technical manual, drawing, or MS. In the absence of a specified lubricant, select a suitable lubricant from the chart provided in Table 5-1 of this chapter.

c. Verify flange faces are as close together as possible and parallel by measuring the gap at a minimum of four points, at least 90 degrees apart, and ensure the flanges are parallel within the tolerances shown in Table 5-3 of this chapter.

d. Ensure the flange face and bolt holes are aligned. Alignment is correct when the fasteners can be pushed through by hand. If alignment is off, check the piping run for constraints such as hangers that need loosening, piping contacts surrounding structure, etc. When restraints are removed, external force can be used to align the flanges. External force is any means of cold pulling pipe into alignment using chainfalls, prybars, wedges, alignment pins, temporary long fasteners, etc. External force can only be used on piping that has not been modified during the availability (i.e., existing piping) and when the component being installed meets drawing end-to-end dimensions.

e. Position the gasket in the joint and assemble the fasteners hand tight.

f. Make up the joint using the Compressible or Incompressible procedure as applicable.

(1) Compressible gasket procedure. Tighten fasteners evenly in a star or cross pattern until the pre-load requirements of ships drawings, equipment manuals or reference (j) if available. If a pre-load value is not available tighten the fasteners until the gasket is compressed between 20-30 percent of its original thickness. Do not exceed 30 percent compression. To the maximum extent possible, maintain flanges parallel during the tightening sequence.

(2) Incompressible gasket procedure.

(a) Tighten fasteners evenly and incrementally until each the flanges are in contact with the gasket. This is normally indicated by a noticeable increase in torque when gasket-to-flange contact is made. Do not excessively tighten after gasket-to-flange contact is made since excessive torque may distort the flanges. Tighten the fasteners until the specified torque of the technical reference is achieved and/or the gap measurements of the clearance between the flanges indicate the flanges are parallel.

(b) The gap is to be measured at four points 90 degrees apart with feeler gages. In addition, to ensure parallelism, the total gap measurements should be even within 0.005 inches.

g. Verify thread protrusion as satisfactory. Thread protrusion is the number of threads protruding above the nut. Minimum thread protrusion is one thread on non-self-locking fasteners or flush for self-locking fasteners. Maximum thread protrusion is ten threads unless authorized by drawing or technical manual.

5.5.4.3 Flanged Joint O-Ring Installation.

a. Ensure fasteners and flange raised faces are free of burrs, nicks, dirt, and corrosion and meet the applicable acceptance criteria. Ensure that the proper gasket has been selected and that it is undamaged.

b. Lubricate fastener threads and nut bearing surfaces using a lubricant permitted by the technical manual, drawing, or MS. In the absence of a specified lubricant select a suitable lubricant from the chart provided in Table 5-1 of this chapter.

c. Verify flange faces are as close together as possible and parallel by measuring the gap at a minimum of four points, at least 90 degrees apart, and ensure the flanges are parallel within the tolerances shown in Table 5-3 of this chapter.

d. Ensure the flange face and bolt holes are aligned. Alignment is correct when the fasteners can be pushed through by hand. If alignment is off, check the piping run for constraints such as hangers that need loosening, piping contacts surrounding structure, etc. When restraints are removed, external force can be used to align the flanges. External force is any means of cold pulling pipe into alignment using prybars, wedges, alignment pins, temporary long fasteners, etc. External force can only be used on piping that has not been modified during the availability (i.e., existing piping) and when the component being installed meets drawing end-to-end dimensions.

e. Lubricate the gasket/O-Ring with the lubricant authorized by the MS, MRC, or select a lubricant from table 5-4 of this chapter, suitable for the application. The O-Ring lubricant may be different from the fastener thread lubricant.

CAUTION: FOR SYSTEMS IN NUCLEAR PROPULSION PLANTS, USE THE O-RING LUBRICANT SPECIFIED IN THE APPLICABLE TECHNICAL REFERENCE.

Table 5-4 O-Ring Lubricants

Type of System	Lubricant
Petroleum System	System Fluid or DOD-G-24508 Grease
Hydraulic System (Phosphate Ester Based)	MIL-PRF-27617 Type III Fluorinated Grease
High Pressure Air, Oxygen, and Nitrogen	MIL-PRF-27617 Type III Fluorinated Grease
Pneumatic (Low Pressure, 200 psi maximum)	SAE-AS-8660 Silicone
Seawater	Termalene Grease CID A-A-50433 Notes (1), (2), (3)
Vacuum	SAE-AS-8660 Silicone
Electrical Connectors	SAE-AS-8660 Silicone
Freshwater Systems	SAE-AMS-G-6032 Grease
Life Support Systems	MIL-PRF-27617 Type III Fluorinated Grease

Notes (1) Consult Naval Ships' Technical Manual (NSTM) Chapter 78 Table 3-16 for recommended lubricants in applications not listed in Table 5-4 of this chapter.

(2) Silicon compound per SAE-AS-8660 is also an acceptable lubricant for seawater systems.

(3) Termolene grease is not approved for use in Divers Life Support Systems and shall not be used within any manned area of a Dry Deck Shelter.

f. Position the O-Ring in the joint and assemble the fasteners hand tight.

WARNING: A JOINT IS CONSIDERED TO BE A RAISED FACE DESIGN IF EITHER FLANGE HAS A RAISED FACE. THE TORQUE REQUIREMENTS DIFFER SIGNIFICANTLY FOR RAISED FACE AND FLAT FACE FLANGES. CAUTION MUST BE EXERCISED IN SELECTING APPROPRIATE TORQUE. FAILURE TO DO SO MAY RESULT IN APPLYING EXCESSIVE TORQUE AND DISTORTING THE FLANGE AND PREVENTING A PROPER SEAL.

g. Tighten fasteners evenly and incrementally until each of the flanges are in contact with each other. This is normally indicated by a noticeable increase in torque when flange-to-flange contact is made. Do not excessively tighten after contact is made since excessive torque may distort the flanges. Tighten the fasteners until the specified torque of the technical reference is achieved.

h. Verify thread protrusion as satisfactory. Thread protrusion is the number of threads protruding above the nut. Minimum thread protrusion is one thread on non-self-locking fasteners or flush for self-locking fasteners. Maximum thread protrusion is ten threads unless authorized by drawing or technical manual.

5.5.5 Piping System O-Ring Unions.

a. General. This section applies to piping system O-Ring union joint assemblies and inspection criteria. The application of O-Ring union guidance is dependent on the service application. Other than items specifically referring to O-Rings, the guidance is also generally applicable to non O-Ring unions. A typical O-Ring union joint is shown in Figure 5-9 of this chapter. O-Ring unions are often referred to as "MS" fittings.

Figure 5-9 Piping System O-Ring Union

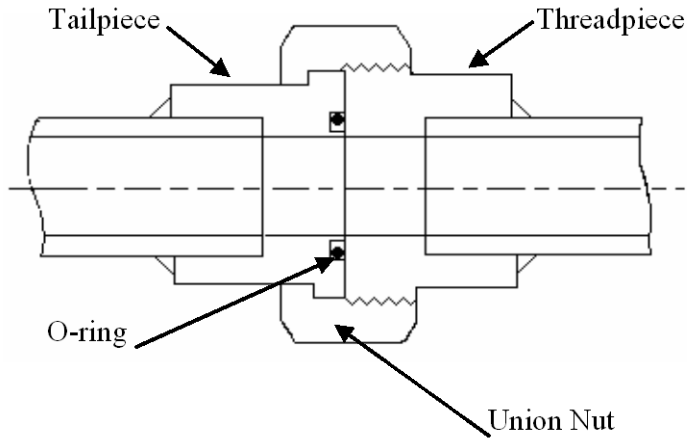

b. Alignment. The alignment guidance applies only to newly installed unions. When remaking existing union joints, alignment is assumed to be correct if the union nut can be tightened most of the way by hand. When a particular joint exhibits repetitive failures, misalignment can be a contributing factor that must not be ruled out. Several significant failures of high-pressure air piping through post failure analysis were a direct result of piping misalignment problems, particularly gap. Excessive gap will result in the union providing the indication that the nut is sufficiently tightened when in fact the applied torque was only attempting to draw together bound piping.

c. Torque. Use of provided torque tables is optional. Good shop practice is normally sufficient for tightening unions. If it is desired to apply and document a specific torque where none is provided on drawings or other applicable documents, use the appropriate torque from the applicable torque table.

5.5.5.1 <u>O-Ring Union Joints Operating at a Pressure of 699 psig or less</u>.

a. Prerequisites.

(1) Material of union components and O-Rings shall be specified by applicable drawings, MSs, or technical manuals.

(2) Surface finish of the O-Ring sealing surfaces shall be as specified by applicable drawings/specifications. A finish of 63 R_a maximum in the O-Ring groove and sealing surface areas shall not be exceeded.

(3) The piping shall be visually inspected to determine that the centerline of pipes joining a union shall be parallel and intersecting.

b. Alignment. Verify proper alignment by:

(1) Loosening pipe hangers on sections of piping to be connected to ensure that the pipes line up properly without being forced into position.

(2) Checking the angular alignment is such that feeler gage dimensions taken at four equally spaced points around the circumference of the tailpiece is within 0.003", measured between the tailpiece and threadpiece ends. If the variation exceeds 0.003", the pipe shall be bent for correction.

(3) Bending the piping to achieve proper alignment. Bending shall not exceed the limits/dimensions on the applicable drawings or other design documents. Honing or heat shrinking to achieve alignment is not authorized.

c. Joint Assembly.

(1) Exercise caution during installation of the O-Ring to ensure grit or other foreign material is not present since particulate contaminants are the worst enemy of O-Ring installations. Cloths used for cleaning shall be lint free, since one small thread can cause leakage.

(2) Lubricate the joint threads using approved system fluids for O-Ring joints; i.e., system fluid for hydraulic systems and an approved lubricant from Table 5-1 of this chapter for air and gas systems.

(3) Lubricate the O-Ring with lubricant as called out in Table 5-4 of this chapter and spread lubricant lightly over the surfaces that will contact the O-Ring.

(4) Thread the union together as far as possible by hand.

CAUTION: DO NOT OVER-TIGHTEN UNIONS.

(5) Tighten the union using an appropriate sized wrench using a force no greater than that exerted by one man using one hand with a 12 inch wrench. It is understood that often wrenches of varying lengths are required due to space constraints. Use good judgment to exert the correct force on the wrench. Union sealing is not improved by tightening beyond hand tight. Further tightening only prevents loosening of the nut due to vibration.

(6) If required by a technical document, torque the nut to the required torque.

5.5.5.2 O-Ring Joints for a Gas System with Pressures of 700 psig to 2999 psig or Hydraulic Systems up to 3000 psig.

a. Perform the prerequisites, alignment, and joint assembly steps of paragraph 5.5.5.1 of this chapter.

CAUTION: DO NOT OVER-TIGHTEN UNIONS.

b. If required by a technical document, torque the union nut to the required torque listed in the technical document. If the technical document does not provide torque values, torque the union nut to the values listed in Table 5-5 below. If no specific requirement to torque the union nut exists, torque the union per paragraph 5.5.5.1.c (5) of this chapter.

Table 5-5 Torque Requirements for O-Ring Joints for a Gas System with Pressures of 700 psig to 2999 psig or Hydraulic Systems up to 3000 psig

Pipe Size	Torque (ft-lbs +/- 5%)	
	Minimum	Maximum
1/8	10	25
1/4	10	25
3/8	12	30
1/2	15	40
3/4	20	50
1	25	60
1-1/4	30	75
1-1/2	35	90
2	45	120
2-1/2	60	150

5.5.5.3 O-Ring Union Joints for Gas Systems 3000 psig or Greater.

a. Prerequisites.

(1) Material of union components and O-Ring shall be specified by applicable drawings.

(2) Inspect the union prior to alignment checks:

(a) Verify the threads on the union nut and mating tailpiece have no galling or thread deformation.

(b) Verify surface finish of the O-Ring sealing surfaces are as specified by applicable drawings/specifications. A finish of 63 R_a maximum in the O-Ring groove and sealing surface areas shall not be exceeded.

(c) Verify the O-Ring is free of laps or cuts and that the O-Ring is 90 durometer or harder.

b. Alignment. Alignment criteria will be verified when the piping is supported by one man without aid of mechanical devices, except for permanently installed hangers and foundations, as follows:

(1) Maximum gap between faces shall be 0.060".

(2) Maximum angular displacement between faces shall be 0.010".

(3) Maximum axial misalignment shall be 0.050".

(4) The maximum gap between the faces after assembly shall be 0.003". The suggested method for checking the correct gap is:

(a) Place two 0.010-inch thick lead strips between the faces of the union oriented at 90 degrees apart with the O-Ring removed.

(b) Tighten the union nut to obtain a minimum squeeze of approximately 0.006" on the lead strips.

(c) Remove the nut and measure the lead strips to obtain the maximum difference between the faces. The strips must also be within 0.003" of each other. If the strips are greater than 0.003" difference, the joint must be re-evaluated to determine the cause of the deficiency.

c. Joint Assembly. When the alignment requirements are met assemble the joint.

(1) Exercise caution during installation of the O-Ring to ensure grit or other foreign material is not present since particulate contaminants are the worst enemy of O-Ring installations. Cloths used for cleaning shall be lint free, since one small thread can cause leakage.

(2) Lubricate the joint threads using approved system fluids for O-Ring joints; i.e., system fluid for hydraulic systems and an approved lubricant from Table 5-1 of this chapter for air and gas systems.

(3) Lubricate the O-Ring with lubricant as called out in Table 5-4 of this chapter and spread lubricant lightly over the surfaces that will contact the O-Ring.

(4) Thread the union together as far as possible by hand.

(5) If required by a technical document, torque the union nut to the required torque listed in the technical document. If the technical document does not provide torque values, torque the union nut to the values listed in Table 5-6 below. If no specific requirement to torque the union nut exists, torque the union per paragraph 5.5.5.1.c (5) of this chapter.

Table 5-6 Torque Requirements for O-Ring Union Joints for Gas Systems 3000 psi or Greater

Pipe Size	Torque (ft-lbs ± 5%)	
	Minimum	Maximum
1/8	20	23
1/4	44	46
3/8	87	95
1/2	104	110
3/4	115	125
1	208	230
1-1/4	250	267
1-1/2	383	420
2	540	585
2-1/2	625	670

NOTE: FLANGE AND UNION O-RING SEALS ARE DISCUSSED IN SECTION 5.5 OF THIS CHAPTER.

5.6 O-RING SEALS.

5.6.1 Types of O-Ring Seals.

a. Static radial seals provide a seal between two stationary components.

b. Dynamic radial seals provide a seal between a stationary component and a moving component.

c. Static face seals provide a seal between two stationary surfaces such as between a valve bonnet and valve body.

d. Straight thread tube fitting boss seals provide a seal between a straight thread tube fitting and its boss.

5.6.2 General Acceptance Criteria and Guidance for O-Ring Seals, Grooves and Mating Sealing Surfaces. The acceptance criteria are complex for these types of seals. The craftsman and planning department personnel must correctly define the type of seal and the appropriate MS to determine acceptability of sealing surface finishes and defect correction.

a. The size and spacing of surface defects may be estimated visually.

b. R_a surface finish requirements apply only to surfaces surrounding acceptable surface defects and not to the surface defect areas themselves.

c. Hair-like visible defects with width and depth of 0.001" or less are acceptable regardless of length or location.

d. Diametral clearance, gland depth, and groove width and depth requirements apply to surfaces surrounding acceptable surface defects and not to the surface defect areas themselves.

e. The acceptance criteria in this section apply to O-Ring grooves designed to MIL-P-5514E and MIL-G-5514F. For O-Ring grooves not manufactured to MIL-G-5514F or MIL-P-5514E, or grooves formed by several mating parts, or where mating parts are not available for measurement, only surface defect and finish requirements apply. Diametral clearance and groove width requires engineering evaluation.

f. Any metal removal shall be held to the minimum necessary to meet acceptance criteria.

g. Where original design drawing allowances exceed criteria specified in this section, the maximum allowed on the drawing applies.

h. For static radial seals (see Figure 5-10 of this chapter), and static face seals (see Figure 5-12 of this chapter), measurement and recording of diametral clearance, gland depth, groove width, and depth to meet requirements of Table 5-7 and Table 5-9 of this chapter is required only when surfaces are reworked to eliminate unacceptable defects.

i. For dynamic radial seals (see Figure 5-11 of this chapter), measurement and recording of groove width to meet the requirements of Table 5-8 of this chapter are required only when surfaces are reworked to eliminate unacceptable defects. The diametral clearance and gland depth must always be measured to meet the requirements of Table 5-8 of this chapter; however, recording of these measurements is required only when surfaces are reworked to eliminate unacceptable defects.

j. Surfaces in contact with backup ring(s) are considered non-sealing surfaces. Non-sealing surface defect criteria apply.

5.6.3 Static Radial Seals. Items a. through j. of paragraph 5.6.2 of this chapter are applicable to this type of seal.

Figure 5-10 Static Radial Seals

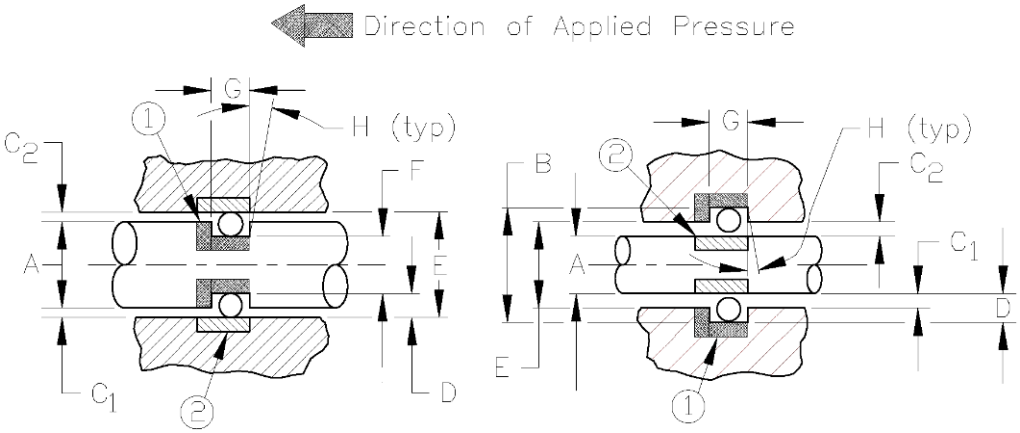

a. O-Ring groove, Figure 5-10, item [1], and mating sealing surface, Figure 5-10, item [2] of this chapter, must meet the requirements of Table 5-7 of this chapter.

b. O-Ring groove sealing surface, Figure 5-10, item [1] of this chapter, finish, except for surface defects accepted by Table 5-7 of this chapter, must be R_a 125 or smoother.

c. Mating sealing surface, Figure 5-10, item [2] of this chapter, finish, except for surface defects accepted by Table 5-7 of this chapter, must be R_a 63 or smoother.

d. Raised or sharp edges of acceptable surface defects on O-Ring groove, Figure 5-10, item [1], and mating sealing surface, Figure 5-10, item [2] of this chapter, are not acceptable.

e. If groove is repaired, groove face angle (dimension H) must not exceed 5 degree maximum.

f. O-Ring groove non-sealing surface defects must not exceed 0.060" in length or 0.030" in depth; average defect spacing must not be less than 1/8". General corrosion on non-sealing surfaces to a maximum depth of 0.001" is acceptable; all evidence of corrosion products must be removed, without exceeding O-Ring groove requirements of Table 5-7 of this chapter.

Table 5-7 Static Radial Seal Defect Criteria

Nominal O-Ring Cross-Section	Maximum Surface Defect Size		Minimum Surface Defect Spacing		Max Diamet Clear C**	Max Gland Depth	Max Groove Width		
	Width or Length	Depth	Avg.	Min			No Backup Rings	One Backup Ring	Two Backup Rings
1/16	0.004	0.002	3/64	1/64	0.006	0.060	0.106	0.161	0.219
3/32	0.006	0.003	1/16	1/32	0.008	0.093	0.154	0.196	0.258
1/8	0.008	0.004	3/32	1/32	0.009	0.126	0.202	0.249	0.318
3/16	0.012	0.008	1/8	3/64	0.009	0.190	0.297	0.350	0.440
1/4	0.015	0.010	5/32	1/16	0.012	0.250	0.392	0.492	0.596

All dimensions are in inches.

* Maximum gland depth equals $\frac{B\ (max) - A(Min)}{2}$ or $\frac{E\ (Max) - F\ (Min)}{2}$

** Maximum diametral clearance equals E (Max) – A (Min) or C1 + C2

Figure 5-11 Dynamic Radial Seals

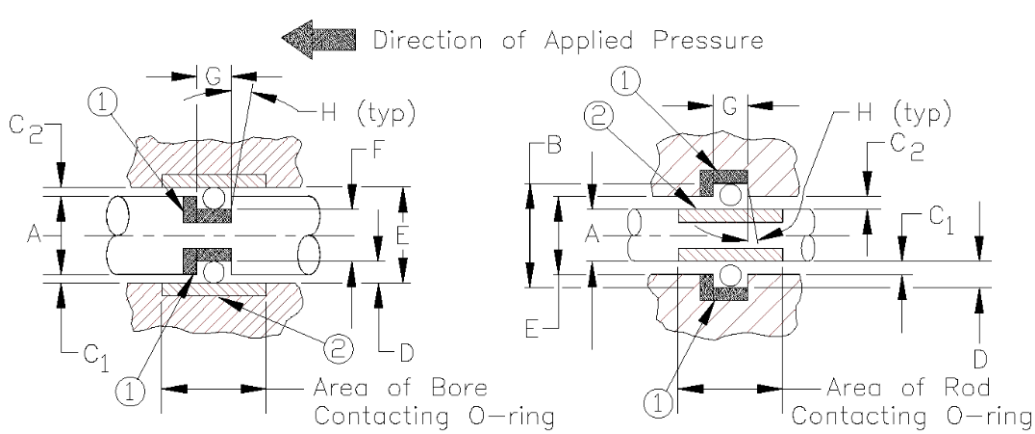

5.6.4 Dynamic Radial Seals. Items a. through g. and i. of paragraph 5.6.2 of this chapter are applicable to this type of seal.

a. O-Ring groove, Figure 5-11, item [1], and mating sealing surface, Figure 5-11, item [2] of this chapter, must meet the requirements of Table 5-8 of this chapter.

b. O-Ring groove sealing surface, Figure 5-11, item [1] of this chapter, finish, except for surface defects accepted by Table 5-8 of this chapter, must be R_a 63 or smoother.

c. Mating sealing surface, Figure 5-11, item [2] of this chapter, finish, except for surface defects accepted by Table 5-8 of this chapter, must be R_a 32 or smoother.

d. Raised or sharp edges of acceptable surface defects on O-Ring groove, Figure 5-11, item [1], and mating sealing surface, Figure 5-11, item [2] of this chapter, are not acceptable.

e. If groove is repaired, groove face angle (dimension H) must not exceed 5 degrees maximum.

f. O-Ring groove non-sealing surface defects must not exceed 0.060" in length or 0.030" in depth; average defect spacing must not be less than 1/8". General corrosion on non-sealing surfaces to a maximum depth of 0.001" is acceptable; all evidence of corrosion products must be removed, without exceeding O-Ring groove requirements of Table 5-8 of this chapter.

Table 5-8 Dynamic Radial Seal Defect Criteria

Nominal O-Ring Cross-Section	Maximum Surface Defect Size		Minimum Surface Defect Spacing		Max Diamet Clear C**	Max Gland Depth		Max Groove Width		
	Width or Length	Depth	Avg.	Min		O-Rings D*	Quad Rings Or Quad X Seals D*	No Backup Rings	One Backup Ring	Two Backup Rings
1/16	0.003	0.002	1/32	1/64	0.006	0.060	0.062	0.106	0.161	0.219
3/32	0.004	0.002	3/64	1/64	0.008	0.093	0.095	0.154	0.196	0.258
1/8	0.005	0.003	1/16	1/64	0.009	0.126	0.129	0.202	0.249	0.318
3/16	0.008	0.004	5/64	1/64	0.009	0.190	0.197	0.297	0.350	0.440
1/4	0.010	0.005	7/64	1/32	0.012	0.250	0.257	0.392	0.492	0.596

All dimensions are in inches.

* Maximum gland depth equals $\frac{B\,(max) - A(Min)}{2}$ or $\frac{E\,(Max) - F\,(Min)}{2}$

** Maximum diametral clearance equals E (Max) – A (Min) or C1 + C2

5.6.5 Static Face Seals. Items a. through h. of paragraph 5.6.2 of this chapter are applicable to this type of seal.

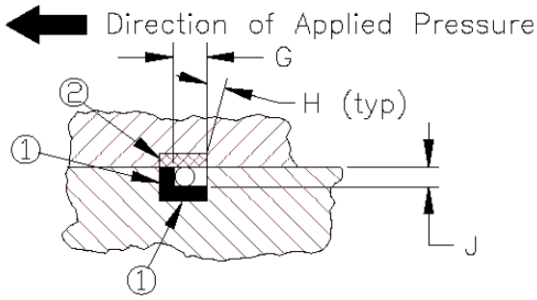

Figure 5-12 Static Face Seal

a. O-Ring groove, Figure 5-12, item [1], and mating sealing surface, Figure 5-12, item [2] of this chapter, must meet the requirements of Table 5-9 of this chapter.

b. O-Ring groove sealing surface, Figure 5-12, item [1], and mating sealing surface, Figure 5-12, item [2] of this chapter, finishes, except for surface defects accepted by Table 5-9 of this chapter, must be R_a 125 or smoother.

c. Raised or sharp edges of acceptable surface defects on O-Ring groove, Figure 5-12, item [1], and mating sealing surface, Figure 5-12, item [2] of this chapter, are not acceptable.

d. If groove is repaired, groove face angle (dimension H) must not exceed 5 degrees maximum.

e. O-Ring groove non-sealing surface defects must not exceed 0.060" in length or 0.030" in depth; average defect spacing must not be less than 1/8". General corrosion on non-sealing surfaces to a maximum depth of 0.001" is acceptable; all evidence of corrosion products must be removed, without exceeding O-Ring groove requirements of Table 5-9 of this chapter.

Table 5-9 Static Face Seal Defect Criteria

Nominal O-Ring Cross-Section	Maximum Surface Defect Size		Minimum Surface Defect Spacing		Max Groove Depth J	Min Groove Depth* J	Max Groove Width
	Width or Length	Depth	Avg.	Min			
1/16	0.004	0.002	3/64	1/64	0.058	0.050	0.106
3/32	0.006	0.003	1/16	1/32	0.091	0.074	0.154
1/8	0.008	0.004	3/32	1/32	0.124	0.101	0.202
3/16	0.012	0.008	1/8	3/64	0.188	0.152	0.297
1/4	0.015	0.010	5/32	1/16	0.242	0.201	0.392

All dimensions are in inches.

* Drawing requirements apply if minimum groove depth is less than specified in Table 5-9.

5.7 V-RING PACKING SEALS. V-Ring or chevron type packing seals are used primarily in high pressure, constant movement hydraulic applications requiring a dynamic seal between the cylinder gland and the operating rod. For surface ships, the most common application is in steering gear hydraulic rams. In submarines, they are used in all steering and diving gear hydraulic rams.

Figure 5-13 V-Ring Packing Seal

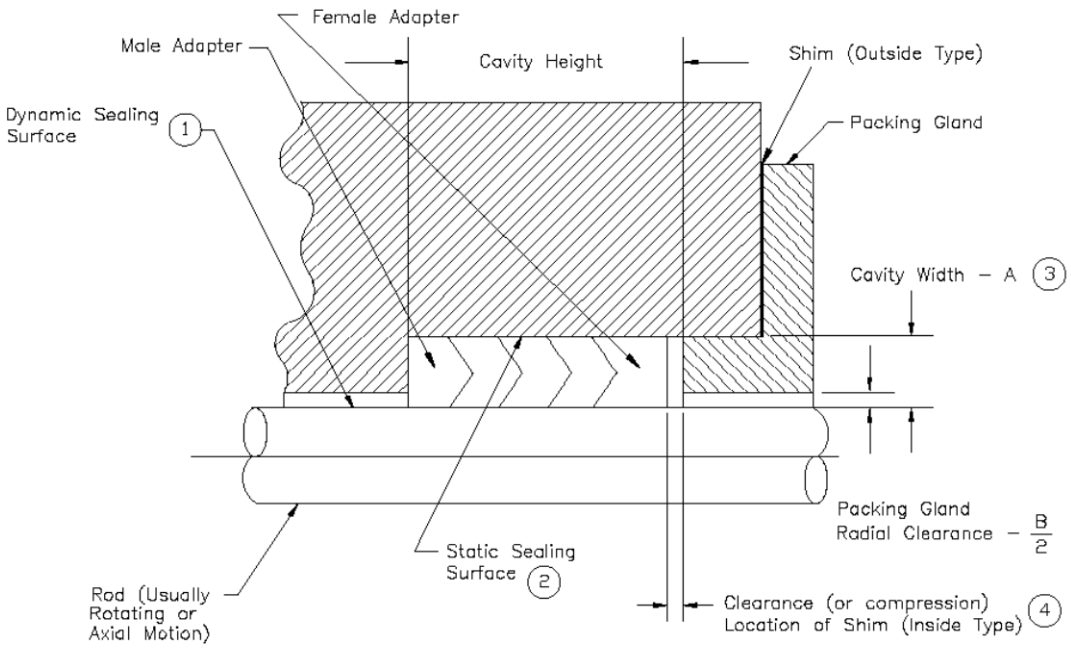

a. The size and spacing of surface defects may be estimated visually.

b. Surface finish requirements apply only to surfaces surrounding acceptable surface defects and not to the surface defect areas themselves.

c. Diametral clearance and cavity height and width requirements apply to surfaces surrounding acceptable surface defects and not to the surface defect area themselves.

d. Hair-like visible defects with width and depth of 0.001" or less are acceptable regardless of length or location.

e. Any metal removal shall be held to the minimum necessary to meet acceptance criteria.

f. Where original design drawing allowances exceed criteria specified in this section, the maximum allowed on the drawing applies.

g. V-Ring packing cavity width and packing gland diametral clearance with rod must always be measured to meet the requirements of Table 5-10 and Table 5-13 of this chapter, respectively; however, recording of these measurements is required only when surfaces are reworked to eliminate unacceptable defects.

(1) V-Ring packing sealing surfaces.

(a) V-Ring packing dynamic sealing surface, Figure 5-13 item [1], and static sealing surface Figure 5-13 item [2] of this chapter, must meet the requirements of Table 5-10 below.

(b) Raised or sharp edges on acceptable surface defects are not acceptable.

Table 5-10 V-Ring Packing Sealing Surface Requirements

Surface	Maximum Surface Defect Size		Minimum Surface Defect Spacing		Remaining Surface Finish
	Width or Length	Depth	Avg.	Min	
Dynamic Sealing Surface	0.010	0.005	7/64	1/32	R_a 32
Static Sealing Surface	0.015	0.010	5/32	1/16	R_a 63
All dimensions are in inches.					

(c) Packing cavity width, Figure 5-13 item [3] of this chapter, must not exceed maximum drawing dimensions or the requirements of Table 5-11 below, whichever is greater.

Table 5-11 Packing Cavity Width Requirements

Nominal V-ring Cross-Section	Dimension A Maximum Packing Cavity Width
3/16	0.194
1/4	0.256
5/16	0.321
3/8	0.385
7/16	0.452
1/2	0.515
All dimensions are in inches.	

(2) V-Ring packing gland.

(a) V-Ring packing gland surfaces must meet the requirements of Table 5-12 below.

(b) Raised or sharp edges on acceptable defects are not acceptable.

Table 5-12 V-Ring Packing Gland Surface Requirements

Surfaces	Maximum Acceptable Surface Defect Size		Minimum Acceptable Surface Defect Spacing	
	Width or Length	Depth	Avg.	Min
Packing Gland Bore	0.060	0.030	1/8	-
Packing Gland Face (in way of Adapter)	0.040	0.020	3/8	3/16
All dimensions are in inches.				

(c) Diametral clearance with rod must not exceed maximum drawing dimensions or requirements of Table 5-13 below, whichever is greater.

Table 5-13 Diametral Clearance Requirements

Packing Gland Max Diametral Clearance with Rod OD Dimension B			
Nominal V-ring Cross-Section Dimension A	Metallic Adapters	Non-Metallic Adapters	
		Max System Pressure 1500 psi	Max System Pressure 3000 psi
3/16	0.030	0.005	0.003
1/4	0.035	0.006	0.004
5/16	0.040	0.007	0.005
3/8	0.045	0.009	0.006
7/16	0.050	0.010	0.007
1/2	0.055	0.012	0.008
All dimensions are in inches. Dimension B = Packing Gland ID minus Rod OD			

(3) V-ring packing cavity depth assembly.

(a) Compression equals the total decrease over installed stack height that the packing undergoes due to installation and adjustment of the packing gland.

(b) Installed stack height is the total height that the packing occupies when installed in the packing cavity without the packing gland installed. This height may be greater than the free stack height due to the effect of squeezing the packing into the cavity.

(c) Shims may be used outside the packing gland, under the flange, or inside the gland to obtain the required clearance or compression.

1 Endless rings. Clearance, Figure 5-13 item [4] of this chapter, (float space) between packing and gland ring must be from 0 to 0.030" (preferred for use where installation of endless rings is practicable).

2 Split rings. Compression, Figure 5-13 item [4] of this chapter, of installed packing must be from 0.010" to 0.030".

5.8 INSPECTIONS.

5.8.1 General Requirements. This section provides the minimum requirements and guidance for the performance of inspections. Inspections during the performance of maintenance form one of the fundamental elements essential in assuring that the task is completed properly and in compliance with all specifications. Inspections occur during the in-process phase of repair/maintenance (disassembly, repair, and re-assembly) and the re-certification phase (testing). Inspections serve to provide a careful and critical examination of the areas being inspected and form one of the cornerstones of a successful QA Program. Use of inspections have and will continue to establish the OQE necessary for ensuring compliance to technical requirements.

5.8.2 Inspection Records. Inspection records provide a lasting record that the inspection was performed and completed according to the applicable specifications. Inspection records will be maintained when required for OQE and will be documented on appropriate QA forms contained in this volume, or as Certification Signature Blocks in the Formal Work Package (FWP).

5.8.3 Critical Inspections. An inspection on any system or component, which by its nature is so critical to the successful completion of the task, that the inspection requires verification by a separate individual, other than the craftsman, qualified as an inspector. These inspections will be annotated in the written work procedure by the presence of an (I) or circle I, or in the case of Cleanliness Inspections (CI) or circle CI in the margin next to the applicable paragraph requiring the inspection and will be documented either as a Certification Signature Block (for those nuclear work items in Part 2 Chapter 1 of this volume) or signature, as applicable, in the FWP or on the appropriate QA form.

NOTE: THESE ARE CONSIDERED MINIMUM REQUIREMENTS FOR USAGE OF AN INDEPENDENT INSPECTOR DURING THE PERFORMANCE OF CONTROLLED WORK. IT MUST BE UNDERSTOOD THAT THE REQUIREMENTS FOR AN INDEPENDENT INSPECTOR DO NOT NECESSARILY MEAN THAT THE DATA PROVIDED IS RETAINABLE AS OQE. VARIOUS SOURCE DOCUMENTS ADDRESS RECORD RETENTION AND SHALL BE FOLLOWED FOR ENSURING THE PROPER OQE IS RETAINED.

a. Critical Inspections applicable to all platforms are as follows:

(1) Inspections performed for all acceptance testing (e.g., hydrostatic testing, drop tests, joint tightness tests, weight tests) for certification of work completed under a Controlled Work Package (CWP). (Nuclear and non-nuclear manually operated valves which have adjustable packing do not require certification by an independent inspector.)

(2) Inspections performed to verify permanent markings of Level I material (those which the Fleet Maintenance Activity (FMA) manufacture, upgrade, or transfer to smaller pieces of controlled material). These inspections may also be performed by a Controlled Material Petty Officer.

(3) Mechanical measurements used to verify wall thickness of components for work performed using a CWP.

(4) Inspections performed for post machining of any Level I component.

(5) All sealing surface inspections for work performed as a Controlled Assembly.

(6) Inspections for oxygen, nitrogen, and hydrogen systems cleanliness as required by reference (k). These independent inspections are performed by personnel qualified as Oxygen Clean Workers in accordance with reference (k).

(7) Material receipt inspection. These inspections may also be performed by a Controlled Material Petty Officer.

(8) Weight testing to certify or re-certify shipboard cranes when repairs are performed in accordance with reference (l).

(9) Performance of Emergent Controlled Work in accordance with Part I, Chapter 2 of this volume.

(10) Verification of body bound stud standout measurements and break away torque for stud installations in SOC, SUBSAFE and Level I systems.

b. Additional Critical Inspections applicable to submarines and Deep Submergence Systems only.

(1) Sealing surface inspections for all SUBSAFE Hull Integrity joints and SOC bolted pressure boundary joints.

(2) Hull Integrity joint body bound stud inspections. For new stud installations, this includes stud standout measurements and break away torque verification. For studs that were not removed and are to be reused, this includes verification of markings of significance (.K. or KM) or completion of generic material identification check.

(3) Final torque verification of SUBSAFE Hull Integrity and SOC bolted pressure boundary joints.

(4) Verification of new controlled material installed into the SUBSAFE or SOC boundary.

(5) Verification of proper software installation in SUBSAFE Hull Integrity or SOC bolted pressure boundary joints.

(6) Stack height measurement verification for hull packing installation (e.g., periscope, rudder, planes).

(7) Seat tightness tests of SUBSAFE hull and backup valves. When seat tightness testing is impractical, verification of stack height and cavity dimensions or seat blue checks as applicable.

c. Reactor plant inspection and certification requirements are contained in Part II, Chapter 1 of this volume.

d. Visual inspection of submarine structure in between Unrestricted Operations (URO) MRC 003 Inspections.

NOTE: NOT APPLICABLE TO SUBMARINES AT SEA OR SHIP'S FORCE MAINTENANCE ACTIONS OUTSIDE A SCHEDULED REFIT/FLEET MAINTENANCE AVAILABILITY/CHIEF OF NAVAL OPERATIONS AVAILABILITY. THE SHIP SHALL REPORT ANY UNUSUAL, UNEXPECTED OR POTENTIALLY DANGEROUS CONDITIONS AND/OR LARGE PRESERVATION FAILURES TO THE TYPE COMMANDER (TYCOM) AS SOON AS POSSIBLE. CURRENT SHIP'S MAINTENANCE PROJECT ENTRIES SHALL DOCUMENT DEFICIENCIES FOUND AND DEPARTURES FROM SPECIFICATION (DFS) SHALL BE WRITTEN IF SO DIRECTED BY TYCOM.

(1) Submarine tanks and other areas not scheduled for a URO MRC 003 inspection but which are opened/entered for other reasons shall receive a visual examination in the vicinity of work being conducted and the path to the work by personnel qualified per reference (m) for any evidence of preservation systems breakdown, corrosion, thickness reduction, and/or deformation and cracking. Any evidence of the above shall be evaluated in accordance with the requirements of references (m) and (n). Any unusual, unexpected or potentially dangerous conditions such as, but not limited to, large preservation failures, extensive early corrosion or severe damage shall be reported immediately to NAVSEA (SEA 07T12) via TYCOM by telefaxed letter or message to determine if there is a structural integrity problem.

(2) Previously obscured areas (i.e., areas not visible during normal operations) of the submarine pressure hull, non-pressure hull, tanks and/or supporting structure (interior or exterior) in way of any components, hull insulation, or damping or acoustic material which is removed for other reasons shall receive a visual examination by personnel qualified per reference (m) for any evidence of preservation systems breakdown, corrosion, thickness reduction, and/or deformation and cracking. Any evidence of the above shall be evaluated and corrected in accordance with the requirements of references (m) and (n). Results of examinations shall be submitted in accordance with the reporting format required by references (m) and (n). Any unusual, unexpected, or potentially dangerous conditions such as, but not limited to, large

preservation failures, extensive early corrosion, or severe damage shall be reported immediately to NAVSEA (07T12) via TYCOM by telefaxed letter or message to determine if there is a structural integrity problem.

5.8.4 Cleanliness Inspections. Cleanliness controls are required to prevent the entry of foreign material which could interfere with the operation of any system or component. Cleanliness controls are essential during maintenance with the degree of control depending upon the system and work to be accomplished. Steam plant system cleanliness controls are necessary to minimize corrosion of steam plant materials and prevent the entry of foreign materials into the steam plant. Improper cleanliness controls can result in damage to operating machinery, chloride contamination, or fouling of system components. The time spent making sure the work site is clean and system openings are properly controlled will help prevent premature component failure and rework.

a. Cleanliness Inspectors are individuals who are trained and qualified to perform CI required by work procedures for systems/components requiring cleanliness controls. At the TRIDENT Refit Facilities, they are called Cleanliness Certifiers.

NOTE: ALL SYSTEMS REQUIRE VARYING DEGREES OF CLEANLINESS CONTROLS, BUT MAY NOT REQUIRE AN INDEPENDENT INSPECTOR. CRITICAL QUALITY CONTROL POINT INSPECTIONS BY SUPERVISORY PERSONNEL SHOULD BE USED WHERE APPROPRIATE.

b. Acceptance inspections of cleanliness by an independent inspector (Cleanliness Certifier/Inspector) are required for the following as a minimum:

(1) Oxygen, nitrogen, and hydrogen systems per reference (k).

(2) Naval Nuclear Propulsion systems in accordance with Part II, Chapter 1, Appendix B of this volume.

c. Results of cleanliness acceptance inspections required by paragraph 5.8.4.b of this chapter shall be documented in the Technical Work Document and certified by a signature. These inspections will be identified by a (CI) or circle CI in the left margin, if performed by an independent inspector.

d. There are no specific requirements for independent CI/acceptance by a Cleanliness Certifier/Inspector, during steam plant (nuclear or fossil fuel) system maintenance. However, for maintenance involving steam plant (nuclear) systems, the cleanliness requirements for steam plant (nuclear) systems from Chapters 1 and 3 of reference (o) apply. For steam plant (fossil fuel) or general shipboard systems listed in paragraph 5.8.6 of this chapter, the cleanliness requirements shall be determined during the work planning phase. Many jobs may be performed using craftsman to verify cleanliness vice requiring independent Cleanliness Inspector presence. When the risk or consequence of loss of cleanliness is minimal during a maintenance action, such as work requiring bonnet removal from a small steam valve, maintenance of cleanliness may be verified by the craftsman. When the risk or consequences of loss of cleanliness is significant, such as when removing the bonnet from a main steam root valve, work involving opening of turbine throttles, or when the type or quantity of detrimental materials (e.g., cutting oils) pose a significant risk, the use of an independent inspector to verify maintenance of cleanliness should be considered by the Department Head, Quality Assurance Officer (QAO), and Planning Officer (if assigned).

e. It is the responsibility of Ship's Force to ensure the appropriate cleanliness control requirements are incorporated in any maintenance for which clear responsibility for cleanliness is not assigned.

5.8.5 Nuclear Propulsion Plant and Nuclear Support Facility General Cleanliness Requirements.

5.8.5.1 Reactor Plant.

NOTE: INFORMATION ON THIS SUBJECT IS SAFEGUARDED IN ACCORDANCE WITH NAVSEAINST C5511.32 AND IS CONTAINED IN PART II CHAPTER 1 OF THIS VOLUME.

5.8.5.2 Steam Plant. Reference (o) provides a list of applicable steam plant systems and the minimum steam plant cleanliness requirements. It applies to all steam plant work performed in naval nuclear powered ships when not at a shipyard. This chapter also applies to steam plant work performed by forces afloat when at a shipyard.

a. Nuclear powered ship steam plant maintenance affecting those systems listed in Chapter 1 of reference (o) shall be assigned only to activities that have reference (o) in force.

b. The Steam Plant Manual/Steam and Electric Plant Manual shall be consulted for cleanliness requirements when performing steam plant maintenance.

c. If a loss of cleanliness occurs as explained in reference (o), then cleanliness shall be reestablished according to the requirements and procedures of reference (o). Additionally, upon a loss of cleanliness the QAO, the Lead Work Center Division Officer, and appropriate Department Head(s) will approve the recovery procedure.

d. Control of tools and maintenance products will be per reference (o).

e. Reference (o) cleanliness requirements for Nuclear Aircraft Carrier catapult steam and drain systems shall be complied with regardless of which Department Head has responsibility for the system.

5.8.5.3 Nuclear Support Facility.

a. Reference (p) provides specific cases that invoke reference (o) and reference (q).

b. Where the above references do not address a specific Nuclear Support Facility system or component, reference (o) may be used for guidance as determined to be appropriate. The component technical manuals and NSTMs should also be consulted for cleanliness requirements as appropriate.

5.8.5.4 Standard Lubricants and Penetrating Fluid. General overhaul specifications for reactor plants and Nuclear Support Facility Manuals for Destroyer Tenders and Submarine Tenders require the use of reference (r). Reference (o) contains requirements to control detrimental materials.

5.8.6 General Shipboard Steam Plant (Fossil Fuel) Systems Cleanliness Requirements.

5.8.6.1 Purpose. To define the general requirements for cleanliness controls during maintenance/repair of steam plant systems on fossil fueled surface ships.

5.8.6.2 Applicability. The requirements of this paragraph are applicable to the following steam plant systems:

a. Main Steam.

b. Auxiliary Steam (Defined as steam which returns to the boiler).

c. Feedwater.

d. Condensate.

e. High Pressure Drains.

f. Reserve Feedwater.

g. Heating steam and condensate return piping from distilling units.

h. Catapult steam and steam drains.

5.8.6.3 Discussion. Significant contamination of boilers with chlorides and/or other detrimental materials has resulted from the introduction of foreign materials into steam plant systems during maintenance onboard conventionally powered ships. The guidance for foreign material exclusion and general cleanliness controls for steam plant system components (e.g., boilers, turbines, condensers) are formally promulgated by NSTMs. However, there is no definitive NAVSEA guidance for many of the steam plant systems piping on conventionally powered ships during maintenance and repair. Therefore, the guidance for cleanliness controls provided in the following paragraphs is for those instances where there is no definitive NAVSEA guidance.

5.8.6.4 Requirements. During general maintenance that breaks the system boundaries, the following cleanliness controls will be implemented:

a. Maintenance of cleanliness.

(1) Temporary covers or plugs will be installed on all steam system piping, components, and tanks opened for work except during the time that the opening must actually be uncovered to perform the work. Covers and plugs will be designed to preclude loose pieces from entering the steam system. Covers and plugs will be rubber, metal, or rigid plastic and will be securely fastened to the component or piping.

(2) Following maintenance and prior to removing plugs or covers from inside piping or components, inspect and thoroughly clean the work area to ensure that no tools, rags, lubricants, or other foreign materials are left inside. This includes removal of loose scale and other easily removed corrosion products, as well as removal of residue from grinding, chipping, welding, or other maintenance.

b. Control of foreign material introduction.

(1) New or repaired components should be cleaned to the maximum extent practical without disassembly prior to installation into the system to ensure preservatives, desiccants, etc. are removed.

(2) Assembly and maintenance may require the use of lubricants, sealants, and other compounds. Those compounds should be used only as authorized and only applied in the flow path, if authorized by the process instruction.

(3) During all maintenance, ensure action is taken to ensure all foreign materials are removed following the maintenance and prior to system operations.

(4) Water used for cleaning or flushing steam plant systems must meet the criteria for steam plant makeup/feedwater.

c. Verification of cleanliness. When verification of cleanliness is required, verification should be accomplished by visual inspection. If configuration of the system or component precludes visual inspection, and cleanliness has not been maintained, then flushing may be used to verify cleanliness.

(1) Visual inspections will be conducted using normal reading level lighting. Mirrors and borescopes may be used provided resolution is sufficient to verify cleanliness.

(2) Components should not be disassembled just to conduct visual cleanliness verification. Instead a flush may be used to verify cleanliness. Valves may have the visual inspection performed on the accessible portions of the flow area.

(3) Flushes will be conducted for period of not less than five minutes.

(4) Visual inspection acceptance criteria.

(a) No grease, oil, or other foreign material.

(b) For uncoated surfaces, tightly adherent corrosion products typical for the type of material (e.g., carbon steel) are acceptable. No loose corrosion products may be present.

(c) For coated surfaces, the coating must be acceptable to the process instruction used to apply the coating. No loose corrosion products may be present.

(5) Flush acceptance criteria (Visual).

(a) For water flushing, the water sample must be free of foreign material.

(b) For steam flushing, a sample of condensate downstream of the area being flushed must be free of foreign material.

(c) For lines flushed with compressed gas, place a white filter cloth at the outlet to collect debris. After flushing, the cloth must contain only light speckling and/or staining due to rust and dirt and must contain no readily apparent quantities of foreign materials (e.g., metal shavings, abrasive grit, oil).

(d) For piping where direct sampling of the flush effluent is not possible, the following requirements apply:

1 For lines that cannot be directly sampled during flushing (e.g., lines that discharge into a tank or condenser without drains or sample taps between the area being flushed and the tank), flush for five minutes. Sample the collected discharge from the tank, the water sample must be free of foreign material.

2 Dead-ended piping in a line being flushed by opening a mechanical connection, will have water, steam, or gas (as applicable) flushed past the dead end connection to the main stream for a minimum of five minutes at the maximum practical flow rate. When cleanliness is verified for the main stream, it is also verified for the dead-ended piping.

3 For piping which cannot be sampled because it discharges overboard, flush for at least five minutes. No acceptance criteria are applicable.

5.8.7 Set Stud Inspection. During disassembly or reassembly, inspect set studs to ensure no rotation is exhibited during nut loosening and tightening. Where direct visual inspection is not possible, marking the top of the stud (e.g., felt tip marker) to a reference point on the assembly may be used. Rotation of any stud during disassembly is cause for rejection and the stud must be reset prior to final assembly. If marking is used, use care to not remove material markings such as material color coding during marking removal.

5.9 SOFTWARE.

5.9.1 Determination of Acceptability and Use of Piping System Software. To assist in the determination of acceptability of non-metallic packing materials (e.g., O-Rings, wall seals) for installation in non-nuclear and nuclear systems, decision aids have been developed from reference (j) and are provided in Appendix A. In case of question or conflict the requirements of reference (j) apply. Additional guidance regarding non-metallic seals is provided in the following paragraphs.

a. It is Fleet policy that software (e.g., O-Rings, gaskets) will be reused only as a last resort. If new software is not available, software may be used after satisfactory inspection for damage, resiliency, discoloration, or cracking in accordance with reference (j).

b. In all cases, the guidance provided in applicable NAVSEA technical documents (e.g., drawings, component technical manuals, references (j) and (s) for nuclear and non-nuclear applications) will be followed.

c. Reuse of software during daily Planned Maintenance System (PMS) or other specified situations. The practice of not reusing software does not apply to items of daily PMS (e.g., drain pump strainer, lubricating oil strainers) or the Logistics Escape Trunk on submarines and, therefore, the O-Ring or gaskets may be reused provided the software has been inspected and is not damaged.

d. Software which have exceeded their recommended shelf life may be used in naval reactor plant applications provided the following criteria are met:

(1) The software has been properly stored in its original package.

(2) Software shall be inspected as part of issuing the software for a job or prior to installation. Inspection by a QAI or Controlled Material Petty Officer is not required. No certification signatures are required. The user activity shall define who shall test software with expired shelf lives to ensure they are adequately tested.

(3) Except for tubing, each surface of the material shall be examined. For tubing, only the outside surface shall be examined. The software shall be resilient and show no evidence of cracking, discoloration, flaking, tackiness, brittleness, surface contaminants, or other physical damage. Further, each surface shall be inspected and shall exhibit no cracks under 5X magnification when it is deformed as follows:

(a) For flat pieces, strips, and O-Rings, bend material onto itself over a rod of diameter (d) no greater than the cross sectional thickness (t) as illustrated in Figure 5-14 below:

Figure 5-14 Simple Software Deformation Inspection

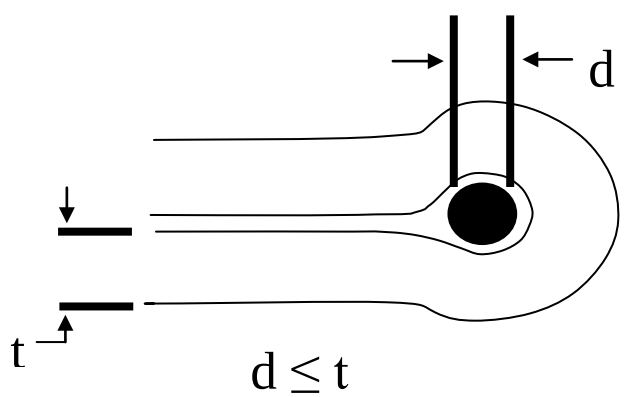

(b) For complex shapes or parts with non-uniform cross section which closely resemble flat pieces, strips, or O-Rings, bend the material at least 90 degrees over a rod of diameter (d) no greater than the maximum cross sectional thickness (t or w) as illustrated in Figure 5-15 below.

Figure 5-15 Complex Software Deformation Inspection

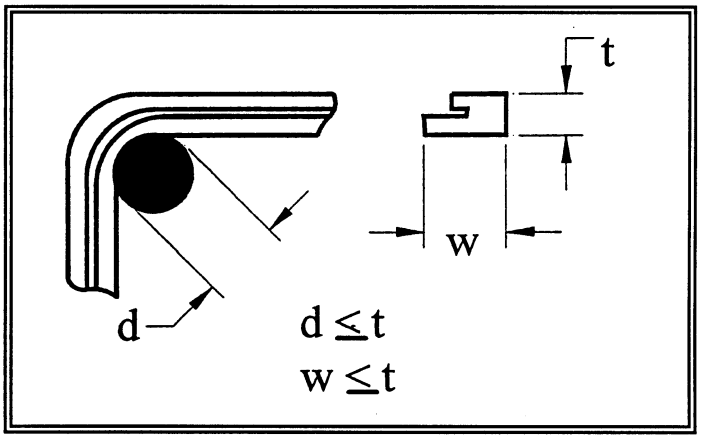

(c) For parts which do not fall into the above categories and parts which are too stiff to be deformed as required, approval shall be obtained on a case basis from the respective Reactor Plant Planning Yard via a Liaison Action Request per Part I, Chapter 8, Section 8.4 of this volume.

5.10 SUBMARINE SAFETY MAINTENANCE CERTIFICATION/RE-ENTRY CONTROL NUCLEAR AND NON-NUCLEAR.

5.10.1 Purpose. To promulgate the policy and procedures for:

a. Maintaining continuity of SUBSAFE certification during the operating cycle.

b. General Maintenance Certification Record administrative requirements.

5.10.1.1 General.

a. Reference (t) establishes the SUBSAFE certification criteria which must be accomplished on submarines in order for NAVSEA to recommend UROs to design test depth. Once the certification criteria are satisfied, NAVSEA will make a recommendation to the appropriate TYCOM that the submarine be authorized for URO to design test depth. Based upon the NAVSEA recommendation, TYCOM will authorize the submarine to operate to design test depth, or some lesser depth depending upon specific conditions. Each TYCOM summarizes the authorized operating depths and restrictions for ships in reference (u) or (v).

b. Continued URO to design test depth is dependent on:

(1) The positive control and re-certification of all re-entries into the SUBSAFE or hull integrity boundaries of the ship and

(2) The satisfactory and timely completion of URO MRC requirements.

5.10.2 Re-Entry Control Program.

a. Applicability. This section is applicable whenever work is accomplished within a SUBSAFE boundary as defined by SUBSAFE Requirements Manual, reference (t), and as depicted in the SUBSAFE Certification Boundary Book.

NOTE: SUBSAFE REQUIREMENTS MANUAL IS THE FINAL AUTHORITY FOR DETERMINING IF AN ITEM IS WITHIN THE SUBSAFE BOUNDARY. THE SUBSAFE CERTIFICATION BOUNDARY BOOK IS AN ILLUSTRATED REFERENCE TO AID IN THE DETERMINATION OF WHETHER AN ITEM IS SUBSAFE OR NOT.

b. General. The Re-Entry Control (REC) Program includes those elements associated with maintenance and/or repair necessary to maintain the certification established by NAVSEA. The program provides auditable OQE of the following:

(1) What work was accomplished, including material and components used, re-test requirements, tests performed, and test data.

(2) Why work was required.

(3) Who authorized and accepted the REC.

(4) Who did the work.

(5) When and where the work was accomplished, including the work and re-test boundaries.

c. When it becomes necessary to re-enter a SUBSAFE certified system or structure, it will be accomplished in accordance with the requirements and procedures of paragraph 5.10.4 of this chapter. Specific direction on completing the Maintenance Certification Record (MCR) (QA form 9) is contained in the instructions for QA form 9.

d. Some exceptions to RECs are allowed due to frequent entry into the certified boundary for routine operations or maintenance actions. These exceptions and administrative and/or operational control requirements are contained in paragraph 5.10.7 of this chapter.

e. NAVSEA SUBSAFE Grams are not authorized for use by submarines or maintenance activities managed by the TYCOM. SUBSAFE Grams will be engineered into the Joint Fleet Maintenance Manual where appropriate.

5.10.3 Nuclear Submarine Safety System Re-Entry. When Re-Entry of a nuclear SUBSAFE system or a portion of a nuclear SUBSAFE system is necessary, the applicable Reactor Plant Manual, reference (e), and the ship's specific Reactor Plant Work Accomplishment Report (RPWAR) will be reviewed and used to provide technical guidance. Nuclear SUBSAFE Re-Entry will be in accordance with the requirements and procedures of Section 5.11 of this chapter. Specific guidance on Reactor and Propulsion Plant Fresh Water Heat Exchanger maintenance is contained in Part II, Chapter 1, Appendix B of this volume.

5.10.3.1 Reactor Plant Planning Yard Liaison Action Requests.

NOTE: INFORMATION ON THIS SUBJECT IS SAFEGUARDED IN ACCORDANCE WITH NAVSEAINST C5511.32 AND IS CONTAINED IN PART II, CHAPTER 1 OF THIS VOLUME.

5.10.4 Re-Entry Control Administrative Procedures.

a. General. REC procedures provide a continuous, auditable record of work done on fully certified systems to provide positive assurance that they remain "certified". Continuity of Certification is mandatory throughout the operational life of the ship to ensure URO to design test depth.

b. REC. When re-entry of a SUBSAFE system or a portion of a SUBSAFE system (or component) is necessary, the work and re-certification of the work will be documented using the MCR/REC, QA form 9.

(1) A MCR/REC will be used for each re-entry of the pressure hull and/or each certified system, certified component or portion thereof as defined by the SUBSAFE certification boundaries.

(2) A MCR/REC will be restricted to a single system within a single mapping plan, a single component removed from a system, or a single component removed/worked that requires multiple mapping plans (e.g., trash disposal unit, Main Sea Water hull/backup valves and hydraulic actuators, modified after signal ejectors).

(3) When a MCR/REC is opened by a ship to permit removal of a component by Ship's Force for repair by an FMA as a "ship to shop" job, a MCR/REC must be opened by the FMA to cover the work and retesting of the work center work performed by the FMA.

(4) Where other certified systems must be re-entered to accomplish a MCR/REC, each system will have its own MCR/REC, except as described in paragraph 5.10.4.b.(2) above.

(5) The MCR/REC and records of MCR/REC will contain all of the OQE necessary to comply with paragraph 5.10.2.b above.

(6) The work procedures associated with a MCR/REC will contain sufficiently detailed instructions to assure that all requirements for certification are properly accomplished and documented.

(7) Work and test boundaries will be defined in terms that are unique and directly identifiable with the specific mapping plan and/or task involved.

(8) When work and test boundaries are different, both boundaries will be set forth. The work boundaries, test boundaries and pressure boundaries should be specified and should not be confused. Work boundaries define the limits to which work was performed. Test boundaries define the limits for testing to certify the work; these tests may involve actuators, indicators or components other than those actually repaired. Pressure boundaries define (perhaps by valve lineups) the limits of the system which were pressurized to hydrostatically test the work. The pressure boundaries and test boundaries may be the same.

(9) On a "ship to shop" job the work boundaries may be best described by system joint designators even though those joints were not "disturbed" by the FMA (e.g., rebuild a Rubber Insert Sound Isolation Coupling (RISIC), the work/test boundaries will be the end flanges that bolt up to the system, the joint identification numbers may be clearest identification of that boundary point).

(10) Previously certified hardware will be reused when certification is not affected by the re-entry, or when it can be recertified. The words "replace", "repair", and "re-install" should be used carefully. "Replace" means the use of a different/new component, while "re-install" indicates the use of the previously installed component, whether repaired or not. "Repair" indicates that some refurbishment, other than mere disassembly and/or cleaning, was performed.

(11) Associated supporting documents such as Nondestructive Testing (NDT) records, material certification, test data, etc., will be specifically identified and referenced on the MCR/REC.

(12) When it becomes necessary for an FMA to re-enter a certified component (periscopes, Auxiliary Sea Water pumps, Electronic Warfare Support Measures masts) which will not be returned to the ship from which it was removed, or when a component is re-entered when the ship on which it will be installed is not present, the FMA will control the work and document

the re-entry using a QA form 9, MCR/REC. The MCR/REC will be initiated and closed out by the FMA. A copy of the completed MCR/REC will accompany the component when it is installed in a certified SUBSAFE submarine or shipped to another activity as proof of certification. These controls are required whether the certified component is to be installed in a SUBSAFE certified ship or stored. Each component must retain its certification. These RECs are separate from and in addition to any MCR/REC required for removal of a component from SUBSAFE system and are only necessary whenever the original component will not be returned during the current availability to the ship from which it was removed.

(13) The CWP/REC Log, QA form 11 will be established and maintained by the QAO in accordance with the detailed instructions for QA form 11 in Part I, Chapter 11 of this volume. The QA form 11 shall be reviewed by the QAO to verify all MCR/RECs are closed prior to submerged operations. The FMA QAO will maintain a log for the FMA only and one for each tended ship RECs. The QA form 11 shall be reviewed by the FMA QAO to verify all FMA MCR/RECs are closed prior to underway operations of each tended ship.

(14) Revisions to the MCR/REC are required for the following:

(a) Change in work boundaries (e.g., breaking additional or new mechanical joints not previously identified on the MCR/REC). A REC revision is not required to delete undisturbed joints. Deletion of joints must be authorized by cognizant technical authority and documented in the REC package. Block 13 must be annotated to reflect joint deletions prior to signing REC Block 16.

(b) Change in NDT or test requirements (e.g., "J" vice H hydrostatic test, when "H" was originally specified). This does not include a DFS for unaccomplished testing. A REC revision is not required for NDT incidental to minor repairs as defined in paragraph 5.10.4.b.(15) (d) below. NDT results must be documented in the REC package.

(c) Scope of work changes (e.g., originally replace software changed to weld repair sealing surfaces, originally replace software changed to metallic pressure boundary part replacement).

(d) The REC does not require revision in order to conduct minor repairs in support of the original scope of work. These minor repairs must be authorized by cognizant authority and documented in the REC package, with appropriate OQE generated and added to Block 15 prior to the signing of Block 16 of the QA form 9. Hot work is not classified as a minor repair. Minor repairs authorized to be performed without a revision are:

1 Minor machining such that the machining is within the limits of the technical drawing, MS, or technical manual (e.g., taking a skim cut on an O-Ring groove such that the final machined dimensions are within the tolerances of the technical reference).

2 Epoxy repairs.

3 Electroplate repairs.

4 Preventive coating application.

(15) A revision cannot be used when a new MCR/REC is required (e.g., different system must be entered to conduct repair).

(16) REC Cancellation and REC Administrative Closeout. In the event a CWP is prepared and the job is planned to be accomplished but for some reason it was cancelled or deferred the following actions should be taken:

(a) If work was authorized to start, the CWP/REC must be revised to reflect that no work was accomplished and the REC was revised to close administratively. The QA form 11 log will be annotated that the job was "Cancelled".

(b) If work was not authorized to start, and the job has been cancelled, annotate the remaining blocks of the QA form 9 with NA and note that the REC was cancelled and no work was accomplished. Blocks 19 and 20 will be signed to formally close the REC. If the REC was prepared by a Repair Facility, a copy of the QA form 9 will be provided to the tended unit with the Certification Continuity Letter. QA form 11 log will be annotated that the job was "Cancelled".

(c) If work was not authorized to start and the job has been deferred to a future maintenance period, the REC is not required to be cancelled. The QA form 11 log will be annotated as "Deferred". This is not considered an open REC.

(17) Prior to every underway for submerged operations, all SUBSAFE RECs shall be closed. Commanding Officers of submarines will submit to Immediate Superior In Command (ISIC) a written report in accordance with paragraph 5.10.8 of this chapter. SUBSAFE certification letter is only required after an inport period in which SUBSAFE work was performed.

(18) Ship's Force is responsible for providing "Buddy" SUBSAFE REC serial numbers to outside repair activities performing SUBSAFE work on shipboard SUBSAFE systems. The Buddy REC number is issued from ship's QA-11 log and will be documented on repair activities SUBSAFE/RE-ENTRY CONTROL FORM. The use of the Ship's Force Buddy REC number is NOT required for Chief of Naval Operations/TYCOM scheduled availabilities. The issue of the Ship's Force Buddy REC is an administrative tool to make REC Log keeping easier and ensure the required certification letters are received prior to underway. The Ship's Force Buddy REC does not result in a Ship's Force REC Form, does not require Ship's Force Record Retention and does not allow Ship's Force to participate in the assigned activities work or certification process, except performance of testing. Ship's Force will only issue Buddy RECs to SUBSAFE certified activities performing SUBSAFE Work.

5.10.5 Using a Controlled Dive Departure from Specification to Close a Maintenance Certification Record/Re-Entry Control. If a MCR/REC is closed by transferring at sea testing to a DFS (e.g., controlled dive to test depth for retest of a periscope hull gland, controlled dive for retest of a sea connected system in lieu of joint tightness test to "J" pressure of Test Pressure Drawing (TPD)), the ship will be restricted, as required by reference (t), as follows:

NOTE: IF AN UNSATISFACTORY CONDITION OR SEAWATER LEAKAGE IN EXCESS OF THE SPECIFICATION IS FOUND DURING THE CONDUCT OF THE CONTROLLED DIVE TO TEST DEPTH, THE SHIP SHALL CONTINUE TO TEST DEPTH UNLESS THE COMMANDING OFFICER DETERMINES IT APPROPRIATE TO ABORT THE DIVE.

a. Except for the controlled dive to test depth to retest the system/component, ship's depth will be limited to one half test depth plus fifty feet until satisfactory completion of inspections during the controlled dive. The ship will stay at test depth for the time required as detailed in the normal retest procedure (i.e., 30 minutes if the normal joint tightness test is for 30 minutes) plus adequate time to permit inspections.

b. If inspections of the system/component during the controlled dive are satisfactory, the ship is released for UROs with no immediate report required. Clearance of the DFS will be reported as required by Part I, Chapter 8 of this volume.

c. If inspections of the system/component during the controlled dive are unsatisfactory, the ship is restricted to one-half test depth plus fifty feet as indicated in paragraph 5.10.5a. above, unless specific authorization is received from TYCOM approving URO or changing the depth restriction. An immediate report of unsatisfactory inspections will be made to ISIC and, if required, a request, including Commanding Officer's evaluation of unsatisfactory conditions and justification for request, for approval to conduct operations at depths deeper than one half test depth plus fifty feet will be made to TYCOM with information copy to ISIC and NAVSEA (07T). Deficiencies discovered that are not joints specified for inspection in the MCR/REC and DFS are dispositioned as required by Part I, Chapter 8 of this volume and are not cause for depth restrictions unless the Commanding Officer deems necessary.

d. Should the presence of an installed Dry Deck Shelter or Advanced Seal Delivery System preclude a component requiring deep dive testing from seeing submergence pressure, the requirements of paragraph 5.10.5a. of this chapter shall apply upon removal of the Dry Deck Shelter/Advanced Seal Delivery System, and shall be so annotated in the approval comments of the deep dive DFS.

5.10.6 Voyage or At Sea Repairs. If emergent repairs or at-sea repairs involve REC work, the ship is limited to 200 feet or less until the ship's Commanding Officer has signed for the closed REC.

a. If equipment malfunctions (except for casualties affecting recoverability, salvage, watertight integrity, or operation of ship's control surfaces), or seawater leakage in excess of the specification is found during the conduct of the initial tightness dive or the controlled dive to test depth, the ship should continue to the required depth and execute the sea trial agenda unless the Commanding Officer determines it appropriate to abort the dive. The Commanding Officer should be particularly circumspect in the case of leakage locations not isolable by flood control/other closures (e.g., electrical hull penetrators, periscope hoist rods, etc.).

b. Following completion of the initial tightness dive and the controlled dive to test depth, SUBSAFE deficiencies which result in seawater leakage exceeding the specification for acceptance shall be reported to the TYCOM, NAVSEA and info to all concerned.

c. If leakage is from an unisolable joint, ship's depth will be limited to 1/2 test depth plus 50 feet until approval from the TYCOM is received to continue trials at depths greater than 1/2 test depth plus 50 feet.

5.10.7 Exceptions to Re-Entry Control. Table 5-14 of this chapter includes certain systems and equipment within the certified SUBSAFE boundary which require frequent entry into the certified boundary for routine operations or maintenance actions in order to enable the ship to carry out its mission. The operational requirements for these systems and equipment have been reviewed. Inherent operational controls in the present system are considered adequate and the below listed items are considered safe exceptions to the formalized REC system. The operational control which is considered as meeting the intent of the REC requirements is listed beside each item and must be in effect in order to use the exception. Some REC exceptions permit removal of material from the installed system to perform maintenance or testing. The original material must be reinstalled or a complete REC (controlled work package) must be used to capture the installation of new Level I material and/or certification testing for new material.

NOTE: MCR/REC EXCEPTIONS ARE FOR SHIP'S FORCE USE ONLY AND ARE NOT AUTHORIZED FOR USE BY REPAIR ACTIVITIES. REPAIR ACTIVITIES SHALL NOT REQUEST THE SHIP TO INVOKE A REC EXCEPTION IN CONJUNCTION WITH REPAIR ACTIVITY WORK.

NOTE: REC EXCEPTIONS ARE NOT AUTHORIZED TO BE USED FOR THE INSTALLATION OF NEW LEVEL I HARDWARE WITHIN THE SUBSAFE BOUNDARY.

Table 5-14 Re-Entry Control Exception List (SUBSAFE)

REC EXCEPTION ITEM	OPERATIONAL CONTROL REQUIREMENT	RECERTIFICATION TESTING
Operation of access hatches and watertight doors	Ship's operating instructions (Note 1)	None
Operation of trash disposal unit	Ship's operating instructions (Note 1)	None
Streaming and retrieving the floating wire antenna	Ship's operating instructions (Note 1)	None
Normal loading/unloading of signal ejector/launcher and hand ram operations	Ship's operating instructions (Note 1)	None
Operating of shore services trunk and hook-up and disconnect of shore power, including removal and replacement of shore power covers	Ship's operating instructions (Note 1)	None
Normal operation of torpedo tube system	Ship's operating instructions (Note 1)	None
Entry into Auxiliary Tanks modified for storage (Does not include changing tank from wet to dry or vice versa)	Ship's operating instructions (Note 1)	None
Streaming and retrieving of towed array sonar systems	Ship's operating instructions (Note 1)	None
Operation of dry sonar sphere access hatch	Ship's operating instructions (Note 1)	None
Removal of MS plugs (9/16" and smaller) including test fittings for gauge test/hydro	Controlled assembly (Notes 2 and 3)	Note 4
Removal of and re-installation external salvage pipe cap	Controlled assembly (Notes 2 and 3)	None
Operation of Electronic Warfare Support Measure nitrogen purge lines	Operation by qualified FMA Electronic Warfare Support Measure repair personnel	None
Operation of periscope gassing valve	Operation by qualified FMA periscope personnel	None
Cleaning Sea Water Injection Strainers	Controlled assembly (Notes 2 and 3)	None
Main closure regreasing on MOD 25 MSW pumps, SSN 21 and SSN 774 Class Sea Water Pumps	Controlled assembly (Notes 2 and 3)	None
Removal and re-installation of Advanced Seal Delivery System nitrogen system caps	FWP, Controlled assembly (Notes 2 and 3)	None
Fresh Water Flushing of Towed Array Handling System Valve/Seal Assembly	FWP, Controlled assembly (Notes 2 and 3)	None
Removal and Reinstallation of the special test plug from MSW and ASW hull and backup valve body access covers	FWP, Controlled assembly (Notes 2 and 3)	None
Cleaning Sea Water Cyclone Separator	FWP, Controlled assembly (Notes 2 and 3)	None

Notes:

(1) Ship's operating instructions are procedures approved and signed by the Commanding Officer, or for SSN 688 and later classes of submarines, procedures promulgated in the Ship Systems Manual and Steam and Electric Plant Manual.

(2) An FWP in accordance with Part I, Chapter 2 of this volume, (e.g., PMS MRC, technical manual pages, detailed maintenance outline), will be used to control and document all work performed as a REC exception.

(3) Controlled assembly requirements are:

(a) Verification that surface finishes of gasket/o-ring sealing surfaces are in accordance with applicable specifications.

(b) Verification that fastener material and installation is in accordance with applicable specifications.

(c) Verification that gaskets/o-rings are properly installed and in accordance with applicable specifications.

(d) Assembly is documented on a QA form 34.

(e) Inspected by a Quality Assurance Inspector (QAI) or Quality Assurance Supervisor.

(4) The re-certification test is an operational test to system operating pressure.

NOTE: EXCEPTIONS FROM REC OTHER THAN THOSE LISTED ABOVE ARE NOT AUTHORIZED.

5.10.8 Certification Continuity Report. In order to ensure continued certification of each submarine, periodic reports are required as follows:

a. Prior to each underway for submerged operations, all SUBSAFE RECs shall be closed. Commanding Officers of submarines will submit to ISIC (deployed ISIC, if deployed), a written certification continuity report, which addresses the status of Ship's Force SUBSAFE/Submarine Flight Critical Component (SFCC) CWP, testing of SUBSAFE/FBW SCS systems, URO maintenance completed and RECs closed by transferring actions to a DFS. Appendix B provides the minimum requirements for the letter. If no SUBSAFE/SFCC controlled work, testing or URO MRCs were accomplished, no report is required.

b. Prior to the ship's underway after an FMA availability, refit or inport period when SUBSAFE/SFCC work was performed, the FMA Commanding Officer will issue a letter report to each tended submarine, with a copy to parent ISIC, which addresses the status of SUBSAFE/SFCC CWPs, testing of SUBSAFE/FBW SCS systems, URO maintenance requirements completed and SUBSAFE non-conformances (i.e., DFS and LAR). Appendix C provides the minimum requirements for the letter.

c. Prior to ship's underway, activities other than FMAs which perform SUBSAFE/SFCC maintenance on submarines will issue a letter report to the submarine with a copy to the parent ISIC, certifying that the maintenance performed meets the requirements of applicable specifications invoked by the governing document (e.g., unscheduled availabilities, contract) and the Memorandum of Agreement. Appendix D provides the minimum requirements for the letter.

5.11 REACTOR PLANT WORK ACCOMPLISHMENT REPORT (SUBMARINES ONLY).

5.11.1 Purpose.

a. The RPWAR form is a listing of those pipe and components of the reactor plant which are SUBSAFE. It is specific for each ship and is provided by the Reactor Plant Planning Yard via the TYCOM. The RPWAR consists of:

(1) Status sheet.

(2) Cover sheet.

(3) RPWAR Master Pages.

(4) Addendum Sheet.

(5) RPWAR general notes.

b. The reactor plant hull integrity area is comprised of those items on the RPWAR. Each ship must maintain the RPWAR current. Each completed RPWAR will be filed in an auditable manner along with the latest revision for the ship of the NAVSEA RPWAR status drawing. The reproducible blank RPWAR will be maintained in the same file. The ship will reproduce blanks as necessary to support reactor plant work.

c. To properly complete the RPWAR, the preparer must review the general notes of the applicable RPWAR and the instructions in reference (e).

d. To certify (or recertify) a nuclear SUBSAFE item, a RPWAR must be completed by the activity performing the maintenance (ship, FMA or shipyard) in accordance with reference (e) and forwarded as soon as possible to the Reactor Plant Planning Yard with copies to NAVSEA 08, TYCOM, ISIC and the ship. The RPWAR is to be signed in ink and the signed in ink copy should be forwarded to the Reactor Plant Planning Yard. Initials or typed signatures are not permitted. When work is complete, submit only those pages of the RPWAR line items that certify the work accomplished.

e. The RPWAR does not, in any way, relieve the FMA or ship of its responsibility to comply with all applicable requirements specified in technical manuals, plans, and other NAVSEA documents.

f. When the FMA works in an area covered by the RPWAR, the ship's Engineer Officer will provide the FMA with a reproduced RPWAR with the number filled in, notes, applicable certification forms and addenda sheet.

g. Instructions contained in this section are in amplification of those included in reference (e) and the RPWAR drawing itself.

5.11.2 Specific Instructions for Completing Reactor Plant Work Accomplishment Report Cover Sheet.

a. The ship's hull number must be specified in the space provided (if not already pre-printed).

b. The reporting activity (ship, FMA or shipyard) must be listed.

c. The report number must be included. The report number is the next consecutive number to that indicated on the latest completed RPWAR held by the ship.

d. The report must be dated.

e. The applicable block specifying when the work was accomplished must be checked.

f. The signatures and titles of the personnel preparing, reviewing, and approving the RPWAR must be included. Each RPWAR submitted by ships is prepared by the Lead Work Center QAI, reviewed by the QAO and Engineer Officer, and approved by the Commanding Officer. Each RPWAR submitted by an FMA is prepared by the nuclear Planning and Estimating Work Center (10D), reviewed by the Nuclear Repair Officer and QAO, and approved by the Repair Officer.

5.11.3 Specific Instructions for Completing Reactor Plant Certification When New or Previously Uncertified Material is Installed in a Submarine Safety Application.

a. The applicable revision of the drawing or plan must be referenced in the "DWG. NO. AND REV" block for each item worked on.

NOTE: IF A DRAWING OR PLAN OTHER THAN THAT REFERENCED IN THE "DWG. NO. AND REV" BLOCK IS USED BY THE REPORTING ACTIVITY, THE ACTUAL DRAWING OR PLAN USED SHOULD BE SPECIFIED IN EITHER THE "REMARKS" BLOCK OR ON THE ADDENDA SHEET AS A REFERENCED NOTE. THE REASON FOR USING A DIFFERENT DRAWING OR PLAN SHOULD ALSO BE SPECIFIED.

b. The identification of the reporting activity's detailed record should be entered in the "DETAILED RECORD IDENTIFICATION" block if the inspections required by the applicable inspection category were performed by the reporting activity (ship or FMA).

NOTE: THE RECORD RETAINING ACTIVITY, IF OTHER THAN THE REPORTING ACTIVITY, SHOULD BE IDENTIFIED IN THIS BLOCK.

c. Where sufficient space does not exist for entry of information, refer to the addenda sheet in the "REMARKS" block and enter the required information on the addenda sheet.

d. The report number will be entered in "REMARKS" block for each line item worked on by the reporting activity.

e. The signature block must be completed, indicating that the corresponding line item work has been satisfactorily completed and that records substantiating this are on file.

f. Where SUBSAFE work is accomplished in accordance with an Alteration, the reporting activity will reference, for each work item, the applicable Alteration with revision number in the "REMARKS" block.

g. Waiver, if any, previously granted for each item must be identified, including reference to the NAVSEA approval letter.

NOTE: IF THE WORK PERFORMED ON THE SUBSAFE ITEM IS SUCH THAT THE PREVIOUS CERTIFICATION IS VOIDED (SUCH AS REPLACEMENT OF A SUBSAFE VALVE TAILPIECE), THE REPAIRED OR ALTERED ITEM MUST BE CERTIFIED AS NEW MATERIAL.

5.11.4 Specific Instructions for Completing Reactor Plant Certification When Previously Certified Material is Reinstalled.

a. Reinstallation of previously certified material does not require a RPWAR unless specifically called out as a line item on the RPWAR requiring torque or installation verification.

b. The fastener torque sheet is filled out as follows:

(1) The inspection document is the QA form 34, the FWP or CWP serial number and job sequence number.

(2) The signature block is signed by the QAI who verified the torque.

(3) If sufficient space is not available in the QA form 34, the addenda sheet should be used with the appropriate line item listed.

5.12 MATERIAL CONDITION MONITORING (SUBMARINES ONLY).

5.12.1 Unrestricted Operations Maintenance Requirement Card Program.

a. The URO MRC program provides the minimum material condition requirements for URO to design test depth, with an established periodicity to accomplish. It is one of the programs required to maintain SUBSAFE certification. Accomplishment of the URO MRC will identify changes within the SUBSAFE or hull integrity boundaries of the ship, which result from the degradation caused by the service environment.

b. Administration, scheduling and reporting of the URO MRC program will be in accordance with the requirements of Chapter 25, Volume VI of this manual. A summary of URO MRC status will be reported by the submarine Commanding Officer in accordance with paragraph 5.10.8 of this chapter.

c. When performing corrective maintenance the following guidance is provided with regard to URO MRC:

(1) When performing corrective maintenance, associated URO MRCs should be reviewed to determine if the URO MRCs should be accomplished concurrently ahead of scheduled periodicity to preclude having to disassemble equipment again to accomplish the URO MRCs. Ship's schedule or FMA resources may preclude concurrent, early accomplishment of URO MRCs.

(2) If URO MRC criteria are used, in total or in part, during corrective maintenance, and a measured parameter is found out of tolerance and not restored, a major DFS must be submitted, in accordance with Part I, Chapter 8 of this volume, even though the periodicity of the URO MRC has not expired.

(3) When performing corrective maintenance that does affect a URO MRC measured parameter, perform that portion of the applicable URO MRC. A URO MRC measured parameter is any parameter that is documented on the Data Report Form during the performance of the URO MRC. The following are examples of corrective maintenance that may affect a URO MRC measured parameter:

(a) When the retest of the corrective maintenance is a documented URO MRC measured parameter (i.e., Emergency Flood Control Accumulator Tightness Test - URO MRC 026).

(b) When maintenance (such as opening mechanical joints or replacing hardware, adjustments, tests) affects the operation of a system inspected/tested by a URO MRC (i.e., Emergency Flood Control - URO MRC 025).

d. Following installation of an alteration (Ship Alteration (SHIPALT), Alteration and Improvement, Temporary Alteration) that modifies the structure of the Ship, such that access to vital equipment is or may be impacted, the Ship shall evaluate the need to perform URO MRC 029. If access to vital equipment could be restricted, the Ship shall perform URO MRC 029 and provide a copy to the installing activity and the ISIC. Partial accomplishment of URO MRC 029 is acceptable if appropriate for the alteration. If partial accomplishment of the URO MRC is performed, provide a copy to the installing activity and the ISIC. If the complete URO MRC is accomplished, provide a copy to normal distribution.

5.13 SUBMARINE FLY-BY-WIRE MAINTENANCE CERTIFICATION.

5.13.1 Purpose. To promulgate the policy and procedure for:

a. Maintaining continuity of the FBW SCS certification during the operating cycle.

b. General Maintenance Certification Record administrative requirements.

5.13.1.1 General.

a. Reference (w) establishes the FBW SCS certification criteria which must be accomplished on all applicable submarines in order to maintain system certification throughout the operating cycle of the ship. Once a submarine FBW SCS has been certified for unrestricted use or is accepted by the shipbuilder, all work within the SFCC Boundary and testing to support that work shall be accomplished, controlled, and documented in accordance with reference (w).

b. All other Performance testing within the FBW SCS Boundary, for work within the FBW SCS Boundary shall be accomplished to support system certification and documented using the activity's normal work control processes.

c. Work is defined as an action that actually or potentially changes (including disassembly and testing) the approved configuration of any part of the FBW SCS or SFCC Boundaries.

d. The objective of this work control process for work within the SFCC Boundary is to provide maximum confidence that any work and all applicable testing is authorized, controlled, identifiable, and auditable. It provides positive assurance that all SFCC equipment and FBW SCS is restored and tested to a fully certified condition.

5.13.1.2 Applicability. The requirements in this section shall apply to SEAWOLF and VIRGINIA Class Submarine FBW SCSs.

5.13.1.3 Submarine Flight Critical Component Boundary. The Submarine FBW SCS Boundary shall consist of electronic hardware and software within the submarine FBW Boundary (see reference (x)) that process safety critical functions and data elements.

a. Safety critical electronic components within the SFCC Boundary shall be determined per references (w) and (x) and shall be identified as SFCCs.

b. Safety critical software units within the SFCC Boundary shall be determined per references (w) and (x). Safety critical software units shall require additional testing and/or analysis, be marked, configuration managed, and controlled per the requirements in reference (w).

5.13.2 Submarine Flight Critical Component Boundary Work Control Procedures.

a. All fleet activities, In-Service Engineering Activity, repair activities or shipyards (public or private) must use CWPs, Task Group Instructions (TGI), or ripouts to document the accomplishment of work within the SFCC Boundary. CWPs/TGIs/ripouts shall provide greater assurance that any work accomplished is authorized, documented and executed in accordance with specifications and requirements, and is supported by OQE.

b. Work control documents shall be clearly marked as SFCC for auditing purposes.

c. Closed TGIs/CWPs/ripouts shall be retained by the work accomplishing activity and are subject to audit by cognizant activities (TYCOM, ISIC, shipyard, supervising authority or NAVSEA) during audits such as functional or certification audits.

5.13.3 Submarine Flight Critical Component Boundary Work Control Closeout.

a. All CWPs/TGIs/ripouts for work in the SFCC Boundary shall be closed prior to the system being released for unrestricted use/Fast Cruise/Sea Trials. As part of the work control procedure closeout process, CWPs/TGIs/ripouts shall receive an independent review within the activity performing the work to verify:

(1) Work was authorized and approved.

(2) Work stayed within the authorized boundaries.

(3) Post work/maintenance testing was accomplished satisfactorily.

(4) Appropriate Quality Assurance Forms are included to document Certification of Maintenance, and all forms are completed with required signatures.

b. All testing of the FBW SCS Boundary shall be verified closed prior to the system being released for unrestricted use/Fast Cruise/Sea Trials.

c. As a policy, CWPs/TGIs/ripouts for work within the SFCC Boundary or test documents within the FBW SCS Boundary shall not be closed out until resolution of all actions necessary to verify certification has been maintained when any breach of the boundary has occurred. An acceptable alternative, however, is to close out a CWP/TGI/ripout or test documents within the FBW SCS Boundary by transferring remaining at sea testing actions to a separate auditable accountability system (e.g., Sea Trial Agenda). All CWPs/TGIs/ripouts closed in this manner shall be annotated by the activity with the reference documents that contained the transfer actions. This policy shall be verified by the activity accomplishing the work, supervising authority, submarine Commanding Officer and ISIC.

d. Prior to each underway for submerged operations, Commanding Officers of FBW SCS submarines will submit to ISIC (deployed ISIC, if deployed), a written certification continuity report, which addresses the status of Ship's Force FBW SCS CWP, testing of FBW SCS, URO maintenance requirements in the format of Appendix B. If no FBW SCS controlled work or testing were accomplished, no report is required.

5.13.4 Objective Quality Evidence to Support Controlled Work on Fly-By-Wire Ship Control System Submarine Flight Critical Component. To standardize maintenance OQE, the following section provides guidance on the key elements needed to be documented to certify the work process, whether routine maintenance, major repairs, system upgrades or alterations. This section lists applicable key source documents OQE requirements including additional attributes to be included as part of the SFCC Boundary work control process. This information should be used as follows:

a. Activities performing work on FBW SCS within the SFCC Boundary should use this information, along with source documents, as a guide in developing OQE records that document work, inspections and tests performed within the SFCC Boundary.

b. The elements listed are technical specifications and process documents required for a typical repair or system upgrade/alteration process.

c. If Upgrades/Alterations or Major Repair Work of the FBW SCS was performed, the ISIC will accomplish a 100% audit, as defined in Part I, Chapter 9 of this volume, of the work. ISIC and TYCOM will use the FBW message reporting process for certification specified in Volume II, Part I, Chapter 3 of this manual, for availabilities of less than six months duration.

5.14 AIRCRAFT CARRIER MAINTENANCE DOCUMENTS.

5.14.1 Purpose. The purpose of this section is to provide amplifying/clarifying information on the processes involved and appropriate use of specific aircraft carrier maintenance related documents. Including:

a. Request for Departure from Specification (DFS), Waivers or Deviation.

b. Nuclear Liaison Action Request (LAR).

c. Nuclear Liaison Inquiry (NLI).

d. Steam Plant Action Request (SPAR).

e. Steam Plant Liaison Inquiry (SPLI).

f. Reactor Plant Configuration Change Report (RPCCR).

g. Planned Maintenance System (PMS) Technical Feedback Reports (TFBR).

h. Tech Manual Deficiencies & Manual Change Requests.

i. Fleet Coordinated Shipboard Allowance List (COSAL) Feedback Reports.

5.14.2 Non-Nuclear Deviations, Waivers and Departure from Specifications. The terms "deviation" and "waiver" are often used synonymously. However, the principle difference is a deviation is requested prior to conducting work that will result in a non-conformance, where a waiver is requested after a non-conformance has been discovered. Requests for deviation and waivers shall be retained and tracked within the DFS system by Ship's Force and the ISIC/TYCOM until permanent documentation is confirmed to reflect the specific non-conforming condition. Use of the Web Based Electronic Departure from Specification or Electronic Waiver and Deviation programs facilitate meeting these requirements. A DFS (non-nuclear system/components only) is used specifically to identify a lack of compliance with plans, procedures, instructions, or authoritative documents during a maintenance action or operations.

5.14.2.1 During a Maintenance Action. A DFS is required for any lack of compliance with cognizant documents or drawings. For an "as found" condition during maintenance, the TYCOM, the ship and the Regional Maintenance Center (if involved) must evaluate the non-compliance using the guidance of paragraphs 8.2.4 and 8.2.5, of Part I, Chapter 8 of this volume to determine if the nonconforming condition meets the criteria as a Major or Minor DFS.

NOTE: IF THE SHIP IS AT SEA THE GUIDANCE OF PARAGRAPH 8.3.8 OF PART I, CHAPTER 8 OF THIS VOLUME APPLIES.

5.14.2.2 During Operations. A DFS is required for any lack of compliance with cognizant documents or drawings. For any "as found" conditions or equipment failures that result in a non-compliance, the ship (and/or TYCOM if in port) must evaluate the condition or failure using the guidance of paragraphs 8.2.4 and 8.2.5 of Part I, Chapter 8 of this volume to determine if the nonconforming condition meets the criteria as a Major or Minor DFS.

a. If the nonconforming condition does not meet the criteria as a Major or Minor DFS, no DFS is required and the nonconforming condition will be entered in the ship's Current Ship's Maintenance Project (CSMP).

b. If a DFS is required, the request should be processed as soon as possible to enable an engineering evaluation of the non-conformance and subsequent approval or disapproval issued without disrupting ship's operations.

c. Requests for DFS will be submitted, approved and cleared in accordance with paragraph 8.3.7 or 8.3.8 of Part I, Chapter 8 of this volume. Use of the Web Based Electronic Departure from Specification and Electronic Waiver and Deviation programs are acceptable unless directed otherwise by TYCOM.

d. If a DFS is approved as "temporary" and requires rework to correct the discrepant condition at a later date, a new CSMP entry for correction of the discrepant condition will be initiated by the ship. The ship's QAO shall ensure this action is accomplished.

e. The QAO shall verify that an active Job Control Number (JCN) exists for all active temporary DFSs at the completion of all scheduled maintenance availabilities or at least quarterly and shall ensure that an auditable record of such verification is maintained until superseded.

f. For all DFSs, deviations or waivers that have been adjudicated, the approving activity is required to provide a copy of the DFS, deviation or waiver to the ship's QAO for retention and tracking per Part I, Chapter 8, paragraph 8.3.1.e of this volume.

5.14.3 Liaison Action Requests – Nuclear Cognizant Areas.

5.14.3.1 Technical Responsibilites. A memorandum of agreement exists between NAVSEA Nuclear Propulsion Directorate (08) and NAVSEA PMS 312/335 that details the division of responsibilities within the propulsion plants of nuclear powered ships. If a nuclear powered ship is unable to comply with specifications for reactor plant systems or components and also those systems identified as nuclear by the appropriate nuclear/non-nuclear interface diagram, then a review of NAVSEA 08 requirements shall be requested via a LAR. A formal resolution of all LARs is generally required prior to reactor plant or propulsion plant startup.

5.14.3.2 Technical Resolution. In general, technical resolution to questions or problems for reactor plant systems or components requires the submission of a LAR for nuclear powered surface ships in accordance with the requirements set forth in Appendix 4 (Liaison Services) of reference (d).

a. Request for DFSs for nuclear systems will neither be requested nor approved. If a ship has a question, problem, or is unable to comply with any nuclear specification, a request for technical resolution will be made using a LAR.

b. A LAR should not be submitted for cases of out of specification seat leakage of nuclear valves following repairs. The Reactor Plant Planning Yard and Reactor Plant Prime Contractors do not have the authority to waive valve leakage specifications. When valve seat leakage exceeds reactor plant manual specification after attempted Ship's Force/FMA repairs, the guidance of Part I, Chapter 8, paragraph 8.4.2.c. of this volume may be used to defer any rework to a later date and close out the CWP.

c. A LAR is also never used for removing or reprogramming work, to or from, an Availability Work Package (AWP).

   (1) AWPs for Chief of Naval Operations availabilities are developed and/or changed in accordance with Section 5.1.1 and Appendix D or F of the Aircraft Carrier Class Maintenance Plan (ACCMP).

   (2) The ACCMP can be found on the Carrier Team One website under "Resources/Library".

d. An auditable LAR file shall be maintained by the originating activity. A copy of the status of all liaison actions LAR shall be kept as part of this file with a copy maintained in the applicable Controlled /Formal Work Procedure, as required.

5.14.4 Nuclear Liaison Inquiry – Nuclear Cognizant Areas.

NOTE: INFORMATION ON THIS SUBJECT IS SAFEGUARDED IN ACCORDANCE WITH NAVSEAINST C5511.32 AND IS CONTAINED IN PART II, CHAPTER 1 APPENDIX B OF THIS VOLUME.

APPENDIX E AND APPENDIX F APPEAR IN PART II, CHAPTER 1 OF THIS VOLUME AS ENCLOSURE (1) AND ENCLOSURE (2), RESPECTIVELY.

5.14.5 Steam Plant Action Request - Non-Nuclear Cognizant Areas. In 2003, the Propulsion Plant Engineering Activity (PPEA) was formed as an additional resource for assisting operational aircraft carriers with technical or operational issues, not associated with Ship Alteration Installation or configuration control. As with a LAR, if a ship or FMA has a question or technical problem or is unable to comply with a non-nuclear specification, technical assistance is available from the In-Service Carrier Engineering Team (CET). CET Liaison services are requested using the Steam Plant Action Request (SPAR) discussed in detail in Appendix 4 of reference (d).

5.14.5.1 Usage. SPARs requesting changes or deviations from specification shall not be submitted or approved by the CET. The SPAR is not a substitute for Requests for DFSs described in Part I, Chapter 8 of this volume.

a. The SPAR is not intended to replace:

   (1) The CSMP for work requests/candidates.

(2) TFBRs for discrepancies with the PMS System.

(3) Technical Manual Deficiency/Evaluation Reports (TMDER) or Manual Change Requests for identifying discrepancies in technical manuals.

(4) Reporting changes to ship's configuration as a result of the Navy Modernization Program.

b. A SPAR is also never used for removing or reprogramming work to or from an AWP.

c. AWPs for Chief of Naval Operations availabilities are developed in accordance with Section 5.1.1 and Appendix D or F of the ACCMP. The ACCMP can be found on the Carrier Team One website under the "Resources/Library" tab.

5.14.5.2 Submittal. The SPAR is designed to allow the fleet and maintenance activities to submit requests for technical assistance on non-Ship Alteration related issues. The CET will assist in providing solutions which satisfy specification requirements, supply a technical evaluation and basis for concurrence or non-concurrence with a deviation or proposed change. Where sufficient information is not available to resolve the problem, the CET may request additional information in a reply. Each SPAR will be categorized based on the type of action taken in the proposed reply.

5.14.5.3 Validation. Upon receipt of a SPAR, the PPEA makes a determination, with NAVSEA concurrence as needed, as to whether the SPAR is a valid request. Once validated, the PPEA will route the SPAR to the appropriate cognizant engineering activity for resolution. If the appropriate activity is not clear, i.e. in the case of overlapping areas of cognizance, NAVSEA 05V will determine which organization will provide resolution. SPAR responses meeting the criteria below, DO NOT require NAVSEA approval and the PPEA has the authority to provide a final resolution to the requesting activity.

a. The request concerns a PPEA cognizant system or component as defined in Enclosure (1) to PPEA-1.

b. The request does not change:

(1) Engineering System Diagrams.

(2) System diagram attributes, such as system design or performance characteristics, material, pipe size, etc.

(3) Steam Plant Manual.

(4) Component Procurement Specifications.

(5) Component Technical Requirement documents.

(6) Component technical manuals.

(7) System testing requirements.

(8) GSO requirements.

c. The request has no impact on Reactor Plant systems or components.

5.14.5.4 Categories. Actionable SPARs fall into one of four categories: Emergency, Urgent, Routine, and Date Needed By. Informational SPARs typically do not require a response. Emergency, Urgent, Routine and Date Needed By SPARs require an approved response delivered to the originator as follows:

a. Routine – within 20 business days.

b. Urgent – within 5 business days.

c. Emergency – within 1 business day (24 hours).

d. Date Needed by: Date specified by the originating activity to support upcoming evolutions or ship's schedule.

5.14.5.5 Coordination. Once a CVN SPAR response is developed, it is subsequently forwarded to NAVSEA 05V for approval. NAVSEA 05V1 coordinates the review and approval process for the various NAVSEA agencies. Any NAVSEA comments to the SPAR response are communicated directly to the responding activity during the approval process and then adjudicated. The approved SPAR response is returned to PPEA, who distributes the response to the ships and appropriate activities. The PPEA provides record retention services for all SPAR responses.

5.14.5.6 Routing. In addition to preparing SPAR responses, the PPEA is tasked as the Process Manager for both the SPAR and SPLI Programs. This involves dispositioning SPARs received, routing to the appropriate activity for resolution, routing of responses to NAVSEA for approval and distribution of approved responses to the requestor and other activities as appropriate.

5.14.5.7 Status. The EFORMS application maintains the status of all SPARs. This application includes the date the SPAR was received, the date the responding activity approved the response, the date the SPAR response was sent to NAVSEA, the current responsible party and current routing status. Reports listing all outstanding and completed SPARs for a desired time period can be retrieved from the application via the search engine function.

5.14.5.8 Software. Naval Sea Logistics Center is responsible for maintaining the EFORMS application that tracks SPAR status from receipt to completion, maintaining a historical file of completed SPARs, and having the ability to provide CET and PPEA management with meaningful statistics on SPAR processing.

5.14.5.9 Process Map. The PPEA SPAR Process Map is shown in detail in Figure 5-16 of this chapter.

5.14.6 Steam Plant Liaison Inquiry – Non-Nuclear Cognizant Areas. SPLIs are the Steam Plant equivalent of an NLI. SPLIs are used by the CET to request information, disseminate technical information associated with the Steam Plant, or direct work that does not require a drawing change or affect system configuration control, to the Fleet and overhaul activities. This document is intended to be a data collection tool only, and in general will not direct Forces Afloat to accomplish any repair, modification, or alteration to systems or components. Following NAVSEA approval, a SPLI is issued to the applicable TYCOM(s), who will forward the request to the appropriate ships via official letter. Each activity shall maintain an auditable file, containing all information associated with each incoming and outgoing (answered) inquiry. A SPLI may be necessary to obtain specific data and other information from Forces Afloat during development of SPAR responses and other CET products.

5.14.6.1 Process Manager. In addition to preparing SPLI's, the PPEA is tasked as the Process Manager for both the SPAR and SPLI Programs. Additionally, the PPEA is responsible for maintaining an SPLI log book/database and providing a historical file of completed SPLIs.

a. The PPEA is responsible for keeping track of SPLIs in routing for concurrence, SPLIs issued to the fleet for accomplishment and ensuring the log book is updated as SPLIs are completed.

b. The PPEA will route a copy of all SPLI responses received to the SPLI originator and other parties as applicable. If a SPLI request has exceeded the requested due date without the required response, the applicable CET representative shall contact the TYCOM to establish a revised due date. The final status of an SPLI shall be noted in the SPLI log book/database.

c. The status of outstanding SPLIs will be reported monthly. The activity's report will be maintained by the PPEA SPAR/SPLI Process Manager and will list only those SPLIs which require a response.

5.14.6.2 Amplifying Information. Amplifying information is provided in the NLI/SPLI Process Map (Figure 5-17 of this chapter).

5.14.7 Reactor Plant Configuration Change Report. RPCCRs (Figure 5-16) are used to report any and all changes to the configuration of any NAVSEA 08 cognizant space. This includes SHIPALTs, Ship Class Drawings, NLIs or any other form of authorized change. Addresses can be found in reference (d) or obtained through the TYCOM as needed.

a. Formal instructions for completion of RPCCRs is found in Appendix 11 of reference (d). Blocks 1 – 30 (31 if needed) must be filled out in accordance with the instructions found in Appendix 11.

b. Commanding Officers are directed to forward RPCCR(s) to NAVSEA 08 by official letter, similar to the sample in Appendix G of this chapter, using ship's letterhead with copies to the TYCOM, ANSTR Pittsburgh and A4W/A1G RPPY.

5.14.8 Preventive Maintenance System Feedback Reports. The PMS Feedback Reports (PMS FBR) (OPNAV form 4790.7B) of reference (y) is used specifically to notify Fleet Technical Support Center Atlantic (FTSCLANT)/Fleet Technical Support Center Pacific (FTSCPAC) of matters related to PMS. The FBR form is composed of an original and four copies. Instructions for preparation and submission of the form are printed on the back of the last copy. The PMS FBR and TFBR Process Map is shown in Figure 5-18 of this chapter.

a. While the FBR will provide initial PMS coverage and changes, submission of an OPNAV 4790/CK form is required to report configuration changes and changes in logistic support.

b. Automated forms for FBR submission may be transmitted electronically using:

(1) SKED Feedback Report Wizard (preferred).

(2) Fleet Technical Support Center website.

(3) Anchor Desk website.

5.14.8.1 Feedback Report Types. There are three types of FBRs: Category A, Category B, and Urgent.

a. Category A - non-technical in nature and intended to meet PMS needs which do not require technical review, including changes in Work Centers. Category A FBRs are submitted to request classified or other PMS documentation, which cannot be obtained locally.

b. Category B - technical in nature and are used to report technical discrepancies inhibiting PMS performance or shift of maintenance responsibilities.

c. Urgent – reason for submission involves safety of personnel, ship or potential for damage to equipment and relates to the technical requirements of PMS. Urgent FBRs will be forwarded by naval message, containing a PMS Feedback Serial Number, to both FTSCLANT and FTSCPAC with info to the cognizant System Command, Bureau of Medicine and Surgery, Naval Safety Center and TYCOM. The message shall describe the unsafe procedures or conditions and identify the specific Maintenance Index Page/MRC involved.

Figure 5-16 - PPEA SPAR Process Map

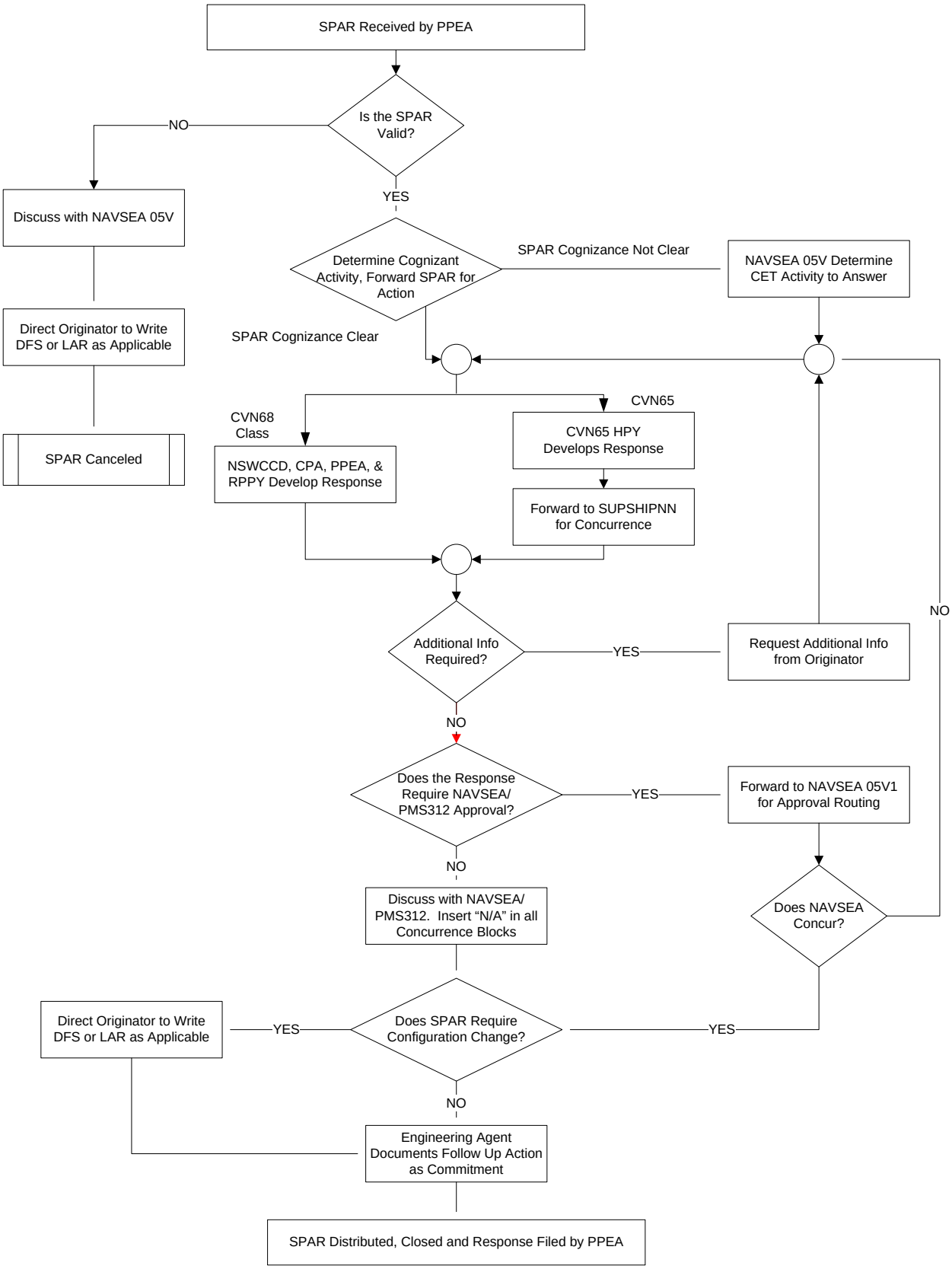

Figure 5-17 Overall NLI/SPLI Process Map

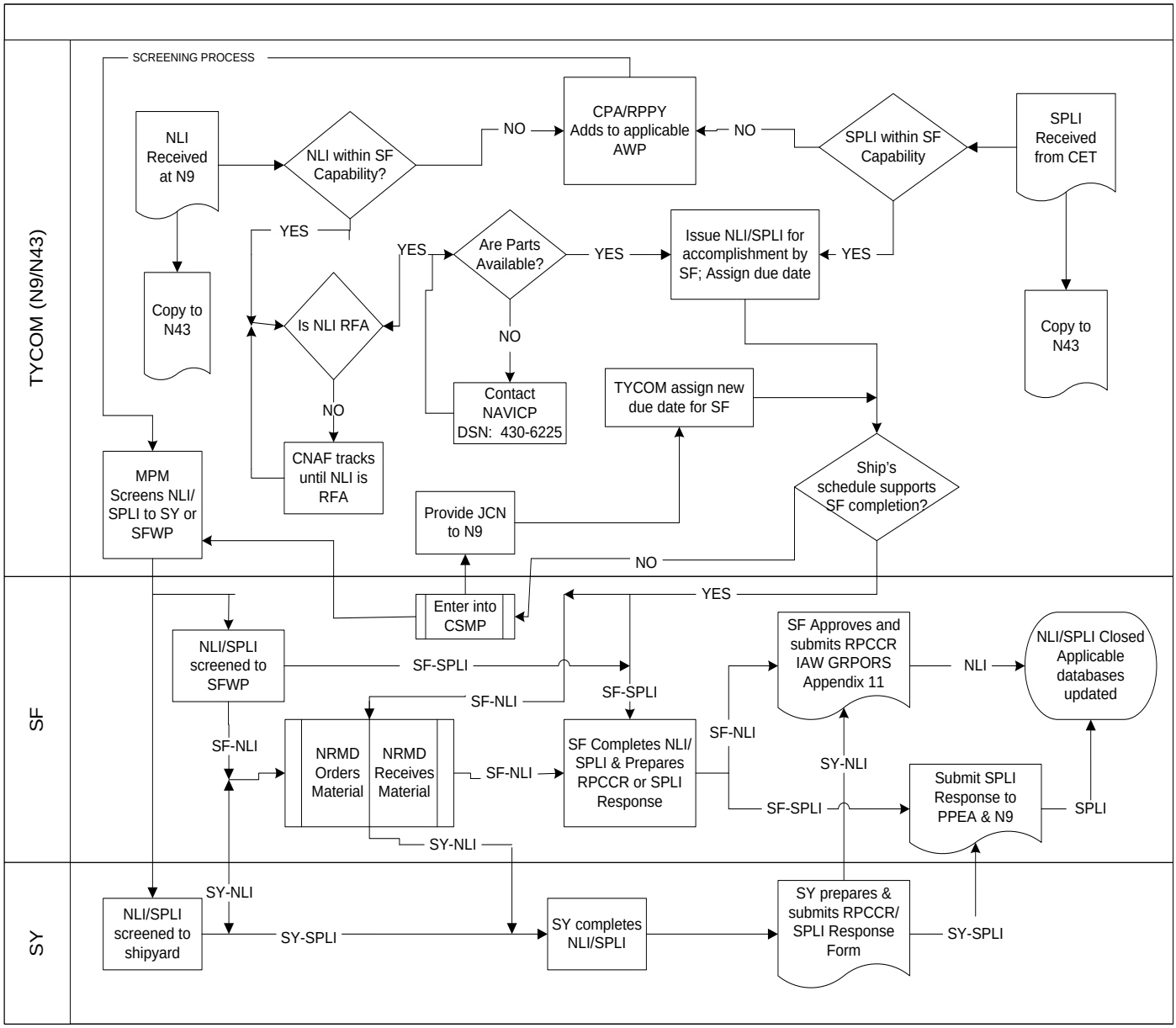

Figure 5-18 Technical Feedback Report (TFBR) Process Map

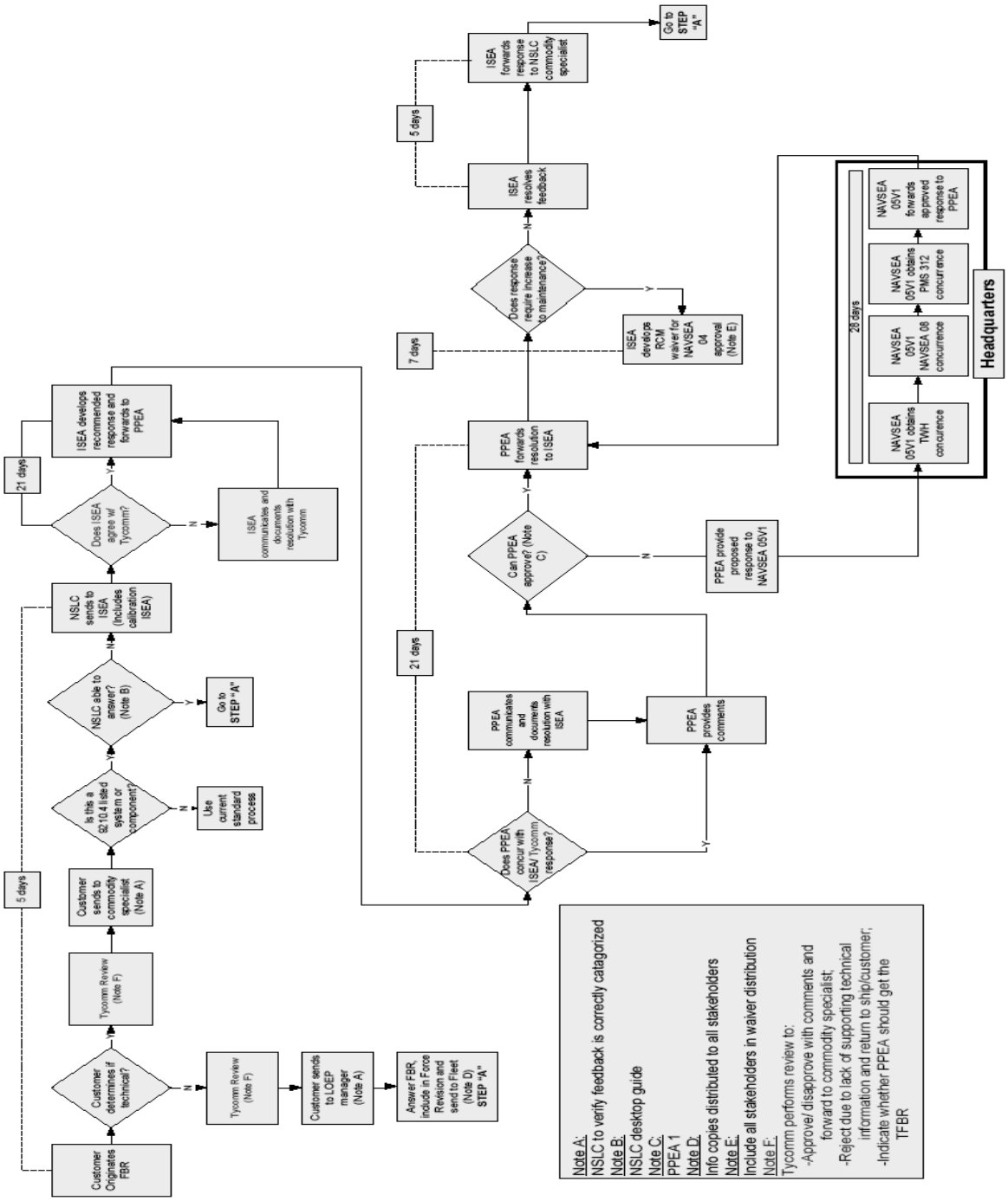

5.14.8.2 Feedback Report Screening. The ship's 3-M System Coordinator is responsible to screen all FBRs and serialize and forward within four days of receipt.

a. The 3-M System Coordinator shall maintain accountability for all PMS FBRs submitted and actions taken until corrected PMS documentation is received.

b. The 3-M System Coordinator shall also ensure that the originator and all applicable Work Centers are kept apprised of action taken and ensure the originating and other applicable Work Center Supervisors implement the changes or corrections when received.

(1) FTSCLANT/FTSCPAC are responsible to provide expeditious resolution to all FBR whenever possible.

(2) Where resolution by FTSCLANT/FTSCPAC is not possible, the FBR will be electronically forwarded to the cognizant Technical Review Activity for resolution.

5.14.9 Preventive Maintenance System Technical Feedback Reports. TFBRs are specifically used for reporting technical deficiencies or errors in PMS documents. Technical PMS discrepancies that could have a detrimental effect on personal safety, safety of ship or could result in significant equipment damage, are classified as "Urgent". All other TFBRs are classified as "Routine".

5.14.9.1 Preventive Maintenance System Coordinating Activities. The central control points for processing TFBRs are the Preventive Maintenance System Coordinating Activities (PMS CAs). Depending on the type and level of technical authority necessary to answer the TFBR, PMS CAs will either respond to the originator with a resolution, or forward the TFBR to the appropriate NAVSEA technical authority for action.

5.14.9.2 In-Service Engineering Activities. In-Service Engineering Activities (ISEA) are those activities designated by NAVSEA as the technical experts for specific systems and/or equipment. Naval Surface Warfare Center, Carderock Division, is the ISEA for the majority of Hull, Mechanical and Electrical equipment installed on most ships, outside of Nuclear cognizant areas.

5.14.9.3 Action Activities. Design Activities, ISEAs or other activities under the direction of the NAVSEA or other System Commands holding technical authority for systems and equipment, take all appropriate action on TFBRs under their cognizance and forward the response to the PMS CAs. The PMS CAs will record the TFBR result in the system and provide the final response to the originator.

5.14.10 Urgent Technical Feedback Reports.

a. Urgent TFBRs are those feedbacks reporting technical discrepancies that can result in personnel injury, risk to the safety of the ship or significant equipment damage.

b. PMS CAs shall provide a message response to all Urgent TFBRs within one (1) working day of receipt. If the TFBR is forwarded to a Design Activity or ISEA for resolution, then the Design Activity or ISEA shall provide a message response to all Urgent TFBRs informing the originator of specific actions and/or required changes that will result from the TFBR evaluation within one (1) working day of receipt. This message response shall be addressed to the originator and distributed to TYCOMs. TYCOMs will forward this message to all commands that could be affected by PMS change. The Urgent TFBR response message may recommend pen and ink changes to the affected PMS requirement.

c. PMS CAs shall distribute revised PMS documentation to all affected users within 30 calendar days from receipt, via special issue or Advance Change Notice.

5.14.11 Routine Technical Feeback Reports.

a. PMS CAs shall perform technical review, research and provide a response to routine TFBRs where resolution does not require technical authority action.

b. TFBRs that PMS CAs cannot resolve will be sent to the cognizant Design Activity or ISEA. The cognizant Design Activity or ISEA will provide the response to the appropriate PMS CA, describing the action taken. The PMS CAs will provide the response to the originator by electronic means.

c. Distribution of the revised MRC to the originator and other affected users will be accomplished via the next Force Revision.

d. NAVSEA has established a goal of providing answers to TFBRs in one day. While it is realized that some TFBRs will require more extensive research, the majority of TFBRs received can and should be answered in one day.

e. If no revision to PMS documentation is required, pertinent comments will be provided in the response to the appropriate PMS CA. When not concurring with the feedback report, the rational for the non-concurrence must be provided to the appropriate PMS CA.

5.14.12 Technical Manual Deficiencies and Manual Change Requests.

5.14.12.1 Technical Manual Maintenance. Technical Manuals (TM) must be maintained current at all times. TMs associated with hardware must reflect current hardware configurations. Changes to hardware accordingly, must be accompanied by changes or revisions to the TMs. TMs must also be changed or revised to correct known deficiencies in the technical content in instances not related to hardware modifications.

5.14.12.2 Technical Manual Deficiency/Evaluation Report. The TMDER, NAVSEA/Space and Naval Warfare Systems Command (SPAWAR) Form 4160/1, (Appendix H of this chapter) is used to identify technical and non-technical discrepancies/deficiencies (non nuclear cognizant) in NAVSEA or SPAWAR technical manuals. It may be that a paragraph or page is missing, that measurements or troubleshooting procedures are incorrect, a safety step is omitted, instructions are unclear or that the text or illustrations are not legible. Whatever the issue, it must be corrected. The TMDER is a quick and efficient tool for reporting problems with technical manuals that are used every day.

5.14.12.3 URGENT Deficiencies.

a. URGENT deficiencies should be reported to the Naval Systems Data Support Activity (NSDSA) by priority Naval Message addressed to:

Commander, Naval Surface Warfare Center (NSWC PHD)
Port Hueneme Division, Code 5E00,
4363 Missile Way,
Port Hueneme, CA 93043-4307

b. Via the web at http://nsdsa.phdnswc.navy.mil/tmder/tmder.htm .

c. For users with a Technical Data Management Information System (TDMIS) account, the most expedient manner of TMDER submission is via the TDMIS Web Site.

d. Unclassified TMDERs can be submitted from the TDMIS database via the “deficiency module”. This method is strongly encouraged. Instructions for each method are detailed below.

5.14.12.4 Routine Deficiencies.

a. Routine TM documentation deficiencies and concerns are reported via the web or using a paper TMDER. The paper form should be available in the back of any ship or NAVSEA/SPAWAR system tech manual. If not, a copy should be requisitioned.

b. Attach a copy of the TM title page and the marked-up pages (if available) to the TMDER and mail to Commander, Naval Surface Warfare Center, Port Hueneme Division at the address above or via the web at http://nsdsa.phdnswc.navy.mil/tmder/tmder.htm

c. Again, TDMIS users may submit routine TMDERs via the "deficiency module" of TDMIS. Attachments may be uploaded in TDMIS.

5.14.12.5 Technical Manual Deficiency/Evaluation Report Process. TMDERs are received at NSDSA, logged into the TMDER tracking module and provided to the Technical Manual Maintenance Activity (TMMA) for review and response. The TMMA shall:

a. Review, analyze and resolve TMDERs for all assigned TMs.

b. Determine the accuracy and criticality of a reported deficiency.

c. Inform the TMDER originator and update the deficiency data in the deficiency module of TDMIS: Urgent reports - 3 working days. Routine reports - 90 calendar days.

d. Prepare or procure Field Change Bulletins, change packages and revisions or prepare changes, to correct TMDER reported deficiencies, using the Rapid Action Change process.

e. Letters of response should include the appropriate status and shall be similar to the following:

(1) Your TMDER # _____ for TM # _____ has been received by this activity for action. We have determined that a change to the manual is required. A change package (or revision) is in work or work is planned to start this fiscal year. Distribution is scheduled on (Mo/Yr).

(2) Your TMDER # _____ for TM # _____ has been received by this activity for action. We have determined that a change to the manual is not required for the following reason(s):

(3) Your TMDER # _____ for TM # _____ has been received by this activity for action. We have determined that the deficiency reported will not impede the operation/maintenance of the equipment, and that it is not cost effective to prepare a change at this time. The deficiency will be considered for incorporation with the next change package or revision.

f. Notify NSDSA and the Acquisition Manager, TMDER originator or Designated Ship Program Management Office when a TMDER for the assigned TM cannot be reviewed, resolved, or TM updated. This notification can be completed via the on-line TMDER form in the TDMIS deficiency module.

5.14.13 Fleet COSAL Feedback Report.

5.14.13.1 Usage. This report is used specifically to call attention to and seek correction of any technical deficiencies found on Allowance Parts Lists (APL)/Allowance Equipment Lists (AEL), including those covered under P-OMMS. For example:

a. The part/item is not listed on the APL/AEL, but is considered to be a "maintenance significant item".

b. APL is incomplete or is missing information, such as characteristics data, technical manual number, etc.

c. Incorrect part/item listed on APL/AEL.

d. Allowed quantity insufficient for PMS requirements.

e. Part number in technical manual does not agree with APL.

f. Non-allowed part required for PMS.

g. APL technical problem such as incorrect Minimum Replacement Unit assignment.

h. Source, Maintenance and Recoverability Codes and Allowance Note Codes noted on APL/AEL are not defined in any publication held.

i. Suspected error in code assignments, e.g., Source, Maintenance and Recoverability Codes, Note Codes, etc.

j. Circuit symbol number in Electronics APL (Section B) crosses to incorrect reference number or stock number.

5.14.13.2 Misuse. This report is not to be used to:

a. Address any matters relating to Nuclear Reactor Plant COSAL ("Q" COSAL). Matters relating to Q-COSAL should be addressed by LAR through A4W RPPY

b. Report equipment configuration changes. Ship's Configuration Change Form, OPNAV Form 4790/CK, is to be used for this purpose. RPCCR for nuclear cognizant systems.

c. Request changes in allowance for repair parts or equipage. Use NAVSUP Form 1220-2, except in cases when the allowance problem is caused by technical deficiencies in the COSAL, such as incorrect Minimum Replacement Unit assignment, PMS requirement not reflected in Standard Navy Stock List/Installation Sequence List etc. See reference (z) for further details concerning this form.

5.14.13.3 Form Location. The Fleet COSAL Feedback Report form (Appendix I of this chapter) can be found at www.anchordesk.navy.mil under the fleet support section. Distribution of the form should be as follows:

a. Original to NAVSEALOGCEN Code N42.

b. Copy to Ship's Supply Officer.

c. Copy retained by Originator.

APPENDIX A

DETERMINING SOFTWARE USABILITY

EXPIRATION DATE ON PACKAGE
(SHELF LIFE MANAGED)

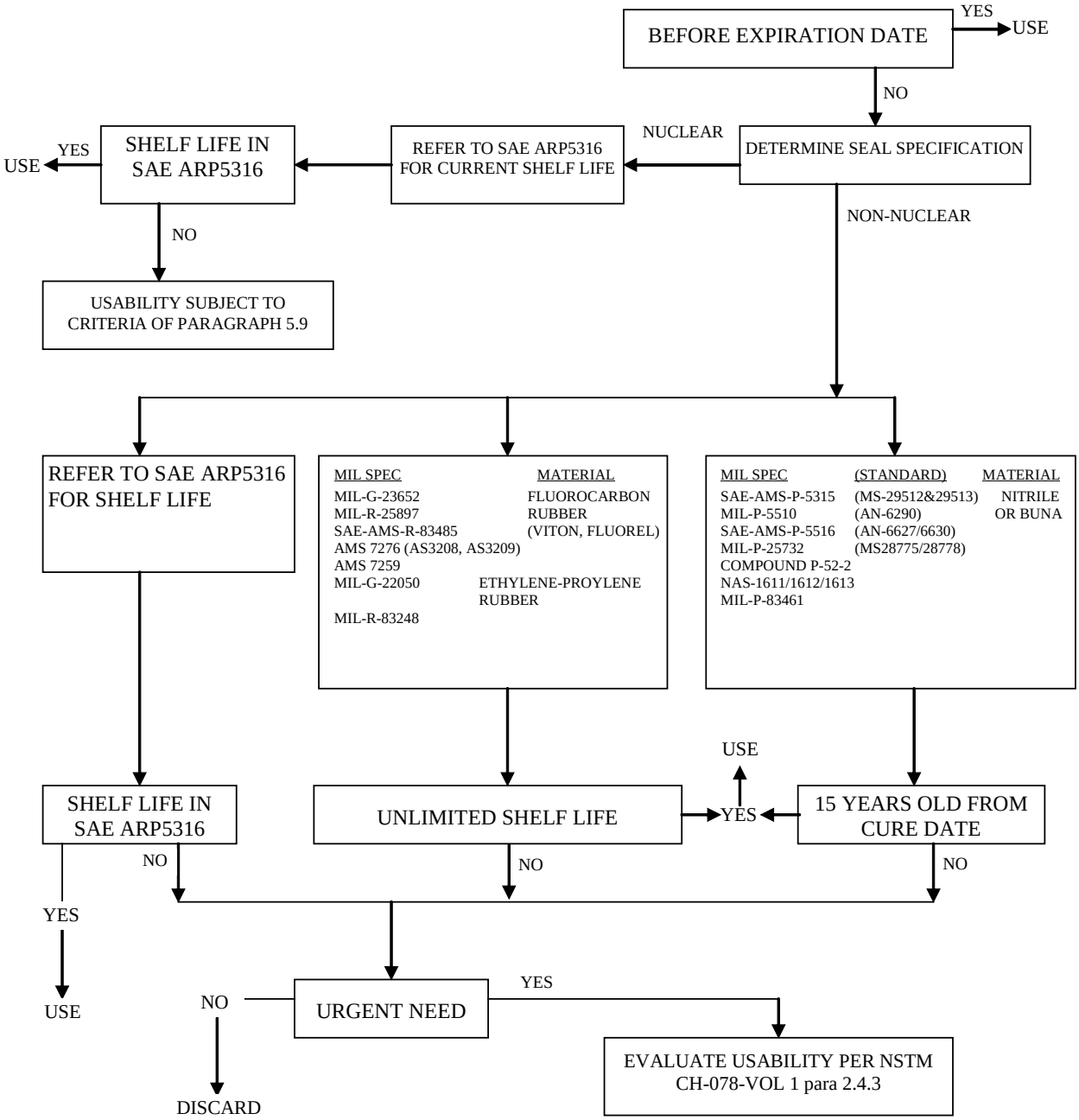

REFERENCES: NAVSEA S9086-CM-STM-010/CH78
NAVSEA 0989-037-2000

"USE BEFORE" DATE ON PACKAGE

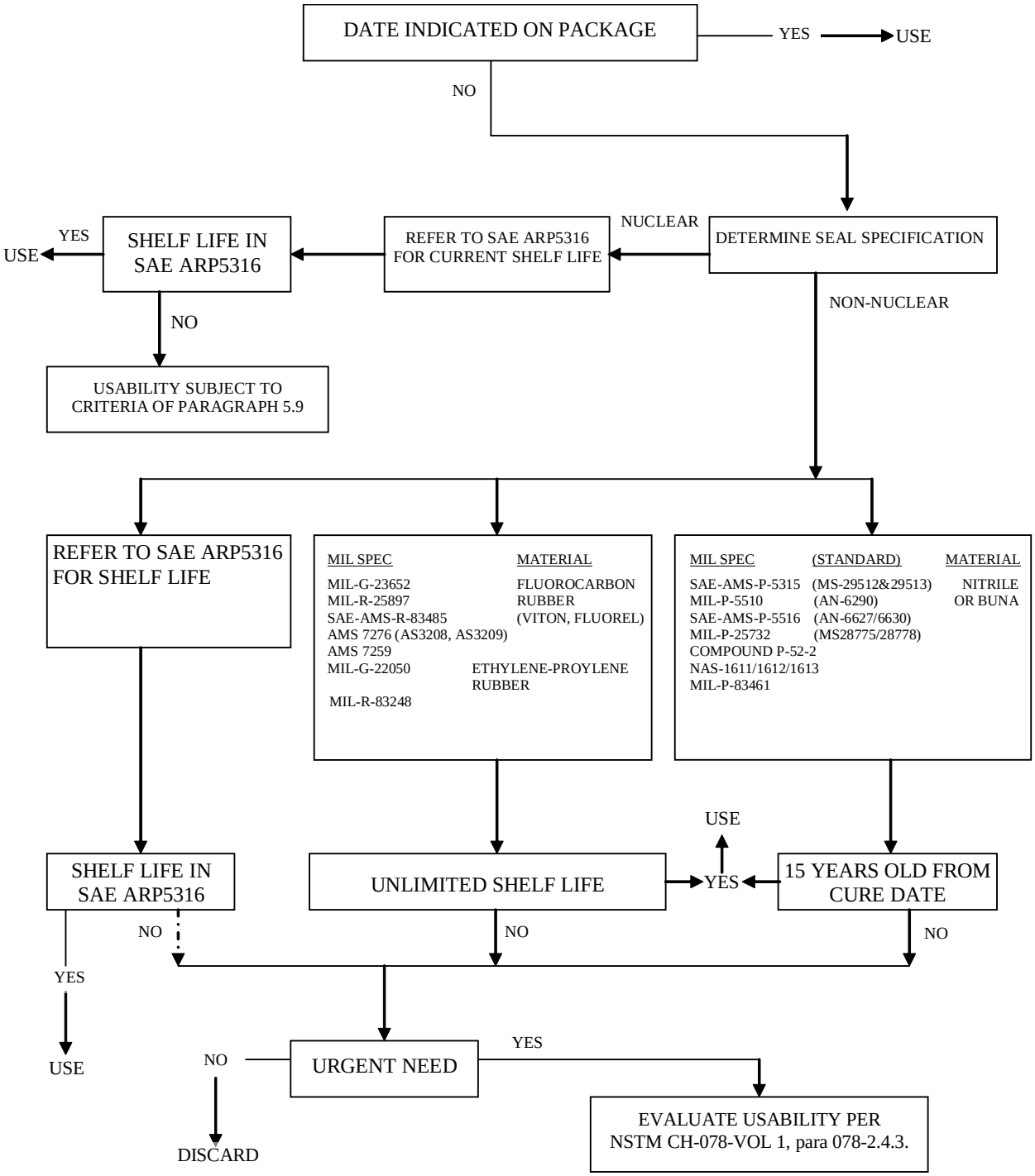

REFERENCES: NAVSEA S9086-CM-STM-010/CH78
NAVSEA 0989-037-2000

ITEM OF UNKNOWN AGE OR MATERIAL

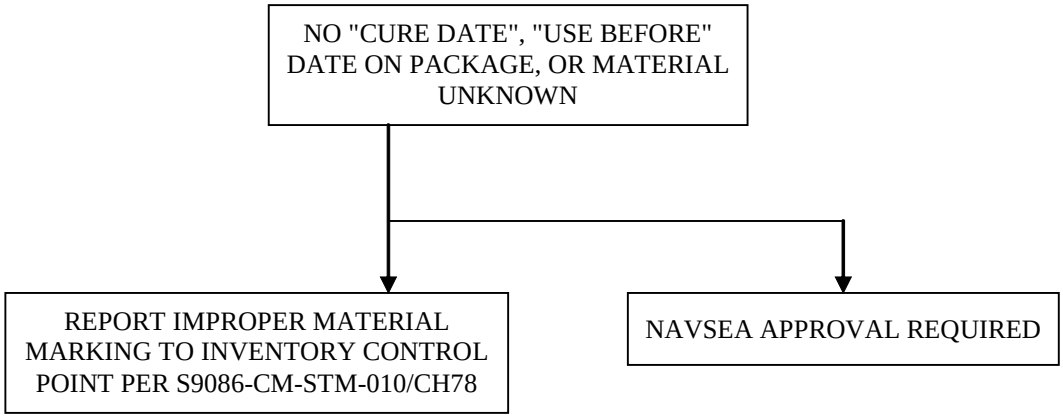

REFERENCES: NAVSEA S9086-CM-STM-010/CH78
NAVSEA 0989-037-2000

CURE DATE ON PACKAGE

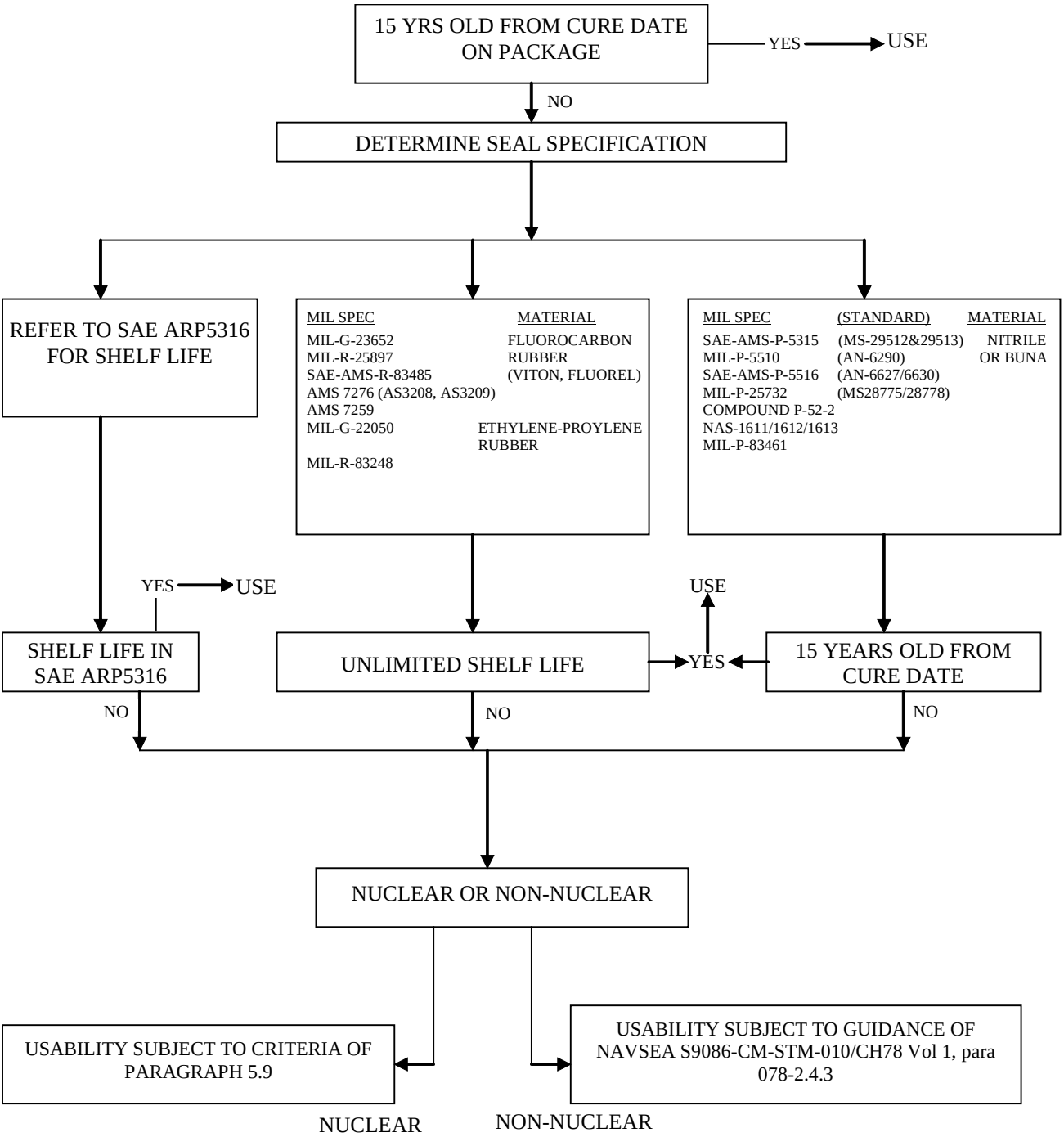

REFERENCES: NAVSEA S9086-CM-STM-010/CH78
NAVSEA 0989-037-2000

APPENDIX B

FORMAT FOR SUBMARINE CERTIFICATION CONTINUITY REPORT

From: USS (Ship's Name)
To: ISIC _____ (Note 1) Deployed ISIC (If applicable)
Info: Parent ISIC (Applicable in all cases when deployed)
Additional Addees (Note 2)

Subj: CERTIFICATION CONTINUITY

Ref: (a) COMFLTFORCOMINST 4790.3 - Joint Fleet Maintenance Manual, Volume V
(b) NAVSEA 0924-LP-062-0010 - Submarine Safety (SUBSAFE) Requirements Manual
(c) NAVSEA T9044-AD-MAN-010 - Requirements Manual for Submarine Fly-By-Wire Ship Control Systems

1. In accordance with reference (a) and (b), all work performed within the SUBSAFE Boundary has been completed and satisfactorily retested except as noted in paragraph 2 below. There are no outstanding RECs for equipment/systems required for underway operations.

2. The following Controlled Work Packages/RECs were closed by transferring the remaining at-sea testing to a Departure from Specifications.

CWP/REC Serial No.	DFS Serial No.	Type	Component

3. All URO MRC mandatory tests/inspections have been successfully accomplished within the required periodicity. The following URO MRC requirements which have become due since the last underway period or which would have become due during this scheduled at-sea period have been completed during the preceding inport period as indicated or require at-sea operations and will be accomplished prior to the listed due date:

URO MRC	Component Ident	Next Due (MO/YR)

4. The URO MRC Automated Work Requests for Ship's Force accomplished items have been signed, the data report forms have been mailed, and copies have been provided to the ISIC.

5. In accordance with reference (a) and (c), all work performed within the Submarine Fly-By-Wire Ship Control System Boundary has been completed and satisfactorily retested. There are no outstanding MCRs for equipment/systems required for underway operations.

NOTE 1: THIS CERTIFICATION REPORT MAY BE PROVIDED TO THE ISIC IN THE FORM OF A MEMORANDUM, MESSAGE, OR LETTER.

NOTE 2: ADDITIONAL ADDEES SHOULD BE ADDED AS NECESSARY BASED ON SITUATION (E.G., REPORT FOR UNDERWAY TRIALS DURING MAJOR INDUSTRIAL AVAILABILITIES WOULD NORMALLY INCLUDE SHIPYARD, NAVSEA AND TYCOM).

NOTE 3: IF NONE WAS ENTERED IN PARAGRAPH 3 THEN PARAGRAPH 4 IS NOT REQUIRED. PARAGRAPH 4 IS ONLY REQUIRED IF URO MRC ITEMS WERE COMPLETED BY SHIP'S FORCE.

NOTE 4: IF NO WORK ON THE SUBMARINE FLY-BY-WIRE SHIP CONTROL SYSTEM WAS PERFORMED, PARAGRAPH 5 IS NOT REQUIRED. PARAGRAPH 5 IS ONLY REQUIRED IF WORK ON THE SUBMARINE FLY-BY-WIRE SHIP CONTROL SYSTEM WAS PERFORMED.

(This Page Intentionally Left Blank)

APPENDIX C

FORMAT FOR FLEET MAINTENANCE ACTIVITY CERTIFICATION REPORT TO TENDED SUBMARINE

Ser

From: Commanding Officer, (FMA)
To: Commanding Officer, (Tended Submarine)

Subj: CERTIFICATION CONTINUITY OF USS (Tended Submarine)

Ref:
(a) COMFLTFORCOMINST 4790.3 - Joint Fleet Maintenance Manual, Volume V
(b) NAVSEA 0924-LP-062-0010 - Submarine Safety (SUBSAFE) Requirements Manual
(c) NAVSEA T9044-AD-MAN-010 - Requirements Manual for Submarine Fly-By-Wire Ship Control Systems

Encl:
(1) Copies of completed Re-entry Controls (REC)
(2) Copies of approved Departures from Specification (DFS) and Liaison Action Requests (LAR)
(3) Copies of completed MCRs for Submarine Fly-By-Wire Ship Control System

1. In accordance with reference (a), (b) and (c), certification of those SUBSAFE/Fly-By-Wire Ship Control Systems or portions of SUBSAFE/Fly-By-Wire Ship Control Systems, on which the FMA performed maintenance, has been sustained by the FMA. All required re-certification of the maintenance has been completed except as noted in paragraphs 2 and 3 below.

2. All CWPs for SUBSAFE/Fly-By-Wire Ship Control Systems opened by the FMA for maintenance have been closed and a copy of each completed REC/MCR is forwarded as enclosures (1) and (3) respectfully:

CWP Serial No.	Task Description	Reason Deferred

3. The following Departures from Specifications (DFS) and Liaison Action Requests (LAR) for deviations from specification were approved as part of FMA maintenance in the SUBSAFE/Fly-By-Wire Ship Control System boundary. Copies of each are provided as enclosure (2):

CWP Serial No.	DFS or LAR Serial No.	Type	Component

4. The following URO maintenance requirements were satisfied and are reported as complete by the FMA. The original data report forms will be mailed to SUBMEPP with copies to your ISIC within 30 days.

URO MRC	EGL (if applicable)	Component Identification	JCN

Copy to:
Parent ISIC for ship
Parent ISIC for FMA

(This Page Intentionally Left Blank)

APPENDIX D

FORMAT FOR NON-FLEET MAINTENANCE ACTIVITY CERTIFICATION REPORT TO TENDED SUBMARINE

From: Commander, <Activity Name>
To: Commanding Officer, <USS Ship Name and Hull Number> Commander <Squadron Number>

Subj: CERTIFICATION CONTINUITY OF USS <Ship Name and Hull Number>, <Availability Number>

Ref:
(a) NAVSEA 0924-062-0010 <Insert Rev>, Submarine Safety (SUBSAFE) Requirements Manual
(b) SS800-AG-MAN-010/P-9290 <Insert Rev> - System Certification Procedures and Criteria Manual for Deep Submergences Systems (DSS)
(c) NAVSEA T9044-AD-MAN-010 <Insert Rev>, Requirements Manual for Submarine Fly-By-Wire Ship Control System (FBW SCS)
(d) COMFLTFORCOMINST 4790.3 <Insert Rev>, Joint Fleet Maintenance Manual

Encl:
(1) List of Closed Re-Entry Controls <optional>
(2) List of Approved Departure From Specification (DFS) <optional>
(3) List of Scheduled URO-MRCs/HIPs Accomplished by the Activity <optional>

1. In accordance with references (a), (b), (c) and (d), certification of SUBSAFE/DSS/FBW SCS systems on which <Activity Name> performed maintenance has been sustained. All required recertification of the maintenance has been completed as noted in paragraphs 2 through 6 below.

2. All REC/MCRs for SUBSAFE/DSS/FBW SCS (SFCC) systems opened by <Activity Name> for maintenance have been closed as noted below:

REC/MCR Serial No	Task Description
<See enclosure (1) if needed>	

3. The following Departures From Specifications (DFSs) for SUBSAFE/DSS/FBW SCS (SFCC) systems were approved as part of <Insert Activity Name> maintenance:

DFS Serial No.	Type	Component
<See enclosure (2) Part A if needed>		

4. In addition to the DFSs listed above, the following DFSs were generated for work accomplished by <Activity Name> for the purpose of testing at Sea. If at sea testing is required, request Ship's Force report via naval message and inform <Maintenance Activity> of the results of at sea testing.

DFS Serial No.	Type	Component
<See enclosure (2) Part B if needed>		

5. The following Scheduled URO-MRCs/HIPs were completed. URO-MRC/HIP data will be forwarded by <Activity Name> to SUBMEPP:

URO-MRC/HIPs	EGL (if applicable)	Component ID	JCN

<See enclosure (3) if needed>

6. <Note: This paragraph is only applicable to those activities acting as a NSA/LMA> In accordance with reference (d) <Activity Name>, as Naval Supervisory Activity, reports that certification of SUBSAFE/DSS/FBW SCS systems for work accomplished by outside activities has been maintained based on the SUBSAFE/DSS/FBW SCS Certification Continuity letters as identified below:

Supervising Activity	Letter Ser No./Naval Message	Description	ALT

SY Commander

Copy to:
COMSUBRON XXX <Assigned Squadron>
NSSC QAO or RSG QAO <as applicable>
NSRO <Shipyard performing work>
NRRO <Shipyard performing work>

APPENDIX E

SEE PART II, CHAPTER 1 ENCLOSURE (1) OF THIS VOLUME.

(This Page Intentionally Left Blank)

APPENDIX F

SEE PART II, CHAPTER 1 ENCLOSURE (2) OF THIS VOLUME.

(This Page Intentionally Left Blank)

APPENDIX G

RPCCR COVER LETTER FOR SHIPALTS (SAMPLE)

9210
Ser CVN XX-RX/
DD MMM YY

NOFORN (When Filled in)

From: Commanding Officer, USS _____ (CVN XX)
To: Commander, Naval Sea Systems Command (NAVSEA 08P)

Subj: CHANGES TO REACTOR PLANT CONFIGURATION STATUS (SHIPALT)

Ref: (a) NAVSEA 0989-043-0000, Commissioned Surface Ship General Reactor Plant Overhaul and Repair Specification (U)

Encl: (1) End of Availability Reactor Plant Configuration Change Letter

(2) RPCCR JCN_____

1. The following reactor plant SHIPALTs are hereby reported in accordance with reference (a) and the SHIPALT Approval Record.

SHIPALT	BRIEF	COMPLETION STATUS

2. Enclosures (1) through (X) attach a Reactor Plant Configuration Change Report for each change in the period _____ through_____ including each completed or partially completed SHIPALT.

3. Ship's Material History Records have been revised in accordance with NAVSEAINST 9210.37 to reflect these modifications and changes to onboard repair part support have been initiated.

X. X. XXXXXX

By direction

Copy to:
COMNAVAIRLANT/COMNAVAIRPAC (Code N9)
ANSTR, Pittsburgh
NAVICP, Mechanicsburg (Code 87)
A4W RPPY
RMO

(Place NOFORN statement)

(This Page Intentionally Left Blank)

APPENDIX H

TECHNICAL MANUAL DEFICIENCY REPORT (TMDER)

Ref: NAVSEAINST 4160.3A NAVSEA S0005-AA-GYD-030/TMMP

NAVSEA/SPAWAR TECHNICAL MANUAL DEFICIENCY/EVALUATION REPORT (TMDER)

INSTRUCTIONS: Continue on 8 ½" x 11" page if additional space is needed.
1. Use this report to indicate deficiencies, problems and recommendations relating to publications.
2. For CLASSIFIED TMDERs see OPNAVINST 5510H for mailing requirements.
3. For TMDERs that affect more than one publication, submit a separate TMDER for each.
4. Submit TMDERs at web site https://nsdsa2.phdnswc.navy.mil or mail to: COMMANDER, CODE 310 TMDER BLDG 1389,
NAVSURFWARCENDIV NSDSA, 4363 MISSILE WAY, PORT HUENEME CA 93043-4307

1. PUBLICATION NUMBER	2. VOL/PART	3. REV/DATE OR CHG/DATE	4. SYSTEM/EQUIPMENT ID

5. TITLE OF PUBLICATION	6. REPORT CONTROL NUMBER (6 digit UIC-YY-any four: xxxxxx-03-xxxx)

7. RECOMMEND CHANGES TO PUBLICATION

7a. Page #	7b. Para #	7c. RECOMMENDED CHANGES AND REASONS

8. ORIGINATOR'S NAME AND WORK CENTER	9. DATE	10. ORIGINATOR'S E-MAIL ADDRESS	11. TMMA of Manual (NSDSA will complete)

12. SHIP OR ACTIVITY Name and Address (Include UIC/CAGE/HULL)	13. Phone Numbers: Commercial (___) ___-____

(This Page Intentionally Left Blank)

APPENDIX I

FLEET COSAL FEEDBACK REPORT

Fleet COSAL Feedback Report

ANCHORDESK WEBSITE

Request Nbr: NOT ASSIGNED **Submitted:** 05/27/2009 07:45 PM

Mandatory Fields in Red

FROM: name/activity	**APL/AEL NUMBER:**	**APL DATE:**
address line 1	**TECHNICAL MANUAL NBR:**	**PAGE:**
address line 2	**REF/CIRCUIT SYMBOL NBR:**	**NSN:**
address line 3	**CAGE:** **JCN/JSN:**	**PART NUMBER:**

TO: NAVSEALOGCEN Building 307 P.O. Box 2060 Mechanicsburg, PA 17055-0795	**NAMEPLATE DATA:** (for material handling Equipment Include USN No)

Fully describe the technical problem. Be specific, include Part Numbers and FSCM, RSNS/CSNS, NSN, and Item Name.

Identify Amplifying Documents Which Are Available

When practical, attach files of any amplifying documents, i.e., copies of Tech. manual pages, drawings, schematics, MRC cards, etc.

File1: Browse... File2: Browse... File3: Browse...

SUBMITTED BY:

Name , Rate, Work Center	**Telephone Number**	**WC Supervisor**
Email Address		

REVIEWED BY:	**ORIGINATOR'S SERIAL/TRANSMITTAL NUMBER:**

This information resides on a DoD interest computer. Important conditions, restrictions, and disclaimers apply.
Please read our Privacy Policy.

Submit

(This Page Intentionally Left Blank)

VOLUME V

PART I

CHAPTER 6

MATERIAL CONTROL

REFERENCES.

(a) NAVSEA 0948-LP-045-7010 - Material Control Standard
(b) NAVSEA SS800-AG-MAN-010/P-9290 - System Certification Procedures and Criteria Manual for Deep Submergence Systems
(c) NAVSEA T9044-AD-MAN-010 - Requirements Manual for Submarine Fly-By-Wire Ship Control Systems
(d) NAVSEA 0924-LP-062-0010 - Submarine Safety (SUBSAFE) Requirements Manual
(e) NASM 7838 - Bolts, Internal Wrenching
(f) NAVSEA S9425-CF-STD-010 - Submarine Antenna/Periscope and Mast Materials
(g) NAVSEA 0900-LP-016-7008 - Submarine Antenna Technical Documentation
(h) NUSC 551 - Handbook for Submarine Antenna Systems
(i) NAVICPINST 4355.5 - Receipt, Inspection, Storage and Issue of Level I/SUBSAFE Material
(j) MIL-STD-792 - Identification Marking Requirements for Special Purpose Components

6.1 PURPOSE. To define responsibility and provide guidance for material control which includes procurement, receipt inspection, stowage, issue, in-process control, and records for controlled material used in maintenance.

6.1.1 Discussion. Controlled material is the term used in this manual to describe those materials designated for use in or removed from Submarine Safety (SUBSAFE), Level I, Scope of Certification (SOC), Submarine Flight Critical Components (SFCC), and Nuclear Level I systems which are in the custody of the end-user work center, division Controlled Material Petty Officer (CMPO) or are undergoing receipt inspection, have been certified for use and are tagged with the appropriate Quality Assurance (QA) forms of this manual. In this manual, material in the custody of the Naval supply system, which includes the supply departments onboard ships and Fleet Maintenance Activities (FMA), is identified as Level I/SUBSAFE (LI/SS) stock program materials or nuclear repair parts. Reference (a) provides the special administrative and technical requirements that are levied by Naval Sea Systems Command (NAVSEA) for materials from fabrication to final installation for non-nuclear and nuclear controlled material, respectively. Section 6.3 of this chapter for non-nuclear material control, and Appendix C of Chapter 1, Part II of this volume for nuclear material control, provide direction for implementation of higher authority requirements pertaining to material control. Reference (b) and Part III, Chapter 6 of this volume provide specific requirements for receipt inspection and control of SOC material.

6.2 NUCLEAR.

NOTE: INFORMATION ON THIS SUBJECT IS SAFEGUARDED IN ACCORDANCE WITH NAVSEAINST C5511.32 AND IS CONTAINED IN PART II, CHAPTER 1 OF THIS VOLUME.

6.3 NON-NUCLEAR.

6.3.1 Controlled Material Determination. This section describes the use of the specific references used to identify proper material for repair work. It is important that the difference between system and part Level of Essentiality be understood. A system may be Level I, but this does not mean that every part in the system will be Level I. This section also provides references and guidance necessary to obtain this understanding and to determine if controlled material is required, and if so, the proper level of control.

6.3.1.1 General Requirements. In order to determine the correct material to be installed in a ship and to properly certify the material prior to installation, the work center responsible for the specific area of the ship must first gather the appropriate reference material as follows:

a. Drawings that specifically define the system and component.

b. Component technical manual.

c. Applicable Allowance Parts List (APL) from the ship's Coordinated Shipboard Allowance List (COSAL).

d. Component replacement manuals, etc.

e. Ship's SUBSAFE Certification Boundary Book.

f. Level I Boundary Book.

g. Military Standards (MIL-STD).

h. Applicable ship class Fly-By-Wire Ship Control System Certification Boundary Book, per reference (c).

6.3.1.1.1 Determination of Required Repair Parts. Using the above reference materials, the required repair parts will be determined by comparing the appropriate part numbers from the drawing to the part numbers/drawings listed in the APL and thereby obtaining the National Stock Number (NSN) with associated Special Material Identification Code (SMIC), if assigned or listed on the APL.

NOTE: THE USE OF LI/SS STOCK PROGRAM MATERIALS AND CONTROLLED MATERIAL WILL BE RESTRICTED TO THOSE SPECIFIC APPLICATIONS WHERE REQUIRED.

6.3.1.1.2 Determination of Level of Control. The next step is to determine if the material identified by the NSNs in paragraph 6.3.1.1.1 of this chapter is certifiable, if required, as controlled material for the system or component. In order to determine level of control required for the parts, the Level of Essentiality for the system and component must be determined for non-nuclear systems:

a. Controlled material is used in systems designated with a Level of Essentiality in accordance with reference (a) for Level I. The definitions of Level I systems and material in accordance with reference (a) are provided to the users of this manual as paragraph 6.3.1.3 and 6.3.1.4 of this chapter.

b. The applicable Level I material control boundary book provides an interpretation of the latest reference (a) requirements.

NOTE: A SMIC (E.G., SS, S1, SB, L/I, C1, VIRGINIA CLASS COMPONENT (VU), SEAWOLF CLASS COMPONENT (SW)), IS ADDED TO THE END OF THE NSN. IT IS ASSIGNED TO SELECTED COMPONENTS AND REPAIR PARTS BY THE NAVAL SUPPLY SYSTEM AND AIDS IN CONTROLLING THE ISSUANCE OF THESE COMPONENTS AND REPAIR PARTS WITHIN THE NAVY SUPPLY SYSTEM. SMIC IS AN ADMINISTRATIVE TOOL FOR THE SUPPLY SYSTEM. LEVEL OF ESSENTIALITY IS A TECHNICAL DESIGNATION APPLICABLE TO SPECIFIC PIPING SYSTEMS.

6.3.1.2 Non-Nuclear Material Level Determination. The crux of the controlled material program at the maintenance level is establishing the required Level of Essentiality for repair parts, to include determination of whether a specific part is SUBSAFE or Level I. This is important for three reasons:

a. To serve as a partial check that the supply system has provided the correct part.

b. To determine record-keeping requirements. This is particularly important in the case of alterations, where drawings may provide no Level of Essentiality for the parts and systems involved, and also on older ships, where the drawings may reflect no Level of Essentiality information at all or may use previous revisions of references (a) or (d).

c. To determine the correct SMIC in the case of non-nuclear repair parts where the COSAL and the applicable drawing conflict over the required Level of Essentiality.

6.3.1.2.1 Systems and Components. Paragraph 6.3.1.3 of this chapter provides the Level I systems and paragraph 6.3.1.4 of this chapter provides the Level I components of reference (a).

6.3.1.2.2 Emergent Situation Upgrading. Upgrading the Level of Essentiality of a repair part provided by the supply system may become necessary during the course of maintenance and can be done in emergent situations using the procedures specified in reference (a) and paragraph 6.3.5 of this chapter.

6.3.1.3 Non-Nuclear Level I Systems and Boundaries.

a. Submarines.

(1) Air, nitrogen and other gas systems, except oxygen and hydrogen, with design pressures of 1500 psig and above. Oxygen and hydrogen systems with a design pressure of 100 psig and above.

(2) Feedwater system with a design pressure of 600 psig and above.

(3) Main steam system, and all branch piping from this system which is designed to the main steam system design pressure, up to and including the first valve downstream of pressure reducing valves and their by-pass valves. Included will be high pressure steam drains up to and including the first valve downstream of the trap or orifice.

(4) Hydraulic systems for any steering or diving control surface, failure of which would cause loss of both the normal and emergency modes of operation for the control surface. Exceptions are internal wrenching bolts per reference (e), and Naval Aerospace Standard cap screws with NAS 1347, Type IV identification need not be to Level I requirements.

(5) All circulating seawater systems (e.g., main seawater, auxiliary seawater, shaft seal water) or portions thereof, continually open to the sea below 200 feet. The brine and seawater feed portion of the distilling or reverse osmosis system which provides the through path of the shaft seal water to the main or auxiliary seawater system.

(6) All seawater and sea connected systems or portions thereof, which are intermittently subject to submergence pressure below 200 feet, and which are within the SUBSAFE Certification Boundary as defined by reference (d).

(7) Torpedo, signal ejector/launcher and trash disposal unit tubes. Included are the breech and muzzle doors and associated piping system components installed between the breech and muzzle doors that form part of the pressure boundary, up to and including the inboard joint of the backup closure.

b. Surface Ships.

(1) Gaseous oxygen systems above 100 psig design pressure except for both the diver's recompression chamber and the diver's surface supplied oxygen systems, which are excluded from Level I unless specifically invoked by NAVSEA in writing.

(2) Gaseous Oxygen piping from the oxygen and nitrogen producer plant, storage tanks and fill station above 100 psig design pressure, including low pressure gaseous oxygen vent piping which is or can be cross-connected with high pressure gaseous oxygen piping.

(3) Fossil fuel powered ships. Main steam and catapult steam systems and all branch piping designed for temperatures above 775°F. Included will be high pressure steam drains up to and including the last valve downstream of the trap or orifice designed for temperatures above 775°F.

(4) Nuclear Powered Surface Ships.

(a) Feed systems with design pressure of 600 psig and above.

(b) Main steam, catapult steam (including the trough heating system), and reboiler systems, and all branch piping connected to these systems designed for main steam system design pressure. Included will be high pressure steam drains up to and including the last valve downstream of the trap or orifice designed for main steam system design pressure.

c. Both Submarine and Surface Ship Requirements. The Level I boundary requirements listed above apply to new construction, repairs, modifications, alterations and conversions for all submarines and surface ships regardless of the material identification and control requirements invoked, or not invoked, by the original shipbuilding specifications and/or system diagrams and component drawings.

NOTE: IT IS NOT THE INTENT TO REMOVE NON-LEVEL I MATERIAL SOLELY FOR THE PURPOSE OF INSTALLING LEVEL I MATERIAL. LEVEL I MATERIAL SHALL BE INSTALLED IN NEW LEVEL I SYSTEMS OR COMPONENTS OR WHEN REPLACING MATERIAL INCIDENT TO THE REPAIR OR REFURBISHMENT OF A LEVEL I SYSTEM COMPONENT(S).

d. Level I Designated Systems. Cognizant NAVSEA technical codes are responsible for determining any additional scope and boundary of individual systems, including the components and parts of components, that are to be controlled as Level I material.

6.3.1.4 Level I Components.

a. Pressure Boundary Parts. Pressure boundary parts of components within Level I systems shall be controlled. Level I pressure boundary parts include piping, tubing and the following:

(1) Bodies. In general, these are the parts of a component that are the pressure boundaries of the component, including end connections. Examples are:

(a) Valve bodies.

(b) Strainer bodies.

(c) Cylinders (flasks, reservoirs).

(d) Pipe fittings (elbows, tees, couplings, union assemblies, separately furnished union tail-pieces).

(e) Trap bodies (housings).

(f) Orifice plates.

(2) Covers. In general, these are component parts which act as pressure boundaries for the bodies listed above and other items. Examples are:

(a) Valve bonnets.

(b) Valve caps.

(c) Strainer caps.

(d) Closure plates for cylinders.

(e) Oxygen and nitrogen valve cartridges.

(3) Plugs. All plugs, including submarine zinc anode plugs, set screws, adjusting screws and vent and drain plugs which form a part of the Level I pressure boundary, or otherwise opened to the sea below 200 feet.

(4) Fasteners. Bolts, nuts, studs, stud-bolts, and screws used when joining two pressure boundary parts. All hull integrity fasteners shall be Level I. Fasteners used for joining non-Level I machinery or equipment to Level I material shall be Level I when the component is located within the Level I boundary.

(5) Extension Pieces. In general, these are branch systems connecting "bodies" and "covers" which are subject to piping system pressures and temperatures. In many cases they are furnished with end connections for installing into either main or branch system piping. Examples are:

(a) Blowdown or drain nipples (e.g., pipe, including pipe fittings or flanges).

(b) Union tail-pieces when part of a component end connection (including flange union connections).

(c) Separate bosses (attached to "bodies" or "covers" and providing connections for external piping).

(6) Miscellaneous.

(a) Portions of submarine pressure hull penetrations, excluding hull structure items, which isolate seawater from the submarine atmosphere. Examples of hull penetrations are: hull fittings (electrical and fiber optic), rodmeters, periscopes, and periscope hoist cylinders, radar masts and antennas, main propulsion shaft seal housings, floating wire and towed array shear valve assemblies, and lubrication distribution valves.

(b) Brazing alloys and welding filler metals, including consumable inserts.

(c) Union nuts (both bonnets and end-connection unions).

(d) Hose assembly end fittings and the nipple, flange, and body of sound isolation couplings (e.g., Rubber Insert Sound Isolation Couplings (RISIC)) which form a part of the pressure boundary.

(e) All submarine seawater or sea connected hull and backup valve internal metallic pressure containing parts that serve to directly isolate seawater from the atmosphere or downstream connected system(s) (e.g., balls, disks, flappers, and poppets).

(f) Valve stems which penetrate the pressure boundary.

(g) Oxygen charging lines and assemblies.

(h) In-line instrumentation components and parts:

INSTRUMENTS	LEVEL I PARTS
Temperature	Thermowell (welded and flanged bare bulb)
Flow	Meter casing
Liquid level	Tank penetration fitting
Pressure	Root valve of pressure instrument piping
Gage column (MIL-I-20037)	Isolation valve

(i) Propulsion shafts for submarines.

(j) Through hull operating shafts for submarines.

(k) Fasteners and plugs for the components listed in paragraph 6.3.1.4.b.(9) of this chapter, and Level I systems as defined in paragraph 6.3.1.3 of this chapter, which satisfy the above description of a Level I pressure boundary part.

b. Exclusions. Items and components specifically excluded from the classification of Level I are:

(1) Packing gland assemblies located in the systems and their components identified in paragraph 6.3.1.3 of this chapter and stuffing boxes. This includes their associated flanges, fasteners, followers, and retainers.

(2) Pressure seal rings, gaskets, O-Rings, packing and similar sealing members used in conjunction with joining two pressure boundary parts.

(3) Silver braze flux.

(4) Flexible hoses and RISIC rubber elements.

(5) Gages, gage valves, pressure indicators, measuring instruments, and their associated piping installed downstream of root valves in instrumentation piping or that which does not form a part of the pressure boundary.

(6) Pipes, fittings, mufflers and Quiet Pressure Release Devices for the high pressure air system etc., continuously open to ambient conditions and only transiently subjected to pressures in excess of paragraph 6.3.1.3 of this chapter criteria (e.g., open-ended ballast tank piping outboard of the pressure hull penetration, open-ended vents and drains).

(7) Valve yokes and bonnet retainers restrained by the body inside diameter that do not directly form the pressure boundary, but retain parts that do form the pressure boundary, unless otherwise specified.

(8) Items not permanently installed (portable) and designated only for dockside use.

(9) Pumps, distilling plants, compressors, heat exchangers, oxygen generators, steam turbines, condensers, hydraulic accumulators and dehydrators.

(10) Washers.

(11) Valve stem retaining nuts that do not come in direct contact with system fluid and serve no other function than to retain the stem.

(12) Valve seat retainers and other internal parts that are totally enclosed within the pressure boundary except for those parts described in paragraph 6.3.1.4.a.(6)(e) of this chapter.

(13) Non consumable weld backing rings.

(14) Piping system sleeves.

6.3.2 Quality Assurance List (Submarines only). Quality Assurance Lists (QAL) on NAVSEA drawings specify Nondestructive Test (NDT) requirements for items scheduled for installation within the SUBSAFE boundary during new construction. The QALs should only be utilized for guidance subsequent to ship's commissioning, since they will not necessarily reflect current NDT requirements.

6.3.3 Controlled Material Procurement. This section provides general guidance for procurement of controlled material. It should be noted that NAVSEA and Naval Inventory Control Point (NAVICP) have adequate programs in place for procurement of controlled material for non-nuclear applications. Therefore, ships and repair activities should always obtain controlled material from the Navy stock system. This section also provides:

a. Background regarding NAVSEA and NAVICP controlled material procurement programs.

b. Summary of or reference to the NAVSEA and NAVICP requirements for controlled material procurement.

6.3.3.1 General Requirements.

a. The LI/SS material procurement program procures and certifies materials that are generally identified in the supply system by SMIC SS, SB, L/I, C1, D1, S1, etc. Stock system or installed items that fall under the SUBSAFE category are generally restricted to castings and fasteners. Stock system or installed items that fall under the Level I category are generally restricted to metallic pressure boundary parts and components.

b. The SFCC material procurement program procures and certifies materials that are identified in the supply system by SMIC VU and SW. Stock system or installed items that fall under SFCC are generally electronic circuit cards with embedded software.

c. LI/SS stock program material pass from the manufacturers into the Navy supply system by way of Navy receipt inspection activities, which examine the material and subject it to a number of tests. SUBSAFE/Level I material which meets acceptance criteria is marked with a permanent Material Identification and Control (MIC) code as required by reference (a). Not all material within the SUBSAFE boundary supplied by the shipyard during new construction is required to be marked. SUBSAFE castings receive a permanent SUBSAFE marking (SS encircled by a hexagon box). The MIC and SUBSAFE markings are in addition to the required manufacturer's marking, which need not be maintained after the MIC marking is added, except in the case of non-nuclear fasteners.

NOTE: PER REFERENCE (d), ANY L/I STOCK SYSTEM SUPPLIED ITEMS WITH 1990 OR LATER MIC ARE ACCEPTABLE FOR USE WITHIN THE SUBSAFE CERTIFICATION BOUNDARY WHEN THE APL OR DRAWINGS INDICATE SS SMIC MATERIAL IS REQUIRED. SS SMIC CODED ITEMS CURRENTLY IN STOCK MAY BE USED IN SS APPLICATIONS WITHOUT FORMAL DOWNGRADING.

6.3.3.2 Controlled Material Procurement.

a. Material Procurement. Requisitioning of LI/SS/SFCC controlled material is done in accordance with standard supply instructions. Determination of the systems that require the use of LI/SS/SFCC material is addressed in paragraph 6.3.1 of this chapter.

b. Stock System LI/SS/SFCC Material. Stock system LI/SS/SFCC materials will be requisitioned in accordance with normal supply department procedures ensuring that the SMIC is identified, if assigned to the item.

c. (Submarines only) Submarine Antenna Engineering Directorate (SAED)-Submarine Antenna Quality Assured Material (SAQAM) LI/SS Material. SAED-SAQAM LI/SS material will be requisitioned in accordance with normal supply procedures with the additional guidance from references (f), (g) and (h). The supply and QA standards are discussed in references (h) and (i).

d. Other Controlled Material. Material procured for structural repairs, modifications or fabrication will be compatible with existing structure as specified in applicable plans and MIL-STDs.

e. LI/SS material to be procured outside the supply system.

(1) Requisitions for non-nuclear LI/SS stock program material shall be prepared according to reference (i) and other applicable Naval Supply Systems Command (NAVSUP) documents.

(2) Reference (i) states in part:

(a) "Local purchases or manufacture of non-nuclear LI/SS Stock Program stock numbered material, not available from the supply system, will be reported to NAVICP for demand recording purposes. The local purchase/manufacture action will be reported via a Demand Only Transaction (DOC ID DHA) in accordance with the procedures established in NAVSUP 437. A DHA will not be submitted when the original requisition was submitted with advice code 2C or 5C since NAVICP records demand for 2C/5C requisitions returned for local action."

NOTE: THERE ARE NO LI/SS STOCK PROGRAM ITEMS THAT ARE CODED FOR LOCAL PURCHASE.

(b) "Local purchases or manufacture of LI/SS Stock Program non-stock numbered material will be reported to NAVICP to record demand and usage to determine whether the item should be stock numbered. The local purchase/manufacture action will be reported via a Report of Local Purchase for Non-stock Numbered Items (DOC ID BHJ) in accordance with the procedures established in NAVSUP 437. A BHJ will not be submitted when the requisition for a non-stock numbered item is submitted to a stock point or to NAVICP for supply action."

(3) Procurement of non-nuclear Level I material from other than the Navy stock system is not permitted except in emergent situations as discussed in Section 3 of reference (a). Such procurement will be through NAVICP Mechanicsburg only. Requisitions to NAVICP will include all of the information listed below:

(a) If material certification requirements of reference (a) call for destructive tests, enough material must be procured in the lot for performance of such testing.

(b) Complete specifications must be provided for all LI/SS material requisitions for non-Navy stock system material. These specifications must include:

1 Marking requirements, if applicable.

2 Material designation.

3 Military and/or federal specifications, that must be met (e.g., ultrasonic testing inspection of a fitting).

4 Grade, class, type, form and manufacturing process (e.g., plate, class B, Type I, hot forged).

5 American Society for Testing and Materials, American Iron and Steel Institute, Society of Automotive Engineers (whether item is procured in whole or in part).

6 Request for a certification of compliance or detailed analysis if required.

7 All ordering data required by applicable military/federal specifications and/or industry standards/specifications shall be provided in the requisition.

(c) Descriptive language on all documents will be clear and detailed so that no choice is left, either to the vendor or the activity concerned, as to what material is to be furnished.

(d) The vendor will also be required to provide the following documentation with the material, to enable the material to be certified for "Level" application.

1 Chemical: Quantitative analysis for principal constituent elements according to reference (a).

2 Physical: Mechanical properties (e.g., yield strength, tensile strength, elongation or hardness testing) as specified in reference (a).

3 Fabrication: Documented compliance with fabrication procedures including NDT (e.g., seamless tubing).

6.3.4 Receipt Inspection of Controlled Material. This section provides the guidance and procedures for forces afloat and FMAs to conduct and document receipt inspections to certify controlled material as acceptable for installation.

6.3.4.1 General Requirements. Once the material ordered for use in SUBSAFE and Level I systems is received, the material must be receipt inspected in accordance with reference (a). Once the material ordered for use within the submarine Fly-By-Wire Ship Control System Certification Boundary is received, the material must be receipt inspected in accordance with reference (c). Receipt inspection of these materials is required to establish positively that the material is the correct material for the job.

NOTE: THE TECHNICAL INSPECTION REQUIREMENTS OF THE APPLICABLE TECHNICAL MANUAL, DRAWING OR OTHER TECHNICAL REFERENCE AND PIPING SYSTEM MATERIAL REQUIREMENTS (E.G., CLEANLINESS, DIMENSIONS, SURFACE FINISH) ARE

THE RESPONSIBILITY OF THE END-USER (WORK CENTER SUPERVISOR/ CRAFTSMAN) TO ACCOMPLISH PRIOR TO INSTALLATION AND ARE NOT PART OF THE RECEIPT INSPECTION OF THIS MANUAL.

a. Reference (a) provides the controls and certain testing requirements that are levied by NAVSEA to cover the material from fabrication to final installation for Level I material. Reference (c) provides the controls and certain testing requirements that are levied by NAVSEA to cover the material from certification to final installation for SFCCs.

b. For Level I, SUBSAFE and SFCC material, the unique requirement for "traceability" is invoked, meaning that a marking system is employed which links the material to Objective Quality Evidence (OQE). OQE for the material is the quantitative and qualitative data proving that the material conforms to specified requirements. To meet the requirements for traceability, the following requirements are instituted:

(1) Receipt inspection of the material.

(2) Use of QA tags in association with the item(s).

(3) Segregated stowage for LI/SS/SFCC stock program material, and controlled material.

(4) Custody by CMPO/Controlled Material Handlers (CMH), Quality Assurance Inspectors (QAI) or qualified craftsman.

(5) Use of material verification procedures, as required by reference (a), during installation of the material.

6.3.4.2 Quality Assurance Forms for Receipt Inspections. The QA forms necessary to complete and document receipt inspections (QA form 1 and QA form 2) are addressed in paragraphs 6.3.4.5.q and 6.3.5 of this chapter.

6.3.4.3 Receipt Inspection and Certification of Valve Balls. New stock system SUBSAFE balls are certified for use prior to placing an "SS" SMIC on them. Refurbished teflon coated valve balls also are certified for use according to the indicated SMIC ("SS", "L/I", "Q3" or "QA").

a. Balls received with a SMIC code "SS" or "L/I" are acceptable for use in SUBSAFE or Level I system applications as specified by the applicable APL or drawing without further tests prior to installation.

b. Balls received with a SMIC code "QA" or "Q3" are acceptable for use in SUBSAFE or Level I system applications unless required to be L/I in accordance with paragraph 6.3.1.4.a.(6)(e) of this chapter.

c. Balls received with a SMIC code "QA" or "Q3" may be certified as acceptable for use in SUBSAFE or Level I system applications defined in paragraph 6.3.1.4.a.(6)(e) of this chapter by either:

(1) Request certification papers from NAVICP code 8452 based on the heat and lot data etched in the fluid flow path of the ball, if available, and based on the certification papers and satisfactory receipt inspection locally assign a MIC number or

(2) If certification papers are not available or heat and lot data is not present in fluid flowpath, conduct a generic material identity test, hardness test, perform applicable NDT and obtain Type Commander (TYCOM) approval of a major Departure from Specification (DFS) in accordance with Part I, Chapter 8 of this volume.

d. Balls certified as acceptable for use in accordance with paragraph 6.3.4.3.c of this chapter shall be marked with a locally assigned MIC marking in the fluid flow path of the ball in accordance with paragraph 6.3.7.1 of this chapter, providing traceability to applicable certification papers, test documentation, and approved DFS.

6.3.4.4 Level I/SUBSAFE and Submarine Flight Critical Component Receipt Inspection. The receipt inspection requirements for LI/SS material from reference (a) are provided in paragraph 6.3.4.5 of this chapter and will be used for the receipt inspection of SUBSAFE and Level I material. The receipt inspection requirements for SFCC material from reference (c) are provided in paragraph 6.3.4.5 of this chapter and will be used for the receipt inspection of SFCC material.

6.3.4.5 General Requirements for Level I/SUBSAFE and Submarine Flight Critical Component Material.

a. Traceability for SUBSAFE, Level I, and SAED-SAQAM having an "SS" SMIC and Level I Material is to be maintained from the material back to its certification records. Material losing its identity will be considered unsuitable for use until identification can be positively re-established. It will be segregated from other controlled material, tagged and handled as rejected material. Traceability for SFCCs having a SMIC code of (VU) or (SW) is to be maintained from the material back to its certification records. Material losing its identity will be considered unsuitable for use until identification can be positively re-established. It will be segregated from other controlled material, tagged and handled as rejected material. Upon determination that the SFCC is nonconforming and unusable for Fly-By-Wire Ship Control Systems (FBW SCS) Flight Critical applications, the SFCC shall be clearly identified as rejected and the SMIC marking shall be removed or obliterated.

b. Supply departments of Fleet activities will perform the basic receipt inspection required by the appropriate NAVSEA, NAVICP, and/or NAVSUP instruction prior to placing the material into stock inventory. QA forms of this manual are not required to be completed and/or placed on the material by supply department personnel.

NOTE: LI/SS/SFCC STOCK PROGRAM MATERIAL BECOMES CONTROLLED MATERIAL, FOR THE PURPOSES OF THIS MANUAL, WHEN THE MATERIAL HAS BEEN RECEIVED BY THE CMPO OF THE WORK CENTER OR DIVISION.

c. Material identification must remain on or with the material throughout all stages of stowage, fabrication and installation. SFCC Certification OQE shall be kept with the SFCC until the part is installed in the system.

d. Material awaiting or undergoing receipt inspection will be segregated from accepted material.

e. Material which met specifications at the time of procurement, but cannot be used in the system for which it was procured because of a change in requirements occurring after submission of material requests, will be returned to the supply department with a QA form 3.

f. LI/SS. Material NAVICP procured for the LI/SS Stock Program which meets the required SUBSAFE attributes will in addition to being inscribed with a MIC number, also may have an SS inside a hexagon box <SS>. Level I material will also be inscribed with a MIC number which provides traceability back to the certification documents or certifying activity.

NOTE: NON-LI/SS STOCK PROGRAM SUBSAFE MATERIAL WILL NOT BE MARKED WITH A <SS>.

g. (Submarines only) SAED-SAQAM Material with a "SS" SMIC. A "Certification Statement" required by reference (g) must accompany the material unless the material is certified and marked by an NAVICP certifying activity, and is received from the LI/SS stock program.

(1) Submarine Periscope/Antenna SUBSAFE parts received after 31 July 1979 will be marked in accordance with reference (a).

(2) SUBSAFE Periscope/Antenna parts received prior to 31 July 1979 were marked "Ser 1991-921A <SS>" by Portsmouth Naval Shipyard or "Ser 1991-921A-061 <SS>" by Naval Surface Warfare Center, Carderock Division (Submarine Antenna Engineering Directorate).

(3) Parts not marked in accordance with paragraph 6.3.4.5.g.(1) of this chapter may be used providing the certification can be positively traced to certification records via certificate of conformance which records a traceable number on the material as recorded on the certificate of conformance. If certification records can not be located, then an approved major DFS in accordance with Part I, Chapter 8 of this volume is required if the part must be used in lieu of a certified part.

h. Transfer of Level I and SFCC Material Between Activities. Material which is procured or manufactured and certified by an authorized certifying activity and which is then transferred to another activity may be accepted for use by the receiving activity after satisfactory receipt inspection in accordance with paragraph 6.3.4.5.q of this chapter.

i. Non-Standard Stock Certification Documentation. Material procured from non-government sources or shipped direct from the manufacturer and not certified by the LI/SS stock program must be receipt inspected in accordance with paragraph 6.3.5.1 of this chapter.

j. Accepted Material. Each acceptable unit of issue (e.g., valve, fitting, can of welding rod) will have a Material Identification/Control Tag (QA form 2) attached.

k. New Construction. The acceptable certification for SUBSAFE, Level I and SFCC material provided to new construction ships by shipbuilders as on board repair parts consists of a written statement from the cognizant Supervising Authority. The letter will certify that the material is acceptable and has been proven by a sampling audit. The letter will also list the certified material furnished. A copy of this letter will be kept by the ship as a permanent record. After receipt of the initial letter during new construction and delivery of the ship, additional material will not be accepted without a letter being provided with or prior to receipt of the items.

l. Package Alteration Kits. Package alteration kits should not normally be opened until the ship/FMA is ready to proceed with the installation, provided that a certification of the contents and a copy of the installation instructions are in the envelope on the outside of the box. When the ship/FMA is ready to proceed with the installation, the lead work center CMPO will open the kit and perform the receipt inspection.

m. Installed material or upgraded existing material on a ship originally built or upgraded to SUBSAFE/Level I standards involved in a repair will be assumed acceptable.

CAUTION: MATERIAL REMOVED FROM A SHIP UNDERGOING INACTIVATION CANNOT BE REINSTALLED IN A LEVEL I APPLICATION WITHOUT FOLLOWING THE GUIDELINES IN REFERENCE (d).

n. Reuse of Previously Certified Level I/SFCC Material. Material removed from a ship originally built or upgraded to Level I or SFCC certified, which is subsequently installed in another ship, will be assumed acceptable provided control (traceability) is available in FMA or ship records proving the item was removed from a ship built or upgraded to Level I or SFCC certified and verification of the following:

(1) The level of certification of the system in the ship from which the part was removed is the same as the level of certification required for end use.

(2) DFS log (for the ship from which the material is removed) does not identify any outstanding DFS against the item that would preclude end use. Copies of outstanding DFS must be provided with the material. Those outstanding DFS for the material on the supplying ship will be cleared and the receiving ship will process new DFS on board in accordance with Part I, Chapter 8 of this volume.

(3) The files of DFS approved as permanent repairs (for the ship from which the material was removed) have been reviewed and copies of applicable DFS provided with the material.

(4) Ship's plans (for the ship from which the material was removed) do not identify any drawing differences from the ship's plans for the ship onto which the material will be installed.

(5) End use installation is consistent with the previous service parameters such as the design pressure rating, design temperature rating, or system applicability of the component.

CAUTION: MATERIAL REMOVED FROM A SHIP UNDERGOING INACTIVATION CANNOT BE REINSTALLED IN A SUBSAFE APPLICATION WITHOUT FOLLOWING THE GUIDELINES IN REFERENCE (c).

o. Reuse of Previously Certified SUBSAFE Material. (For commissioned ships only) Material removed from a ship originally built or upgraded to SUBSAFE, which is subsequently installed in another ship, will be acceptable under the following conditions:

(1) A Maintenance Certification Record/Re-Entry Control is used to document removal from the supplying ship. The supplying ship must be SUBSAFE certified and re-entry control must be in effect.

(2) All DFS (active and those accepted as permanent repairs that are not yet reflected in ship's selected record drawings/data or technical variance documentation), applicable technical variance documentation, the last accomplishment date and category of all applicable Unrestricted Operation (URO) Maintenance Requirement Card (MRC) inspections, and all legible component markings will be documented and supplied to the receiving activity along with a copy of the supplying ship's Maintenance Certification Record/Re-Entry Control. This documentation will be maintained and filed with the SUBSAFE Controlled Work Package that installed the component on the receiving ship. Those outstanding DFS for the material on the supplying ship will be cleared and the receiving ship will process a new DFS on board in accordance with Part I, Chapter 8 of this volume.

(3) The receiving activity will conduct material inspection to verify the following conditions:

(a) Received component came from a ship that has been previously SUBSAFE certified and for which Re-Entry Control has been maintained since initial certification.

(b) Material marking on hardware matches material marking on supporting documentation.

(c) Applicable URO MRC inspections are current for the intended end use.

(d) End use installation is consistent with the previous service parameters such as the design pressure rating, design temperature rating, or system applicability of the component.

(4) Receiving activity will update applicable technical data to document information and records provided by paragraph 6.3.4.5.o.(2) of this chapter (e.g., ship's drawing index for drawing revision, date of last URO MRC periodicity accomplishment, and documentation of outstanding DFS) into ship's Current Ship's Maintenance Project and other records.

(5) Material which does not meet the requirements of paragraph 6.3.4.5.o.(3) of this chapter will be acceptable for use under the following conditions:

(a) For material which does not meet the requirements of paragraph 6.3.4.5.o.(3)(c) of this chapter, the material will be subjected to and comply with the applicable URO MRC inspections required for the receiving ship's end use application.

(b) For material which does not meet the requirements of paragraph 6.3.4.5.o.(3)(d) of this chapter, the material will be subjected to and satisfy the pressure and operability tests that would be required for a new component installed in the receiving ship, provided the design rating is consistent with the intended end use.

p. Reuse of material in the previously certified SUBSAFE work control boundary from a ship whose SUBSAFE certification has lapsed by virtue of inactivation availability commencement, shall be in accordance with reference (d).

q. Material received from Navy stock system. SUBSAFE/Level I/SFCC material received from the Navy supply system will be receipt inspected by the CMPO as follows:

Procedure	Responsibility
Visually inspect the material.	CMPO/CMH
Check that quantity received is same quantity ordered.	CMPO/CMH
Check for completeness (i.e., are all parts of a component present); disassembly is not required or desired.	CMPO/CMH
Verify item has MIC number and MIC number is correct in accordance with paragraph 6.3.7 of this chapter (not applicable to SFCC).	CMPO/CMH
For Fasteners: Document the markings from the fastener to include either:	CPO/CMH
(1) The color code and the heat/lot number, material type and manufacturer's symbol (for nuts containing a self-locking insert, the color of the insert is the manufacturer's symbol).	
(2) The MIC number (when MIC number is on the fastener or on the individual tag for some small fasteners).	
For Flight Critical Components, verify that the SFCC certifying activity identified on the accompanying OQE is traceable to one of the NAVSEA approved activities listed in paragraph 2.4.1 of reference (c).	CMPO/CMH
For Flight Critical Components, ensure applicable SMIC marking is listed on supply documentation/component.	CMPO/CMH

NOTE: MORE THAN ONE MIC NUMBER MAY BE ON A COMPONENT (E.G., VALVE BODY MAY HAVE ONE MIC NUMBER AND THE BONNET MAY HAVE ANOTHER MIC NUMBER). IF THE COMPONENT HAS A SHORTENED MIC MARKING, ENSURE THE FULL MIC MARKING IS AVAILABLE ON THE SHIPPING DOCUMENTS, TAGS, AND/OR PACKAGING. VERIFY THAT THE SHORTENED MIC MARKING IS CORRECT IN ACCORDANCE WITH PARAGRAPH 6.3.7 OF THIS CHAPTER AND REFERENCE (a).

For SUBSAFE material, verify MIC number including proper "SS" markings.	CMPO/CMH
Check that the MIC number is traceable to a NAVSEA authorized certifying activity, (e.g., Is there an "A" for Portsmouth Naval Shipyard?). See paragraph 6.3.6 of this chapter for list of authorized certifying activities and paragraph 6.3.7.2 of this chapter for additional guidance on MIC marking.	CMPO/CMH
Check NSN on part and verify that it is the NSN ordered.	CMPO/CMH
For oxygen clean material verify that the package is sealed and marked with a certified oxygen clean tag.	CMPO/Cleanliness Inspector/CMH
Fill out QA form 1 and attach the shipping papers, if provided.	CMPO/CMH

NOTE: QA FORM 1 IS NOT REQUIRED FOR SHIP'S FORCE WHEN PERFORMING RECEIPT INSPECTION OF MATERIAL TO BE IMMEDIATELY INSTALLED FOR A SPECIFIC JOB. IF ALL MATERIAL IS NOT UTILIZED IN THE ONGOING JOB, QA FORM 1 MUST BE FILLED OUT PRIOR TO PLACING THE MATERIAL IN A STOWAGE LOCKER/AREA.

NOTE: IF THE COMPONENT HAS A SHORTENED MIC MARKING, ENSURE THE FULL MIC MARKING FROM THE SHIPPING DOCUMENTS, TAGS, AND/OR PACKAGING IS ENTERED ON QA FORM 1 AND QA FORM 2.

Fill out and attach QA form 2 to each unit of issue accepted.	CMPO/CMH
If material fails any of above steps reject and attach QA form 3.	CMPO/CMH
<u>Procedure</u>	<u>Responsibility</u>
Verify that the item is what is required for intended use and turn the material over to craftsman for fabrication and/or installation or stow in a controlled material storage area.	CMPO/CMH
Forward QA form 1 to the QA office when the material has been issued for installation.	CMPO/CMH

NOTE: SUBSAFE/LEVEL I MATERIAL RECEIVED FROM THE NAVY SUPPLY SYSTEM WITH PROPER MATERIAL MARKINGS DO NOT REQUIRE “H” PRESSURE TESTING AFTER RECEIPT INSPECTION.

r. SFCCs may be downgraded for use in non-SFCC, however, the component shall not be subsequently reinstalled into any SFCC application if it was ever installed in a non-SFCC application. The SMIC markings on the SFCC shall be obliterated and the certification records for the item annotated to indicate the item is no longer a certified SFCC prior to being installed.

6.3.5 Receipt Inspection of Open Purchase (Non-Supply System) or Locally Manufactured Material or Upgrading Supply System Material to Level I (Fleet Maintenance Activity only).

6.3.5.1 Uncertified Material Required for Level I Applications. For uncertified material required for use in a Level I application, the item must comply with the requirements of reference (a). Fleet activities shall not certify open purchase (non-supply system/no NSN) materials to Level I requirements without specific authorization from TYCOM/NAVSEA. Additionally, unless authorized in advance, a major DFS in accordance with Part I, Chapter 8 of this volume must be processed.

a. Uncertified material (supply system/NSN assigned) received or used as a starting material for a manufactured part for Level I requirements must be receipt inspected in accordance with reference (a) by a certifying activity (e.g., shipyard, FMA).

b. Upon completion of the requirements of reference (a) the following procedure will be used:

Procedure	Responsibility
Review vendor data (if provided with material), MIL-STD, and/or FMA manufacturing and test data to ensure that it all matches. See note at end of this table regarding vendor data.	FMA Quality Assurance Officer (QAO)
Place certifying FMA MIC markings on the item.	FMA CMPO/CMH/QAI
Fasteners will be appropriately marked and color coded if required.	FMA CMPO/CMH/QAI
Fill out QA form 1 to document the receipt inspection.	FMA CMPO/CMH/QAI
File QA form 1 with all applicable documents.	FMA Quality Assurance Supervisor
Verify that the item is what is required for intended use and turn the material over to craftsman for fabrication and/or installation or stow in a controlled material storage area.	FMA CMPO/CMH/QAI
Forward QA form 1 to QA Office when the material has been issued for installation.	CMPO/CMH

NOTE: VENDOR DATA - MATERIAL RECEIVED DIRECTLY FROM THE MANUFACTURER REQUIRES THE FOLLOWING CERTIFICATION DOCUMENTATION AS A MINIMUM:

(1) CHEMICAL: QUANTITATIVE ANALYSIS FOR PRINCIPAL CONSTITUENT ELEMENTS IN ACCORDANCE WITH REFERENCE (a).

(2) PHYSICAL: MECHANICAL PROPERTIES (YIELD STRENGTH, TENSILE STRENGTH, ELONGATION OR HARDNESS TESTING) AS SPECIFIED IN REFERENCE (a).

(3) FABRICATION: DOCUMENTED COMPLIANCE WITH FABRICATION PROCEDURES INCLUDING NDT (E.G., SEAMLESS CONDITION OF TUBING).

c. If all testing required by reference (a) cannot be accomplished, then, as a minimum, a generic materials identity test, hardness test, and visual inspection will be accomplished and a major DFS must be processed in accordance with Part I, Chapter 8 of this volume.

6.3.5.2 Uncertified Material Required for SUBSAFE Applications. For uncertified material required for use in a SUBSAFE application and requiring an "SS" certification, the item must first comply with the requirements for Level I discussed above and the requirements of reference (d). Fleet activities shall not certify non-level materials to SUBSAFE requirements without specific authorization from TYCOM/NAVSEA and, unless authorized in advance, a major DFS in accordance with Part I, Chapter 8 of this volume must be processed.

6.3.5.3 Uncertified Material Required for Submarine Flight Critical Component Applications. Fleet activities shall not install non-certified SFCC materials within the SFCC boundary without specific authorization from TYCOM/NAVSEA and, unless authorized in advance, a major DFS in accordance with Part I, Chapter 8 of this volume must be processed.

a. Upon completion of the requirements of reference (c) the following procedure will be used:

Procedure	Responsibility
Fill out QA form 1 to document the receipt inspection	FMA CMPO/CMH/QAI
NOTE: QA FORM 1 IS NOT REQUIRED FOR SHIP'S FORCE WHEN PERFORMING RECEIPT INSPECTION OF MATERIALS TO BE IMMEDIATELY INSTALLED FOR A SPECIFIC JOB. IF ALL MATERIAL IS NOT UTILIZED IN THE ONGOING JOB, QA FORM 1 MUST BE FILLED OUT PRIOR TO PLACING MATERIALS IN A STORAGE LOCKER/AREA.	
File QA form 1 with all applicable documents	FMA Quality Assurance Supervisor
Verify that the item is what is required for intended use and turn the material over to craftsman for installation or stow in a controlled material storage area.	FMA CMPO/CMH/QAI
Forward QA form 1 to QA Office when the material has been issued for installation.	CMPO/CMH

6.3.6 Authorized Material Certification Activities. This section provides a list of those activities that are currently authorized or have been authorized previously to receipt inspect and accept SUBSAFE, Level I and SFCC controlled materials. This list is provided as a reference to be used in performance of receipt inspections of paragraph 6.3.4 of this chapter.

6.3.6.1 Currently or Previously Authorized Material Certification Activities.

a. For material ordered from NAVICP by forces afloat for SUBSAFE/Level I applications. The following activities are authorized to receipt inspect and stock material for the LI/SS Stock Program:

Activity	Identification Code
Portsmouth Naval Shipyard	A
Naval Weapons Station Yorktown	YT

b. If material is not available through the activities listed in paragraph 6.3.6.1.a. of this chapter, NAVSEA has authorized the following activities to certify material as SUBSAFE in accordance with reference (a) and this material may be used for SUBSAFE applications without further receipt inspection, other than normal receipt inspection of paragraph 6.3.4.5.q. of this chapter. The activities and their designator are:

Activity	Identification Code
Newport News Shipbuilding	NN
Naval Undersea Warfare Systems Center - Newport (NUWC)	NUSC
Norfolk Naval Shipyard	N
Charleston Naval Shipyard	C
Puget Sound Naval Shipyard	S
Pearl Harbor Naval Shipyard	P
General Dynamics/Electric Boat Division	G
Philadelphia Naval Shipyard (Level I castings only)	H
Naval Surface Warfare Center, Carderock Division	QQ

c. Listed below are some of the Level I activity designators assigned by NAVSEA to various activities.

Activity	Identification Code
Naval Shipyard	
Charleston	C
Long Beach	L
Mare Island	MS
Norfolk	N
Pearl Harbor	P
Philadelphia	H
Portsmouth	A
Puget Sound	S
Supervisor of Shipbuilding	
Groton	SSG

Activity	Identification Code
Naval Weapons Station	
Naval Surface Warfare Center Division, Crane	WQC
Naval Surface Warfare Center Ordnance Station, Louisville	NSL
Naval Weapons Station, Yorktown	YT
Other NAVSEA Activities	
Other	JCR
SRF, Guam	SRFG
SRF, Yokosuka	SRFY
Naval Undersea Warfare Center Detachment, New London	NUWC
Naval Inventory Control Point (formerly Navy Ships Parts Control Center)	X
Naval Submarine Support Facility, NLON	SFNL
Submarine Base, Pearl Harbor	SBPH
TRIDENT Refit Facility, Kings Bay	TRFK
TRIDENT Refit Facility, Bangor	TRFB
SIMAs/Tenders	AS-32, 33, 34, 36, 37, 39, 40, 41, etc.

d. For Submarine Flight Critical Components, the following activities are authorized for testing and certification:

Activity	Identification Code
General Dynamics/Electric Boat Division	G
Charles Stark Draper Laboratory, Inc.	QDF

6.3.7 Marking of Level I/SUBSAFE Stock Program Material and Controlled Material.

6.3.7.1 General Requirements. LI/SS Stock Program Material passes from the manufacturers into the Navy supply system by way of Navy receipt inspection activities, which examine the material and subject it to a number of tests. Level I and SUBSAFE material which meets acceptance criteria is marked with a permanent MIC number.

SUBSAFE material supplied by the shipyard as onboard repair parts during new construction is required to be MIC marked. On older ships, the SUBSAFE material supplied as onboard repair parts during new construction may not have been MIC marked, but will be listed on the Supervisor of Shipbuilding's letter of certified material.

a. The purpose of MIC marking is four-fold:

(1) To denote that the marked material has been inspected, verified and accepted.

(2) To verify the material in hand by comparing it to the applicable drawings, plans, ordering requirements, and installing documents.

(3) To provide traceability from the installed material to OQE.

(4) To preclude complete re-inspection of material accepted by an approved activity.

b. Two problems arise in application that can defeat the purpose of the MIC marking:

(1) Internal components of an assembly which is MIC marked on the exterior, are usually not marked individually, and can lose their identity as LI/SS material, if separated during disassembly. Strict adherence to "bag and tag" requirements, using fleet QA forms, overcomes this problem. Any part that becomes separated from its QA form (a loss of traceability) must be treated as uncontrolled material.

(2) Reference (a) permits the use of shortened MIC numbers in cases where the entire marking cannot be applied due to space limitations. It is possible that some LI/SS material will lack the traceability number providing the critical link to the OQE, which in turn serves as the basis for the designation "LI/SS material or controlled material". This problem is circumvented by a tag affixed by the receipt inspection activity directly to the material or to its container, which lists the complete MIC number. The complete MIC marking is recorded during receipt inspection. Although the complete MIC marking would not be visible once the item was installed, traceability is maintained through the retained QA paperwork and tags associated with the job, which will list the full MIC number.

c. SUBSAFE castings and aluminum bronze components receive a permanent <SS> marking.

d. The MIC and SUBSAFE markings are in addition to the required manufacturer's marking.

e. Altering of a MIC marking is prohibited except to make documented corrections.

f. Method of marking controlled material. Physical marking methods are described in references (a) and (j).

g. Items not physically capable of being marked. Items such as small parts are packaged in homogeneous lots (i.e., same heat, batch or melt; and same vendor traceability) and the package is marked. If the package is opened, the individual items removed must be tagged with QA form 2. The remaining items in the package will be controlled by the use of a single QA form 2 attached to the package.

6.3.7.2 Level I and SUBSAFE Material. Level I and SUBSAFE material has a MIC marking affixed to it by the activities which certify the material for the Navy supply system. The activities are listed in paragraph 6.3.6 of this chapter. Authorized FMAs may apply a MIC marking to a component prior to installation in a ship. MIC markings will be applied in accordance with reference (a). The following paragraphs provide general guidance regarding MIC marks and marking:

a. Elements of the MIC Marking. The normal MIC marking consists of three elements:

(1) Material designator. The material designation comes from Volume II of reference (a) with the two or three letter code (e.g., SS, KMA).

NOTE: MIC MARKINGS ON OLDER STOCK PIPING MATERIAL, VALVES, FITTINGS, ETC., RECEIVED FROM THE SUPPLY SYSTEM MAY CONTAIN FOUR LETTER MATERIAL DESIGNATORS. FOUR LETTER MIC MARKING MATERIAL DEFINITIONS ARE CONTAINED IN VOLUME II OF REFERENCE (a).

(2) Traceability number. The traceability number is used by the marking activity to relate the piece to inspection records and consists of the last two digits of the year, Julian date when the material was inspected, a hyphen and lot number (e.g., 89364-043).

(3) Certifying Activity Designator (CAD). The CAD denotes the activity that performed the certification testing and marking. The CAD indicates acceptance of the material. Only the government activities and private shipyards which are authorized by NAVSEA to certify inspect and mark Level I material are assigned CADs. NAVSEA periodically issues a letter containing the list and identity code of government activities and private shipyards authorized to certify Level I material. A listing of those activities authorized to certify Level I material is provided in paragraph 6.3.6 of this chapter.

b. If all the markings cannot be affixed because of space limitations, then they are affixed in accordance with reference (a).

c. Sample MIC Markings. Three marking systems are in effect. Samples of MIC marks affixed to non-nuclear Level I and SUBSAFE material from each of the marking systems follow:

(1) <u>CNB-91301-123 TRFB</u> (Level I material, new marking system)

CNB Material code. 70/30 copper nickel (from the Material Designator Catalog)	91301 Julian date of inspection	123 Inspection lot number (3 digits maximum)	TRFB Inspection Activity (TRIDENT Refit Facility, Bangor)

(2) <u>KMD-90204-123 A</u> (SUBSAFE material, new marking system)

KMD Material code. K monel (from the Material Designator Catalog)	90204 Julian date of inspection	123 Inspection lot number (3 digits maximum)	A Inspection Activity (Portsmouth Naval Shipyard)

(3) <u>7150 001 A VBA</u> (Level I material, old marking system)

7150 Julian Date of inspection	001 Inspection lot number	A Inspection activity (Portsmouth Naval Shipyard)	VBA Material code. Valve bronze alloy

(4) 7100 005 CNB (Level I material, old marking system)

7100	005	CNB
Julian date of inspection	Inspection lot number	Material code. Copper nickel alloy

(5) SER 1991-921A <SS> (Marked by Portsmouth Naval Shipyard)

SER 1991-921A-061 <SS> (Marked by Naval Surface Warfare Center, Carderock Division (Submarine Antenna Engineering Directorate) (previously NAVSSES, Philadelphia))

d. Examples of SUBSAFE MIC marks for periscope and antenna parts marked prior to 31 July 1979:

(1) CSA 7041-001 P (Level I material, old marking system)

7150 Material code. Carbon steel alloy	001 Julian date of inspection	A Inspection lot number (3 digits maximum)	VBA Inspection Activity (Pearl Harbor Naval Shipyard)

(2) NCD 8249-584 QQ <SS> (SUBSAFE material, old marking system)

NCD Material code Nickel copper alloy	8249 Julian date of inspection	584 Inspection lot number (3 digits maximum)	QQ Inspection Activity (Naval Surface Warfare Center, Carderock Division)

(3) SER 1991-921A-AS18

FMA marking applied to previously unmarked SUBSAFE antenna, mast or periscope parts documented by receipt inspection record (QA form 1) as being received prior to 31 July 1979 or are parts removed from an antenna, mast or periscope from an in-service SUBSAFE certified submarine.

(4) Fasteners are identified and color coded in accordance with Appendix C of reference (a).

6.3.7.3 Assignment of Material Identification and Control Numbers for Items Manufactured from Certified Raw Materials.

NOTE: HEADED FASTENERS (CAPSCREWS, BOLTS, MACHINE SCREWS, ETC.) MANUFACTURED FROM LEVEL I MATERIAL REQUIRE ADDITIONAL TESTING (i.e., WEDGE TENSILE OR AXIAL TENSILE TESTING AND HARDNESS TESTING).

a. Level I items manufactured using certified Level I raw material (e.g., barstock, plate, forged shape) except fasteners with heads may be assigned the same MIC markings as the raw stock provided no work is done on the base material that would alter its chemical, physical or mechanical properties (machining and welding may be done).

b. Headed fasteners will be assigned a unique MIC marking following local manufacture from existing Level I material and satisfactory completion of certification testing. A DFS is required if certification testing is not completed.

NOTE: A NEW MIC MARKING SHALL BE ADDED WHENEVER LEVEL I MATERIAL IS HEAT TREATED OR WORKED IN SUCH A WAY AS TO ALTER CHEMICAL, PHYSICAL OR MECHANICAL PROPERTIES. THE NEW MIC NUMBER SHALL PROVIDE TRACEABILITY TO THE ORIGINAL MIC NUMBER AND RECERTIFICATION TEST REPORTS FOR CHEMICAL, PHYSICAL OR MECHANICAL PROPERTIES.

c. The following procedures will be used by a FMA authorized to certify and assign MIC markings, in accordance with reference (a), to items manufactured from certified raw material that have had their chemical, physical or mechanical properties altered:

(1) Prepare a new QA form 1 for each new item.

(a) Complete Blocks 1, 2, 5, and 6 of QA form 1.

(b) Blocks 7 and 8 of QA form 1 will be marked “NA”.

(c) In Block 9 of QA form 1, check “no”, then print name, sign and date.

(d) Enter the appropriate codes for the required tests and inspections in Block 10 of QA form 1.

(e) Enter signed and dated statements in Block 11 of the QA form 1 that provides:

1 The MIC number of the raw material and CWP serial number used in manufacture, inspection and test of the item.

2 The results of the tests and inspections designated in Block 10 of QA form 1.

(f) Check the appropriate boxes in Blocks 12, 13 and 14, print name and sign Block 15 of QA form 1.

(g) If the item was found to be acceptable and certified to the appropriate Level of Essentiality, assign a new MIC number in the format shown in paragraphs 6.3.7.2.c.(1) or (2) of this chapter for non-nuclear material.

1 Volume II of reference (a) should be consulted for the material designator since the fabrication processes may have altered the material.

2 The date will be the date that the MIC number is assigned.

3 Each item manufactured will be assigned a lot number and the appropriate test and inspection records for that item will be annotated with the lot number to ensure traceability.

(2) Complete the new QA form 2 using the new MIC number.

(a) Mark the certified material with the new MIC markings in accordance with paragraph 6.3.7.2 of this chapter. Block 5 of QA form 2 will be N/A.

(b) Remove the original QA form 2 with the raw stock MIC number. Enter a statement in the installation block that the item has been certified and the new MIC number that was assigned. The tag should then be filed with the new QA form 1.

6.3.8 Level I/SUBSAFE Submarine Flight Critical Component Stock Program Material Downgrading.

NOTE: MATERIAL CODED AS SS DOES NOT REQUIRE DOWNGRADING FOR USE IN LEVEL I APPLICATIONS.

6.3.8.1 Material Downgrading. Occasionally LI/SS/SFCC Stock Program controlled material must be downgraded in order to support training or production work due to the non-availability of uncertified material. In order to maintain accountability of the end use of LI/SS/SFCC Stock Program controlled material, the following procedure is required:

Procedure	Responsibility
For LI/SS/SFCC, obtain written authorization to downgrade the material from the QAO.	Leading Petty Officer/Work Center Supervisor
Remove all MIC markings from the LI/SS material and SMIC markings from SFCC as well as controlled material tags and forms. The QA forms will be forwarded to the QAO (ship) or QA office (FMA) with the approved authorization.	CMPO/CMH

6.3.9 Storage, Issue, and Handling of Level I/SUBSAFE/Scope of Certification/Submarine Flight Critical Component Stock Program Material.

6.3.9.1 Storage Requirements.

a. The supply department onboard the FMA or a ship will stow, handle and issue LI/SS/SOC/SFCC stock program material as required by the governing NAVSEA, NAVICP, or NAVSUP instruction.

NOTE: LI/SS/SOC/SFCC STOCK PROGRAM MATERIAL BECOMES CONTROLLED MATERIAL, FOR THE PURPOSES OF THIS MANUAL, WHEN THE MATERIAL HAS BEEN RECEIVED BY THE CMPO OF THE WORK CENTER OR DIVISION.

b. Controlled material in the custody of customers (ship or FMA work centers) will be segregated by a physical barrier, in clearly marked, dry, secure, clean stowage and handling areas.

(1) Use of separate boxes, shelves, roped off or marked (e.g., painted lines) areas are acceptable methods of segregation/stowage, provided they are clearly marked, allowing separation of the following materials:

(a) SUBSAFE.

(b) Level I.

(c) SFCC.

(d) SOC A and B and C.

(e) Material undergoing receipt inspection.

(f) Rejected materials.

(g) Material staged for a specific job or process. Controlled materials of different Levels of Essentiality and non-controlled material may be co-located when staging materials for a specific job as long as all identification tags attached to the material are annotated with the same Job Control Number.

(2) These materials must be segregated from each other and from other materials. Segregation will be maintained from receipt through staging. Unidentified material or rejected material will be segregated from acceptable controlled material. Access to controlled material will be positively controlled.

(3) Level I materials of different material types, grades or condition shall be segregated through physical separation unless readily differentiated by other attributes, such as size or physical appearance. When physical segregation cannot be accomplished, an alternative positive system of control shall be used. The method used shall assure that different materials that appear to be similar are not mixed (unless the materials are approved alternates for each other as indicated by part or stock number).

c. Controlled material will be handled and stored in a manner to prevent damage and be sealed for cleanliness when applicable (e.g., Oxygen Clean).

d. Material received, or modified after receipt, not meeting the receipt inspection requirements of paragraph 6.3.4 of this chapter will be rejected, tagged with QA form 3, and placed in segregated controlled stowage to await disposition. Disposition examples:

(1) Disposal.

(2) Repair.

(3) Retention of components for future use.

e. Material awaiting receipt inspection will be segregated from material accepted or material rejected.

f. CMPOs will inspect controlled material storage areas of their work center, semi-annually as a minimum to ensure:

(1) Material is in designated area.

(2) Material is properly identified.

(3) Material is properly marked and tagged.

(4) Material is protected from damage.

(5) Material is kept clean.

(6) Material is segregated as required.

6.3.9.2 Staging Requirements. Controlled materials of different Levels of Essentiality and non-controlled material may be co-located when staging material for a specific job provided that:

a. All QA forms or identification tags attached to the material are annotated with the same Job Control Number.

b. Material is segregated from material staged for other jobs or processes.

6.3.9.3 Issue of Level I/SUBSAFE/Scope of Certification/Submarine Flight Critical Component Controlled Material. LI/SS/SOC controlled material issue will be restricted to those specific applications that have controlled material requirements. SFCC controlled material may be issued for non-Flight Critical applications without written authorization but must not be subsequently installed into components within the SFCC Certification Boundary.

6.3.9.4 Handling of Material. All controlled material received by a work center, whether received from the supply department as onboard stock, work center stores or from a tended ship must be controlled as required by reference (a) for SUBSAFE/Level I, reference (b) for SOC or reference (c) for SFCC.

a. Controlled material must at all times be in physical custody of either the work center CMPO, QAI, a craftsman or stowed in a work center controlled material stowage area.

b. Lots of material (e.g., box of bolts) broken down for end use, will maintain the same identification and control as the parent controlled item using QA form 2 as appropriate.

c. The QA form 2, and/or any other identification must stay with the material at all times until it is installed or reinstalled in the system or returned to the custody of Ship's Force.

d. Transfer of a MIC marking during issue of barstock or pipe will be accomplished by transferring the MIC to a new location on the piece to be sectioned, and be verified by the work center CMPO/CMH or a QAI before the original marking is lost.

e. If, during fabrication, the original piece must be broken down (such as cutting off a piece of barstock) or the MIC marking will be lost by machining, welding, etc., the proper material identification markings will be transferred to the piece(s) prior to cutting or to the container, in case of small parts, and QA form 2 will be attached to each new piece.

f. On completion of shop/ship fabrication or assembly stage, the QAI will check the finished product against the attached material identification tags for required material markings. The QAI will inspect the finished product for conformance to specifications. If satisfactory and if the required marking is present the QAI will print name and sign the QA form 2.

g. If for any reason at any time the product fails inspection, the QAI will reject the material, attach QA form 3 and inform the QAO.

h. The lead work center will be responsible for installation and the final acceptance block on all QA forms associated with a particular product. Assist work centers or divisions will be responsible for control of material that they use on a job.

i. Material consumed (e.g., welding electrode, brazing alloy) or installed (e.g., studs, valve ball) in the repair process must have its identity (MIC number, type or grade of the material) recorded on the appropriate QA form (e.g., QA form 18, QA form 20, QA form 34).

j. For previously installed material in a SUBSAFE, Level I, SOC or SFCC system which is removed and is to be re-installed, positive control and identification of the material shall be maintained from removal through reinstallation by use of a QA form 2. Non-controlled material will be tagged with a QA form 2 or other positive means of traceability until reinstallation.

k. Damaged existing material removed from a SUBSAFE, Level I, SOC or SFCC system which will not be repaired or reused, and is immediately disposed of as trash, does not require a QA form 2 or QA form 3 to be attached. All MIC markings on damaged material that meets this criterion shall be removed prior to disposal to prevent inadvertent reuse. If there is any potential for repair or re-use of the removed material, then paragraph 6.3.9.4.j applies and QA form 2 must be attached. Do not remove

MIC numbers from controlled material that is required to be turned-in. Damaged controlled material that is required to be turned-in, such as depot level repairable items, shall be rejected using the QA form 3 process.

l. All material, parts or components from controlled systems which are removed from the ship by Ship's Force, to be worked by the FMA, must have a QA form 2 properly filled out and attached. If it is necessary for the FMA to disassemble such components, identification must be retained on each part which is controlled material using additional QA form 2. The original QA form 2 will remain with the part or component until it is re-installed in the ship.

m. Material control tags (i.e., QA forms 2) shall be used to positively identify controlled material in transit to avoid unauthorized movement, co-mingling and improper use.

n. Each controlled component removed from a ship's system in order to allow repair/maintenance will be tagged with QA form 2 to maintain identification and traceability. Controlled components (e.g., periscopes, valves and valve bonnets, pumps, etc.) disassembled and reassembled in a temporary controlled jobsite (established in a work space or at a jobsite) do not require individual QA tags to be filled out and attached to each controlled component (controlled components are defined in reference (a)), provided that:

(1) Access to the temporary controlled jobsite is controlled by a physical boundary and is marked with a posted sign stating "Temporary Controlled Jobsite".

(2) Rejected material must be identified, tagged with QA form 3 and removed from the area.

(3) Work must be actively in progress and not be longer than a shift or one normal working day on a job site vice in a FMA repair shop.

6.3.9.5 Maintaining Accountability. All controlled material received by a work center and stored in a controlled material locker shall have an attached QA form 2 and may have an associated QA form 1. The following process shall be used when issuing material:

Procedure	Responsibility
Issuing a lot (single or multiple items) with no material remaining:	
Update original existing QA form 2 to annotate the Name of the craftsman and workcenter or shop or organization the material is issued to.	CMPO
Update associated QA form 1 (if applicable) in accordance with QA form 1 instructions. Submit the associated QA form 1 with zero amount remaining to the QAO.	CMPO
Issuing a portion of a lot with material remaining:	
Initiate a new QA form 2 for each quantity less than the entire lot of material to be issued specifically annotating the amount to be issued. Annotate the Name of the craftsman and workcenter or shop or organization the material is issued to. Do not modify the original QA form 2.	CMPO

Update associated QA form 1 to annotate amount issued and amount remaining in accordance with QA form 1 instructions.	CMPO
When the last material of a lot is issued, destroy the original QA form 2 with zero amount remaining. Submit the associated QA form 1 with zero amount remaining to the QAO.	CMPO

VOLUME V

PART I

CHAPTER 7

TESTING REQUIREMENTS

REFERENCES.

(a) NAVSEA 0387-LP-046-8000 - System Hydrostatic Test Requirements
(b) NAVSEA S9505-AF-MMA-010 - Submarine Non-Nuclear Piping Systems Test Manual
(c) NAVSEA S9086-RK-STM-010 - NSTM Chapter 505 (Piping Systems)
(d) NAVSEA S9074-AR-GIB-010/278 - Requirements for Fabrication Welding and Inspection, and Casting Inspection and Repair for Machinery, Piping and Pressure Vessels
(e) NAVSEA S9086-RJ-STM-010 - NSTM Chapter 504 (Pressure, Temperature and other Mechanical and Electromechanical Measuring Instruments)
(f) NAVSEA T9044-AD-MAN-010 - Requirements Manual for Submarine Fly-By-Wire Ship Control Systems
(g) NAVSEA S9221-C1-GTP-010/020 - Main Boiler Repair and Overhaul, Volumes I and II
(h) NAVSEA 0989-LP-037-2000 - Commissioned Submarine General Reactor Plant Overhaul and Repair Specification
(i) NAVSEA 0989-LP-043-0000 - Commissioned Surface Ship General Reactor Plant Overhaul and Repair Specification
(j) NAVSEA S9086-XG-STM-010 - NSTM Chapter 700 (Shipboard Ammunition Handling and Storage)
(k) NAVSEA 0924-LP-062-0010 - Submarine Safety (SUBSAFE) Requirements Manual
(l) NAVSEA 0902-018-2010 - General Overhaul Specifications for Deep Diving SSBN/SSN Submarines (DDGOS)
(m) NAVSEA 0989-LP-058-0000 - AS/AD Tender Nuclear Support Facilities Preventive Maintenance Index
(n) NAVSEA 0900-LP-001-7000 - Fabrication and Inspection of Brazed Piping Systems
(o) MIL-STD-1330 - Standard Practice for Precision Cleaning and Testing of Shipboard Oxygen, Helium, Helium-Oxygen, Nitrogen and Hydrogen Systems
(p) NAVSEA S9086-CN-STM-040 - NSTM Chapter 079 V4 (Damage Control; Compartment Testing and Inspection)
(q) NAVSEA T9512-AC-TRQ-010 SS/SSN/SSBN - Submarine Snorkel Systems

LISTING OF APPENDICES.

A Testing Requirements for Surface Ship Systems
B Testing Requirements for Submarine Systems
C SUBMEPP Product Feedback

7.1 GENERAL. Testing is a key element in the certification process of work accomplished by Ship's Force, Fleet Maintenance Activities (FMA), shipyards and private organizations on submarines or surface ships. It is the final physical check that the system or component has been returned to its normal operational state and will function as designed. Excessive re-testing of system components will cause unnecessary cycling stresses on system components and is not desired. Test only what you fix.

NOTE: THE PRESSURE TEST REQUIREMENTS FOR REACTOR PLANT FLUID SYSTEMS ARE DELINEATED IN REFERENCE (a).

7.1.1 Testing Requirements for Systems, Portions of Systems and Components. Research is necessary to determine all applicable test requirements prior to conducting repairs. It is important to note that all required tests may not be identified by a single source (e.g., a fitting or component that has been manufactured locally will have to satisfy both the testing required by the original manufacturing specifications as well as any installation tests). Unless specific guidance to the contrary is given, the following requirements will be followed:

a. Shipboard (in place) testing. The following requirements apply:

(1) All valve lineups and operations necessary to meet the testing requirements and performance of the test will be accomplished by Ship's Force.

(2) The FMA will provide the test equipment required for in place testing, if requested.

(3) For testing to recertify FMA work, the FMA will provide Ship's Force with the test requirements, Quality Assurance (QA) data forms for Controlled Work Packages (CWP) only, and list of affected joints (if applicable). The FMA will review the test records to verify the satisfactory accomplishment of the test(s) and maintain the original Objective Quality Evidence (OQE) in the FMA CWP for testing to re-certify work.

(4) The System Test Check List of Volume IV, Chapter 9 of this manual will be used in the preparation, conduct, and recovery from hydrostatic tests and tests above normal operating pressure when an external pressure source is required.

b. Shop or bench testing. To the maximum extent possible, all components to be installed in a ship's system will be work center or bench tested and/or inspected prior to installation, when required. This includes weld joint radiography, strength tests of welds or manufactured pressure boundary parts, valve seat leakage tests, etc. This results in a reduced number of cyclic stresses on the systems. The applicable portions of the System Test Check List of Volume IV, Chapter 9 of this manual will be used in preparation, conduct, and recovery from shop hydrostatic testing. QA form 28 will be used to document the OQE for shop testing.

c. Hydrostatic/pneumatic testing. A QA form 26 will be used to document the OQE that the hydrostatic/pneumatic testing was completed satisfactorily. Nuclear hydrostatic/joint/pneumatic testing will be in accordance with reference (a) and paragraph 7.5.1 of this chapter. Non-nuclear hydrostatic/joint/pneumatic testing will be in accordance with reference (b) and (c) and Section 7.2 of this chapter.

d. Miscellaneous testing, such as operational testing, will be documented on a QA form 17.

e. Drop testing. Used to test the integrity of a system by applying pressure and holding for a specified time and correcting the pressure drop for temperature changes. A QA form 27 will be used to document the OQE that the drop test was completed satisfactorily.

f. Nondestructive Testing (NDT). Used to determine the integrity of metals with no detrimental effects to the subject metal. Specific guidance on NDT and required OQE is contained in reference (d) and Part I, Chapter 11 of this volume.

g. Test instrumentation. Test instrumentation will be in accordance with the source documents.

(1) Installed master/primary and backup test pressure gages, including shop hydrostatic test stands, must be calibrated for accuracy as required by references (a), (c) and (e). These references may not include special test gage requirements and other source documents (e.g., Reactor Plant Manual (RPM), special test procedures, maintenance and replacement instruction requirements) may have to be consulted.

(2) Non-nuclear test instruments will be in accordance with references (c) and (e).

h. Duration of tests. The duration of a shop or shipboard test will normally be established by the applicable technical reference (e.g., Test Pressure Drawing (TPD), technical manual, RPM, maintenance and replacement instructions), references (b) and (c) for non-nuclear piping systems, or reference (a) for nuclear systems. The following are general guidelines for duration of tests:

(1) Mechanical joint tightness tests. All operating pressure tests performed to verify the integrity of a remade mechanical joint, which has only software (e.g., flexitallic gasket, gasket, O-ring) replaced, a 30 minute soak period at test pressure prior to commencement of inspections is required to permit weepage or seepage to accumulate.

(2) Strength and porosity tests. Tests performed in accordance with references (a) or (b) and (c) to verify the integrity of untested pressure boundary parts (e.g., flanges, bonnets, valve cartridges) or newly brazed or welded joints shall be soaked at test pressure for a minimum of 30 minutes prior to commencement of inspections.

(3) Periodic system hydrostatic tests. Periodic hydrostatic tests performed to verify the integrity and leak tightness of entire systems shall be conducted in accordance with references (b) and (c), which require a minimum 30 minute soak at test pressure prior to commencement of inspections.

(4) Operational tests. All operational tests performed to assure that all items, components, controls and indications function as designed and in accordance with specifications will be conducted for as long as required to prove the operability of the item being tested.

(5) The pressurization time prior to commencing inspections for leakage may be reduced from the normal 30 minute period when pressurization for 30 minutes using installed system equipment is impractical or undesirable (e.g., to avoid generation of radioactive liquid waste or hazardous waste, to avoid undesirable start/stop cycling of the normal system pressure source). In such cases where no minimum pressurization time is specified or it is impractical, maintain pressure for at least five minutes before inspecting joints.

(6) When performing operating pressure tests on gas systems (e.g., air, oxygen, nitrogen) using a soap bubble leak test method, a 15 minute hold period at test pressure is required. If system configuration makes it impossible to pressurize the joints continuously for 15 minutes, they should be pressurized for as long as possible.

i. Testing of valve stems. Replaced stems in non-nuclear valves do not require a strength/porosity test, but the re-assembled valves do require a mechanical joint tightness test after assembly as discussed in reference (c). This includes stems manufactured by an FMA from certified Level I barstock.

j. Testing of new flanged valves received without drilled bolt holes. New valves (e.g., Submarine Safety (SUBSAFE), Level I, nuclear ready for issue, and other valves received with certification) without bolt holes in the flanges require only mechanical joint tightness and operational testing in system, not strength testing, following machining bolt holes into flanges.

k. Following routine maintenance and repair work performed on submarine Fly-By-Wire Ship Control Systems in accordance with submarine class maintenance plan, testing shall be performed as identified in class Fly-By-Wire Ship Control System Technical Work Document and reference (f). Work impacting Unrestricted Operations/Maintenance Requirement Card 019 measured parameters shall invoke conduct of applicable portions of Unrestricted Operations/Maintenance Requirement Card 019.

7.2 TESTING.

7.2.1 Test Procedures. Non-nuclear testing will comply with the detailed system/component plans of the source documents. TPDs have been developed for some classes of ships and contain strength test pressures, designated as "H" on the TPD, and mechanical joint tightness test pressures, designated as "J" on the TPD, for all portions of piping systems. Revisions and modifications to TPDs are documented in the SUBMEPP Strength and Tightness Standardized Test Procedure between periodic revisions to the TPDs. The Test Procedure should be reviewed for changes to the TPD. If TPDs do not exist, and test pressures are not identified on applicable system drawings, particular attention must be devoted to system design pressures and configuration. Technical Repair Standard (TRS)/Maintenance Standard (MS) provide requirements for testing of many piping system components and generally are the source document for testing of those components. General guidelines for use of TPD "H" or "J" pressures and Appendices A and B Column 1 or Column 2 pressures are:

a. TPD "H" or Appendices A and B Column 1 pressure is used following:

(1) Major repairs.

(2) Installation of new piping, components or fittings that have not been previously strength tested. DO NOT assume that new uncontrolled material from the Navy Supply System has been previously strength tested. Exceptions to the strength test requirement exist only for reduced energy criteria systems, installation of approved mechanically attached fittings, seals (gaskets, including pressure seal rings and O-rings), fasteners, valve stems and material meeting the requirements of Note 1 below. A strength test is not required if the end user obtains adequate documentation that a strength test has been previously completed for a specific item.

(3) (Submarines only) Re-making the mechanical joint between the hull and hull valve.

NOTE: "H" PRESSURE TESTING FOR NEW MATERIAL IS NOT REQUIRED IF ALL THE FOLLOWING ARE MET:

1. MATERIAL IS SUBSAFE SPECIAL MATERIAL IDENTIFICATION CODE (SMIC) OR LEVEL I MATERIAL RECEIVED FROM THE NAVY SUPPLY SYSTEM PROPERLY MARKED.

2. A SATISFACTORY RECEIPT INSPECTION IS COMPLETED BY THE END USER.

3. MATERIAL IS RECEIVED IN THE CONFIGURATION REQUIRED FOR USE WITHOUT REQUIRING ADDITIONAL MACHINING, WELDING OR OTHER MAJOR REPAIR. (BAR, INGOTS, PLATE, FORGINGS, ETC., WHICH ARE MACHINED, WELDED OR HAVE A MAJOR REPAIR, REQUIRE AN "H" PRESSURE TEST TO CERTIFY THE COMPONENT.)

b. TPD "J" or Appendices A and B Column 2 pressure is used following:

(1) Minor repairs.

(2) Re-made mechanical joints meeting requirements of reference (c).

(3) Repairs, replacements and modifications of piping, components and fittings in reduced energy criteria systems (those operating at 200 psig or less and 200°F or less); the work must meet all applicable specifications and requirements and satisfactorily pass all other required non-destructive testing.

(4) Installation of approved mechanically attached fittings meeting the requirements of reference (c).

7.2.2 Test Requirements. The following requirements pertain to non-nuclear testing:

a. Reference (b), (c) and (e) contain the test rig, test gauges, and testing procedure requirements for performing non-nuclear testing. Additionally, ship or system specific manuals such as a Steam Plant Manual should be consulted where applicable. Test, Measuring and Diagnostic Equipment documentation for operating pressure tests is not required if normally installed system gages are used.

b. When a test gauge is not listed in reference (e), a gauge where the test pressure falls within 50-90% of the gauge range will be used (not applicable for operating pressure tests using normally installed system gages).

c. Portions of systems that are not designed for full test pressure will be isolated and provided with a relief or vent path to prevent over pressurization during testing.

d. Hydrostatic/pneumatic test results will be documented on a QA form 26 and system drop tests will be documented on a QA form 27. Miscellaneous testing will be documented on a QA form 17.

e. Where test requirements cannot be met, a Departure from Specification (DFS) will be processed in accordance with Part I, Chapter 8 of this volume.

f. Shop test of replacement components will be conducted in accordance with reference (c).

g. Renewal or replacement of non-nuclear mechanical joint fasteners. If mechanical joint fasteners are removed and re-installed or replaced one at a time, torqued in accordance with an approved procedure and using approved thread lubricants, the integrity of the mechanical joint has not been violated and a test for strength or tightness is not required. For submarines, this applies to joints both within and outside of hull integrity areas. Replacement shall be controlled by a Technical Work Document.

7.2.3 Test Pressure Source References. Mechanical joint tightness tests are performed to test work performed on piping systems and components. The following list provides typical documents used to determine test pressures and operational requirements:

a. TPD. The applicable TPD, if promulgated for a particular class of ship, can be found through the use of the TPD Index or Ship's Drawing Index or referenced in the Record of Shipboard Tests.

b. RPM.

c. Steam and Electric Plant Manual Maintenance and Replacement Instructions requirements.

d. Component technical manual.

e. Ship valves technical manual.

f. Ship System Manual.

g. Naval Ships' Technical Manual (NSTM) chapter dealing with the appropriate system.

h. Record of Shipboard Tests.

i. Standardized Class Shipboard Test Procedures.

j. System diagrams/drawings.

k. Vendor drawings.

l. Submarine MSs.

m. Steam Plant Manual.

n. Boiler Repair Manual (reference (g)).

o. References (a), (b), (c), (d), (h), (i), (j), (k) and (l) of this chapter. In each case, every effort should be made to conform to the latest applicable specifications and detailed test requirements.

7.2.4 Non-Nuclear Pressure Drop Tests. (Submarines only)

7.2.4.1 General Instructions.

a. When accomplishing pneumatic mechanical joint tightness tests on air/compressed gas systems, tanks and/or compartments as specified by the procedure, pressurize the space/system with the test medium (air, nitrogen, etc.) to the pressure specified. Isolate the test rig from the test area and allow the system to stabilize and remain isolated for the specified amount of time. The actual drop in test pressure corrected for temperature change must be calculated.

b. This method of testing may also be used when testing valves for tightness/seat tightness using water. When test pressure is reached, lock in test pressure and isolate the pressure source from the test rig, and allow the system to stabilize and remain isolated for the specified amount of time. Acceptance criteria is no drop in pressure over the specified time (unless a specific drop in pressure is specified). Test duration shall be as specified in the TWD. Generally calculations for correction due to temperature changes are not required.

7.2.4.2 Calculations.

a. METHOD: Pressure Drop, (psi) Temperature Corrected = $\frac{(P_1 + 14.7)(T_2 + 460)}{(T_1 + 460)} - (P2 + 14.7)$

WHERE:

T_1 = Initial Measured Temperature ^oF

T_2 = Final Measured Temperature ^oF

P_1 = Initial Measured Pressure, psig from Test Gage

P_2 = Final Measured Pressure, psig from Test Gage

14.7 = Atmospheric Pressure, psi (added to gage pressure to convert to absolute pressure)

460 = Absolute Temperature Scale (added to Fahrenheit temperature to convert to absolute temperature)

b. The temperature value used for calculations must be the net effective temperature for the tested volume. For a submarine high pressure air system under test, most of the system gas is in the flasks located in the main ballast tanks. Therefore, temperatures most nearly representing the flask(s) internal temperature(s) are required. The net effective temperature of a high pressure air system on a waterborne submarine is calculated by a weighted average of temperatures using a weighing factor of nine (9) for sea water temperature and one (1) for average compartment temperature.

$$Tnet = \frac{(\text{SEA WATER TEMP X 9}) + (\text{COMPARTMENT TEMP})}{10}$$

7.2.4.3 Example. This paragraph provides a typical example of a Pressure Drop Test corrected for a temperature change:

Ships Air Bank Initial Pressure	4500 psig
* Sea Water Temperature Outside Ballast Tank at Start of Test	44°F
* Sea Water Temperature Outside Ballast Tank at End of Test	50°F
** Ship's Compartment Air Temperature at Start of Test	70°F
Ship's Compartment Air Temperature at End of Test	72°F
Ship's Air Bank Final Pressure	4520 psig

Allowable Pressure Drop in 24 Hours at 1 % 45 psi

$$\text{Actual Pressure Drop} = \frac{(P_1+14.7)(T_2+460)}{(T_1+460)} - (P_2 + 14.7)$$

$$T_1 \text{ Net} = \frac{(44 \text{ x } 9) + (70 \text{ x } 1)}{10} + 460 = 507$$

$$T_2 \text{ Net} = \frac{(50 \text{ x } 9) + (72 \text{ x } 1)}{10} + 460 = 512$$

$$\frac{(4500+14.7)\ (512)}{(507)} = 4559.2$$

Actual Pressure Drop = 4559.2 – 4534.7

= 24.5

RESULT: Final pressure drop in 24 hours corrected for temperature change is 24.5 psi, which is less than the allowable 45 psi; therefore, test is satisfactory.

* Sea water temperature should preferably be taken at one half (1/2) keel depth in proximity to air banks. For a ship in drydock, substitute air flask surface temperatures in the main ballast tanks in lieu of sea water temperatures.

** Compartment temperatures should be taken in close proximity to the air system piping and should include surface temperature of air flasks within compartments which are included in the test boundaries.

7.3 WEIGHT HANDLING EQUIPMENT.

7.3.1 Weight Handling Equipment. All weight handling equipment, fittings and fixtures, shall be tested and marked or tagged to indicate completion of test prior to being placed into service.

a. Shipboard Equipment. The following are sources of test procedures for shipboard equipment/systems that require tests upon completion of manufacture or repairs:

Equipment/System	Governing Document(s)
Davits	NSTM 583, Planned Maintenance System (PMS)
Cranes	NSTM 589, PMS
General stores & provisions handling (i.e., dumbwaiters, hoists, conveyors)	NSTM 572, PMS
Booms	NSTM 573, PMS
Underway replenishment	NSTM 571, PMS
Anchors & anchoring	NSTM 581, PMS
Elevators	NSTM 588, NSTM 772, PMS
Deck fittings	NSTM 9120, PMS
Deck edge safety nets	PMS, Naval Sea Systems Command (NAVSEA) Dwgs 53711-803-5000902 and 53711-803-5184097
Trunk nets	PMS, NAVSEA Dwg 53711-804-5184163
Ordnance handling	NAVSEA SG420-AP-MMA-010, NSTM 700
Slings: - General Purpose - Specialized	 NSTM 572 Per drawing or In-Service Engineering Activity guidance
Padeyes (temporary - installed for rigging purposes)	Install in accordance with NAVSEA S9AA0-AB-GOS-010
Portable weight handling equipment; chain falls (pneumatic/manual) and come-alongs	PMS, NSTM 572, ASME HST-3, MIL-H-904* *MIL-H-904 is inactive and used only for replacement parts. ASME HST-3 is used for new procurement.
Aircraft securing and engine run-up fittings	803-191630, PMS
Cargo tie down fittings	NSTM 572, PMS
Landing craft tie downs	NSTM 584, PMS
Vehicle tie downs	NSTM 575, PMS
Bridge cranes	NSTM 700
Hoists	NSTM 700

NOTE: PER NAVSEA DIRECTION, STATIC, DYNAMIC AND RATED LOAD TESTING OF MAIN STORAGE BATTERY LIFTING GEAR INSTALLED IN SUBMARINE BATTERY COMPARTMENTS IS NOT REQUIRED UNLESS REPAIRS TO STRUCTURAL OR WEIGHT SUPPORTING COMPONENTS HAVE BEEN ACCOMPLISHED. FOLLOWING REPAIRS, LOAD TESTING WILL BE ACCOMPLISHED DURING BATTERY REPLACEMENT AFTER THE BATTERY CELLS HAVE BEEN REMOVED.

b. Reactor plant and Nuclear Support Facility (NSF) lifting and handling equipment testing requirements.

(1) In addition to the respective ship class RPM, references (h) and (i) shall be consulted for reactor plant lifting and handling tests and inspection requirements.

(2) The applicable NAVSEA drawing, the respective ship class NSF manual and reference (m), specify the lifting and handling tests and inspection requirements for NSFs/CIFs.

7.4 EXEMPTIONS/ALTERNATIVE TEST REQUIREMENTS (NON-NUCLEAR).

7.4.1 General. In some instances, the required test may not be able to be performed. The following exemption/alternative tests have been developed in order to properly recertify the system or component. These tests are non-nuclear unless specifically addressed in nuclear technical documents. A DFS will be used to document non-performance of the required testing and/or deferral of certification of the system to an at sea test.

a. (Submarines only) Technical Work Documents for maintenance or repair of seawater interface systems which require a “J” pressure test, equivalent to test depth pressure, to certify the maintenance boundaries shall be closed prior to underway operations, if at sea, prior to operations below 200 feet. When controlled deep dive testing is required in lieu of a joint tightness test to “J” pressure, a QA form 12 shall be used to establish accountability for the controlled deep dive test.

b. (Submarines only) If a Maintenance Certification Record/Re-Entry Control is closed by transferring at sea testing to a DFS (e.g., controlled dive to test depth for test of a periscope hull gland, controlled dive for test of a sea connected system (e.g., Main Sea Water (MSW), Auxiliary Sea Water (ASW)) in lieu of joint tightness test to “J” pressure of TPD), the ship will be restricted to the requirements of Part I, Chapter 5, Section 5.10.5a of this volume until satisfactory completion of a controlled deep dive per Volume VI, Chapter 26 of this manual.

c. (Submarines only) If work on a non-controlled system requires an exception/alternative retest and/or at sea testing, the work shall be performed as follows:

(1) A Formal Work Package in accordance with Part I, Chapter 2 of this volume, (e.g., PMS Maintenance Requirement Card, technical manual pages, detailed maintenance outline), will be used to control and document all work performed.

(2) If a controlled assembly is required, the QA form 34 shall be retained per Part I, Chapter 10 of this volume. Controlled assembly requirements are:

(a) Verification that surface finishes of gasket/o-ring sealing surfaces are in accordance with applicable specifications.

(b) Verification that fastener material and installation is in accordance with applicable specifications.

(c) Verification that gaskets/o-rings are properly installed and in accordance with applicable specifications.

(d) Assembly is documented on a QA form 34.

(e) Inspected by a Quality Assurance Inspector or Quality Assurance Supervisor.

(3) If certification of the maintenance associated with the exception/alternative retest requires a controlled deep dive test in lieu of a joint tightness test to "J" pressure of TPD, the DFS will:

NOTE: THE DFS APPROVAL WILL BE IN ACCORDANCE WITH CHAPTER 8, PART I, PARAGRAPH 8.2.5.b OF THIS VOLUME TO IDENTIFY APPLICABLE RESTRICTIONS TO SHIP OPERATIONS (IF ANY) REQUIRED UNTIL SATISFACTORY COMPLETION OF THE CONTROLLED DEEP DIVE.

(a) Identify completion of the controlled assembly (if required).

(b) Identify results of the exception/alternative testing.

(c) Identify the at sea testing requirement(s) and acceptance criteria.

7.4.2 Exemptions/Alternatives to Test Requirements (Non-Nuclear unless Specifically Addressed in Nuclear Technical Documents).

NOTE: 1. "H" PRESSURE TESTING FOR NEW MATERIAL IS NOT REQUIRED IF BOTH THE FOLLOWING ARE MET:

1. MATERIAL IS SUBSAFE SMIC OR LEVEL I MATERIAL RECEIVED FROM THE NAVY SUPPLY SYSTEM PROPERLY MARKED.

2. A SATISFACTORY RECEIPT INSPECTION IS COMPLETED BY THE END USER.

NOTE: 2. MATERIAL IS RECEIVED IN THE CONFIGURATION REQUIRED FOR USE WITHOUT REQUIRING ADDITIONAL MACHINING, WELDING OR OTHER MAJOR REPAIR. (BAR, INGOTS, PLATE, FORGINGS, ETC., WHICH ARE MACHINED, WELDED OR HAVE A MAJOR REPAIR, REQUIRES A "H" PRESSURE TEST TO CERTIFY THE COMPONENT.)

a. Mechanical joints. For minor repairs on those mechanical joints previously strength tested (e.g., an "H" test has been conducted on the pressure boundary parts in the past) including hull joints, where system configuration makes mechanical joint tightness testing impractical, the following is considered a satisfactory alternate testing method.

(1) Perform a controlled assembly of the joint(s).

(2) Visually inspect the joint for leakage during first system pressurization to nominal/system operating pressure and document on a QA form 17.

(3) (Submarines only) For submarine sea connected systems, initiate a minor DFS to document the lack of retest. Clearance will require joints to be visually inspected at each incremental depth during the first controlled dive. No leakage is allowed.

b. Valve test. Following the in place repair of valves where configuration precludes mechanical joint tightness testing or seat tightness testing after minor repairs, the following is considered a satisfactory alternate testing method.

NOTE: (SUBMARINES ONLY) THE FOLLOWING EXEMPTIONS DO NOT APPLY TO SUBMARINE HULL AND BACKUP VALVES OR ASSOCIATED HULL INTEGRITY JOINTS OUTBOARD OF THE BACKUP VALVE.

(1) For lack of seat tightness testing, measure and document the following as applicable:

(a) A seat blue check for non-ball valves (100% contact required).

(b) For soft seated valves, such as Parker check valves, where a blue check is not practical, re-assemble the valve, perform the appropriate mechanical joint tightness test, and applicable portions of the Unrestricted Operation Maintenance Requirement Card (if applicable). A minor DFS is required to document the lack of seat tightness testing and the requirements to conduct inspections during a controlled dive to test depth to verify seat tightness.

(c) Dimensional verification/stack height for ball valves (satisfactory seat compression required).

(d) For welded or brazed in-line SUBSAFE valves (hull and backup valves are specifically excluded) and all non-nuclear, non-SUBSAFE valves repaired in place, no DFS is required.

(e) For bolted-in SUBSAFE valves repaired in place, initiate a major DFS to the Type Commander in accordance with Part I, Chapter 8 of this volume to document the lack of seat tightness test.

(2) For lack of mechanical joint tightness testing for valves in submarine sea connected systems, perform a controlled assembly of the valve(s) mechanical pressure boundary joints and initiate a minor DFS to document the lack of test. Clearance will require that the affected joints be visually inspected during the first controlled dive.

c. Welded joint options. Reference (c) contains options for testing welded joints.

NOTE: ELECTION TO INVOKE THE OPERATING PRESSURE TEST OPTION REQUIRES A CLEAR UNDERSTANDING OF THE SYSTEM OPERATING, TEST AND INSPECTION REQUIREMENTS OF REFERENCES (c), (d) AND APPLICABLE TEST METHODS. CONSIDERATION MUST BE GIVEN TO SAFETY, MAINTENANCE COST, TIME AND THE SPECIFIC SYSTEM UNDERGOING REPAIR. THE OPERATING PRESSURE TEST OPTION MUST BE PART OF THE PRE-PLANNED REPAIR PROCESS INCORPORATED INTO A CWP.

d. Nuclear interface systems. Nuclear interface systems should be tested in accordance with reference (a).

e. Brazed joints.

(1) A hydrostatic test is not required after brazed repairs or replacements if all of the following criteria are met:

(a) System is a reduced energy system. (Normal operating pressure 200 psig or less and normal operating temperature 200 degrees F or less). Joints are not in “lethal” system as defined in reference (n). Joints are not in sea water or sea connected systems or portions thereof, which are subject to submergence pressure below 200 feet or to sections of piping that pass through sea pressure rated bulkheads and which are rated for submergence pressures greater than 200 feet.

(b) All applicable NDT on brazed joints is performed.

(c) Visually inspect for leakage during the first system pressurization to normal operating pressure.

(2) When a brazed joint of a system and/or component cannot be strength tested due to configuration, the following is considered to be an acceptable alternative:

(a) Initiate a major DFS to document the lack of strength test.

(b) Visually inspect the joint for leakage during first system pressurization to nominal/system operating pressure and document on a QA form 17.

f. Mechanically attached fittings are not welded or brazed fittings. They must meet all QA requirements as specified in the applicable Uniform Industrial Process Instruction or Process Instruction for mechanically attached fitting installation per reference (c). Election of the operating pressure test option will not require a DFS if pre-planned into the repair process to ensure all original QA requirements and additional NDT required by reference (c) are performed.

g. (Submarines only) When post deep dive passive/pre-energize testing is required by system specific Technical Manuals or Maintenance Index Pages/Maintenance Requirement Cards, outboard electrical connections subject to full submergence sea pressure will be documented on a QA form 12 as a minor departure to accomplish post deep dive passive/pre-energize testing. The departure will also indicate if a controlled assembly was performed.

7.5 REACTOR PLANT AND NUCLEAR SUPPORT FACILITY TESTING.

7.5.1 Hydrostatic/Pneumatic Tests or Drop Tests. A QA form 26 and QA form 27, will be used to document the OQE that the hydrostatic/pneumatic or drop testing was completed satisfactorily.

a. When unable to accomplish the required test, a Liaison Action Request will be initiated in accordance with Part I, Chapter 8, of this volume.

b. When unable to satisfactorily test repaired valves due to out of specification seat leakage, Part I, Chapter 8, of this volume describes the procedure to defer work and close out the CWP.

c. Reference (a) contains the hydrostatic test requirements for reactor plant fluid systems and portions of systems. It contains requirements for test rigs, test gauges, and test precautions.

d. Some reactor plant fluid systems have specific system hydrostatic test instructions and special test requirements in the RPM. Others must have local procedures prepared based on the requirements of reference (a) and the RPM.

e. The Immediate Superior in Command will review Ship''s Force test procedures for FMA accomplished nuclear work and will resolve questions or problems with test requirements.

f. The System Test Check List in Volume IV, Chapter 9 of this manual will be used in preparation, conduct and recovery from test.

7.5.2 Mechanical Joint Fasteners.

a. When mechanical joint fasteners are removed and re-installed or replaced one at a time and torqued in accordance with an approved procedure, refer to reference (a) to determine the extent of test required.

b. Test requirements for mechanical fasteners within the reactor plant SUBSAFE boundary are contained in Appendix 8 of reference (h).

c. Replacement of fasteners shall be controlled by a CWP in accordance with Part I, Chapter 2, of this volume, for hydrostatic tests and tests above normal operating pressure when an external source is required.

7.5.3 Valve Seat Leak Tests. Valve seat leak tests shall be performed according to the cognizant RPM (Corrective Maintenance Instruction, the RPM Principles of Maintenance section, etc.) and the applicable technical manual. A Fleet Maintenance Support Branch Quality Engineering Division Note summarizes the requirements for troubleshooting and leak testing reactor plant valves.

7.6 SUPPLEMENTAL TEST CRITERIA (NON-NUCLEAR).

7.6.1 Purpose. This section is provided along with section 7.4 of this chapter to identify test requirements that may be used when more authoritative requirements are not available, or are incomplete. The performance of tests in accordance with these requirements will constitute satisfactory testing. A DFS will not be required unless specifically required as part of the alternative test. The applicable ship class source documents take precedence over Appendices A and B. Notes in the appendices also provide testing guidance that is to be applied even when the testing requirements are specified by TPD or other authoritative guidance. Appendix A applies to Surface ships systems and Appendix B applies to Submarines.

a. Appendices A and B are intended as a general guide for testing where specific guidance is not provided. All portions of a given system may not necessarily be tested to the pressure specified (e.g., the 30 psig portions of a submarine Fuel Oil Filling, Transfer, and Compensating Water System should not be tested to 150% of test depth pressure).

b. For component testing where a TRS/MS has been used for restoration or overhaul, TRS/MS testing requirements should be followed. TRS/MS requirements may differ from the test specifications on the drawing for the component. The drawing specifications are generally intended as manufacturing acceptance tests. Though no specific guide to precedence can be made, good engineering judgment and conservative approach to testing should prevail. If only part of a TRS/MS was used in component maintenance, the testing requirements in the TRS/MS may not apply. The use of submarine TRS/MS in the testing phase of maintenance has, in the past, required an inordinate amount of work during submarine upkeep and refit periods. Where only minor repairs (as defined in the glossary) are accomplished using a TRS/MS, only the applicable test requirements should be accomplished.

(This Page Intentionally Left Blank)

APPENDIX A

TESTING REQUIREMENTS FOR SURFACE SHIP SYSTEMS

System Note 1	Column 1 Strength and Porosity Test Pressure Notes 2, 3, and 4	Column 2 Mechanical Joint Tightness Test Pressure Notes 3, 4, and 5	Special Notes
Steam	135% system design pressure	100% nominal operating pressure	
Non-Nuclear structural tanks			
Feed and condensate	135% system design pressure	100% nominal operating pressure	
Fuel oil service	135% system design pressure	100% nominal operating pressure	
Lube oil fill, transfer, and service	135% system design pressure	100% nominal operating pressure	Note 3
Oxygen (except surface ship divers' life support systems)	135% system design pressure	100% nominal operating pressure	Notes 6, 7, and 8
Nitrogen	135% system design pressure	100% nominal operating pressure	Note 7
Fresh water cooling, chilled water, potable water	135% system design pressure	100% nominal operating pressure	
Fuel oil filling and transfer	135% system design pressure	100% nominal operating pressure	
Compressed air (except surface ship divers' life support systems, bleed air, and starting air)	135% system design pressure	100% nominal operating pressure	
Hydraulic (e.g., ship service, controllable pitch propeller, windlass)	135% system design pressure	100% nominal operating pressure	Notes 3 and 9
Boiler (within boundary valves)	See Note 10	See Note 10	
Fire main and flushing	135% system design pressure	100% nominal operating pressure	
Sea water cooling	135% system design pressure	100% nominal operating pressure	
Deck and plumbing drains, sound tubes open to the atmosphere	Not required	See Note 11	
Countermeasures washdown	50 psig	Operational test	
Divers' life support system (air, oxygen, helium)	135% system design pressure	100% nominal operating pressure	Notes 7, and 8

System Note 1	Column 1 Strength and Porosity Test Pressure Notes 2, 3, and 4	Column 2 Mechanical Joint Tightness Test Pressure Notes 3, 4, and 5	Special Notes
Sewage	135% system design pressure	100% nominal operating pressure	
Ballasting, sea water transfer	135% system design pressure	100% nominal operating pressure	
Primary and secondary drainage from pump	50 psig	Operational test	
Primary and secondary drainage from eductor	135% system design pressure	100% nominal operating pressure	
Bilge stripping system	50 psig	Operational test	
Main steam drain system	Relief valve setting	Operational test	
Feedwater drain collecting system	Fill with water and let stand		
Feedwater drain collecting tank and discharge from tank	135% system design pressure	Operational test	
Gage lines (all systems)	135% system design pressure for welded and brazed joints visual inspection for other joints	Operational Test	
Freon, Halon, hydrocarbons	135% system design pressure	See Note 12	
Valves	135% system design pressure		Note 13

NOTE 1: Testing requirements for surface ship piping and components not specified above will be 135% of system design pressure (150% of nominal operating pressure) where repairs meet the criteria of a major repair.

NOTE 2: Strength and porosity test - Where a major repair is accomplished on the pressure boundary of a piping system or component, that portion of the system or component will be hydrostatically tested as indicated in column 1. Strength and porosity test duration is 30 minutes unless otherwise specified on a component, system, or TPD. The strength and porosity test pressure is identified on a TPD as the "H" pressure.

a. Strength and porosity test pressure shall be not less than 50 psig.

b. New mechanical joints (as defined in the Glossary of Terms) are subjected to a strength and porosity test.

NOTE 3: Test fluids**.**

a. If the test fluid for a mechanical joint tightness test is not specified, either clean fresh water or system fluid shall be used. System fluid shall be used for hydraulic and lubricating oil systems. Compressed gasses may be used for mechanical joint tightness tests provided they can be used safely.

b. Observe safety precautions for air, industrial gases, and hydraulic systems found in NSTM, as well as notes below, if system fluid or gas is used.

NOTE 4: Exceptions/alternatives to hydrostatic test requirements are provided in Section 7.4 of this chapter.

NOTE 5: Mechanical joint tightness test duration is 30 minutes unless otherwise specified on a component, system, or TPD. The mechanical joint tightness test pressure is indicated on a TPD as the "J" pressure or nominal operating pressure if performing an operational pressure test. Zero visual external leakage is normally the tightness acceptance criterion.

a. Re-made mechanical joints (as defined in the glossary) are subjected to a mechanical joint tightness test.

b. The tightness test must be performed with the thermal insulation removed from mechanical joints to be examined.

NOTE 6: Where oxygen piping or system components are re-installed by mechanical joints, these portions of the system will be tested to 100% operating pressure using **nitrogen** in accordance with reference (o). System fluid (oxygen) may be used in **at-sea** situations when use of nitrogen is not practical. The test pressure will be held for a minimum of 15 minutes plus the time required to conduct inspection of joints under test.

NOTE 7: Refer to reference (o) for testing requirements and procedures for oxygen, nitrogen, and hydrogen systems.

NOTE 8: Before testing oxygen stop valves with Kerotest Co. cartridges in accordance with Kerotest Drawing 72594765, ensure the valve is assembled in accordance with Kerotest Instruction K-673 and that the union is torqued to 160 - 170 ft.-lbs. This is necessary to ensure the cartridge is not damaged.

CAUTION: CARE MUST BE EXERCISED WHEN HYDRAULIC OIL IS USED AS A TEST LIQUID TO PREVENT SPRAY OR LEAKAGE FROM BECOMING A FIRE OR CONTAMINATION HAZARD.

NOTE 9: Where shop pre-tested hydraulic system components or hydraulic system piping are reinstalled by mechanical joints, those portions will be tested to column 2 requirements using hydraulic oil as the test fluid.

NOTE 10: All testing within the boundary valves of boilers shall be accomplished in accordance with reference (g).

NOTE 11: System must be open to the atmosphere. Fill system with water and allow to stand for a minimum of 30 minutes. Examine disturbed joints for leakage; none is allowed.

NOTE 12: Refer to system, equipment, or component technical manual. Final test involves performance of pressure drop tests over various time periods. See also reference (o).

NOTE 13: Cycle valve during hydrostatic testing as required by NSTM.

(This Page Intentionally Left Blank)

APPENDIX B

TESTING REQUIREMENTS FOR SUBMARINE SYSTEMS

System Note 1	Column 1 Strength and Porosity Test Pressure Notes 2, 3, and 4	Column 2 Mechanical Joint Tightness Test Pressure Notes 3, 4, and 5	Special Notes
Steam	135% system design pressure	100% nominal operating pressure	
Non-Nuclear structural tanks			Notes 13 and 18
Feed and condensate	135% system design pressure	100% nominal operating pressure	
Fuel oil service	135% system design pressure	100% nominal operating pressure	
Lube oil fill, transfer, and service	135% system design pressure	100% nominal operating pressure	Note 3
Oxygen (except surface ship divers' life support systems)	135% system design pressure	100% nominal operating pressure	Notes 10, 11, and 12
Nitrogen	135% system design pressure	100% nominal operating pressure	Note 11
Fresh water cooling, chilled water, potable water	135% system design pressure	100% nominal operating pressure	
Fuel oil filling and transfer	135% system design pressure (135% test depth pressure for those portions of submarine systems exposed to submergence pressure)	100% nominal operating pressure (100% test depth pressure for those portions of submarine systems exposed to submergence pressure)	
Compressed air including EMBT blow (except surface ship divers' life support systems, bleed air, and starting air)	135% system design pressure	100% nominal operating pressure. For submarines, this is up to the pressure hull cutout valve if the airline penetrates the pressure hull	Notes 6, 8 and 24
Hydraulic (e.g., ship service, steering and diving, windlass, flood control)	135% system design pressure	100% nominal operating pressure	Notes 3, 23 and 24
Hull glands, cables, shafts, masts			Notes 13, 25, 26 and 29
Escape trunks, hatches (including missile tube muzzle hatches on SSBN/SSGN Class Submarines), watertight bulkhead doors, Sonar Spheres			Notes 14, 21, 27, 28, 29 and 32
Periscopes			Note 16

System Note 1	Column 1 Strength and Porosity Test Pressure Notes 2, 3, and 4	Column 2 Mechanical Joint Tightness Test Pressure Notes 3, 4, and 5	Special Notes
Antennas		In accordance with NAVSEA 0900-LP-016-7007 and SS-404-1971420	Note 31
Diesel Sea Water (DSW)			Notes 6 and 9
Hydrogen	135% design pressure	100% nominal operating pressure	Note 11
Hovering/depth control, sea water circulating (e.g., ASW, MSW, Air Conditioning Seawater)	150% test depth plus pump shutoff pressure	100% test depth pressure	Notes 6, 7, 24, and 30
Plumbing system subjected to submergence pressure	150% test depth	100% test depth pressure	Note 6
Trim and drain systems subjected to submergence pressure	150% test depth pressure	100% test depth pressure	Notes 6, 7 and 24
Torpedo tube system, including the entire SUBSAFE portion of the system	100% test depth pressure plus 90 psig	100% test depth pressure plus 90 psig	Notes 17 and 24
Signal ejectors			Notes 20, 24 and 32
SSBN/SSGN bulkhead penetrator holes/covers			Note 22
Snorkel induction and exhaust lines			Notes 15 and 32
Cable plugs to EHFs, EHPs, antennas, masts, radars and other component connection/joint exposed to submergence sea pressure (excluding shore power connectors and pressure proof caps used on EHFs and EHPs)			Note 31

NOTE 1: Testing requirements for submarine ship piping and for submarine pressure hull envelope systems and components not specified above will be 135% of system design pressure (150% of nominal operating pressure) where repairs meet the criteria of a major repair.

NOTE 2: Strength and porosity test - Where a major repair is accomplished on the pressure boundary of a piping system or component, that portion of the system or component will be pressure tested as indicated in the applicable TPD. The strength and porosity test pressure is identified on a TPD as the "H" pressure. In the absence of specific test pressure direction on a TPD, test pressure shall be per Note 1. Strength and porosity test duration is 30 minutes unless otherwise specified in a technical reference.

a. Strength and porosity test pressure shall be not less than 50 psig unless otherwise specified in the TPD.

b. New mechanical joints (as defined in the Glossary of Terms) are subjected to a strength and porosity test.

NOTE 3: Test fluid.

a. If the test fluid for a mechanical joint tightness test is not specified, either clean fresh water or system fluid shall be used. System fluid shall be used for hydraulic and lubricating oil systems. Compressed gases may be used for mechanical joint tightness tests provided they can be used safely.

b. Observe safety precautions for air, industrial gases, and hydraulic systems found in NSTM, as well as notes below, if system fluid or gas is used.

NOTE 4: Exceptions/alternatives to hydrostatic test requirements are provided in Section 7.4 of this chapter.

NOTE 5: Mechanical joint tightness test duration is 30 minutes unless otherwise specified on a component, system, or TPD. The mechanical joint tightness test pressure is indicated on a TPD as the "J" pressure or nominal operating pressure if performing an operational pressure test. Zero visual external leakage is normally the tightness acceptance criterion.

a. Re-made mechanical joints (as defined in the glossary) are subjected to a mechanical joint tightness test.

b. The tightness test must be performed with the thermal insulation removed from mechanical joints to be examined.

c. This note does not apply to submarine hull and backup valves. (See NOTE 6 of this appendix)

NOTE 6: Where hull valves and backup valves are repaired or replaced, they will be tested as follows:

a. Valves removed for repair. Hull valve and/or backup valves that are removed completely from the system for repair and/or maintenance will be tested as follows:

(1) Prior to installing in the system:

(a) Conduct a strength and porosity test to column 1 requirements with the valve ball/disc positioned such that the unproven pressure boundary parts and disturbed joints are exposed to test pressure.

(b) With the valve shut, test from seaside to column 1 requirements to test for seat leakage.

(c) If a mechanical joint leaks at column 1 pressure, decrease to column 2 pressure and verify no leakage.

(d) For minor repairs, test as in steps a.(1) (a) through a.(1) (c) of this Note, but to column 2 requirements.

(e) Where valve internals can be visually inspected for leakage, seat tightness test pressure need only be maintained for three minutes unless specified otherwise in the applicable maintenance document.

(2) After re-installation in system, test disturbed mechanical joints as follows:

(a) Apply test pressure of column 1 requirements to all mechanical joints to which major repairs were conducted and not strength tested prior to valve installation.

(b) Apply external (seaside) test to column 1 requirements of all mechanical joints between hull valve and hull. For other disturbed mechanical joints, test to column 2 requirements.

(c) For hull joints where testing is not feasible, controlled assembly followed by a controlled dive in accordance with paragraph 7.4.2 a of this chapter is a satisfactory alternative to the test.

b. Valves repaired in place.

(1) If major repairs have been accomplished:

(a) Conduct a strength test to column 1 requirements with the valve ball/disc positioned such that the unproven pressure boundary parts and disturbed joints are exposed to test pressure.

(b) With the valve shut, test from seaside to column 1 requirements to test for seat leakage.

(c) If a mechanical joint leaks at column 1 pressure, decrease to column 2 pressure and verify no leakage.

(2) If minor repairs have been accomplished, test as in step b.(1) of this Note, but to column 2 requirements. If test to column 2 requirements is not possible, controlled assembly followed by a controlled dive in accordance with paragraph 7.4.2 of this chapter, is a satisfactory alternative to the test.

(3) For those mechanical joints in sea connected systems where testing is not feasible, controlled assembly followed by a controlled dive in accordance with paragraph 7.4.2 a. of this chapter, is a satisfactory alternative to the test.

c. Operational test. In addition to the hydrostatic testing required by steps a. or b. of this Note, after repairs have been completed on the valve and/or hydraulic actuator, in-place operational testing of Emergency Flood Control hydraulic components or Emergency Main Ballast Tank Blow valves will be conducted by performing applicable portions of the operational Unrestricted Operation.

d. Trash Disposal Units (TDU). The TDU is a special purpose device which requires tests beyond those normally required of hull and/or backup valves. The specific testing required for the re-certification of the TDU after maintenance must be determined from MSs or other reference documentation. A good reference to ensure adequate testing is the Index of Submarine Maintenance Engineering, Planning and Procurement (SUBMEPP) Standardized Test Procedures SSN/SSBN/SSGN Submarines.

NOTE 7: For testing work performed on portions of the sea connected systems including the joint between the hull and hull valve, tests shall be conducted for strength and porosity and mechanical joint tightness to the pressures specified on the applicable ship/class drawing. In some instances the pressures specified will not reflect those on the individual TPDs provided to the ship. For SSN 688 and SSBN/SSGN 726 Class ships, the applicable TPDs shall be used. The applicable ship/class drawings listed below should be used if TPDs are not available.

Ship/Class	Drawing	Strength	Tightness
SSN 21	830-6404016	#Item 18 plus 50 psi	Item 1
SSN 688	845-4456141	Item 3	Item 6
SSBN/SSGN 726	845-4640418	*Item 11	Item 1
SSN774	801-6984058	**Item 12	Item 18

Except for SSN23 LDT hull insert for TD-704 and 705 valve assembly which is tested to Item 1 of NAVSEA Dwg 830-6404016.

* Except valves TD-2021 and TD-2022 and associated piping which are tested to Item 2 of NAVSEA Dwg 845-4640418.

** Except valves TD-116, TD-138 and TD-554 and associated piping which are tested to Item 2 of NAVSEA Dwg 801-6984058.

Errors in any TPD should be reported to SUBMEPP via SUBMEPP Feedback Form provided as Appendix C of this chapter.

CAUTION: CRYSTALLIZATION/MELTING OF MAIN BALLAST TANK HULL STOP VALVE SEATS AND DOWNSTREAM EMERGENCY MAIN BALLAST TANK BLOW VALVE SEATS MAY RESULT FROM RAPID PRESSURIZATION OF THE EMERGENCY MAIN BALLAST TANK BLOW PIPING AGAINST SHUT MAIN BALLAST TANK HULL STOP VALVES.

NOTE 8: 4500 psig air system hull stop and bank stop valves will not be used as a boundary for hydrostatic test pressures greater than 4500 psig unless valve seats and software are replaced after the test and a mechanical joint tightness is performed.

NOTE 9: For repairs to the DSW system, inboard of the hull and backup valve, the column 1 test pressure is 122 psig and the column 2 test pressure is 88 psig. This is to prevent damaging the attached DSW pump.

NOTE 10: Where oxygen piping or system components are re-installed by mechanical joints, these portions of the system will be tested to 100% operating pressure using nitrogen in accordance with reference (o). System fluid (oxygen) may be used in at-sea situations when use of nitrogen is not practical. The test pressure will be held for a minimum of 15 minutes plus the time required to conduct inspection of joints under test.

NOTE 11: Refer to reference (o) for testing requirements and procedures for oxygen, nitrogen, and hydrogen systems.

NOTE 12: Before testing oxygen stop valves with Kerotest Co. cartridges in accordance with Kerotest Drawing 72594765, ensure the valve is assembled in accordance with Kerotest Instruction K-673 and that the union is torqued to 160 - 170 ft.-lbs. This is necessary to ensure the cartridge is not damaged.

CAUTION: WHEN TESTS INVOLVE NUCLEAR BOUNDARIES, REFER TO REFERENCE (h), REFERENCE (p), AND THE APPLICABLE RPM BEFORE TESTING.

NOTE 13: When packing glands, stuffing tubes, manhole covers, etc., in hull envelope boundary tanks are entered and remade, the assembled unit will be tested by conducting a 12 psig air tightness test. With 12 psig air within the tank, apply soap solution to the work area and inspect for leakage. No leakage is allowed.

NOTE 14: Escape trunk penetrations not exposed to sea pressure during normal ship operation, escape and access lower hatches, and watertight bulkhead doors require only a completion test. The completion test is a 12 psig air test with no pressure drop allowed in 10 minutes. If unable to accomplish the completion test, perform an alternate test per note 25 of this Appendix. No inspection following the controlled dive is required.

NOTE 15: Where repairs are performed on the snorkel induction or exhaust piping or valves, refer to reference (q) for test requirements.

NOTE 16: Periscope Types 2, 8, 15 and 22, after re-assembly, will be verified by gas testing to 50 psig internal pressure for 30 minutes with soap bubble test of work areas affecting periscope tightness. Periscope Types 2, 8, 15 and 22, as an alternative, may be tested using the Nitrogen/Halogen leak check method for internal low pressure testing as detailed in NAVSEA S9425-AW-PRO-010 Change A, Submarine Periscope Pressure Test, Evacuation/Charging and Dewpoint Test Procedures. Nitrogen/Halogen leak check, as detailed in NAVSEA S9425-AW-PRO-010 Change A, is the only method for internal low pressure testing of Type 18 periscope assemblies.

NOTE 17: Where minor repairs have been accomplished on torpedo tubes (including attached piping) and/or impulse tanks, the applicable portion of the system will be tested by performing sub-paragraph a., b. or c. below.

NOTE: WHEN REMOVAL OF THE TORPEDO TUBE SIGHT GLASS (SSN688/SSB(G)N726 CLASS) OR LIGHT PIPE (SSN21 AND 774 CLASSES) ASSEMBLIES IS REQUIRED TO INSTALL TEST INSTRUMENTATION, REINSTALLATION OF THE SIGHT GLASS SHALL INCLUDE A VISUAL INSPECTION OF THE GLASS (CHECK FOR CHIPPING, CRACKS, ETC.) AND/OR IF THE SIGHT GLASS HAS BEEN REMOVED FOR REPAIRS (LEAKS, BROKEN GLASS, STRIPPED THREADS, ETC.), TESTING SHALL BE ACCOMPLISHED PER SUB-PARAGRAPH b. BELOW.

a. "J" pressure hydrostatic test pierside.

b. Controlled assembly of components exposed to sea pressure, completion test and a water tight integrity test.

(1) For Torpedo Tubes and piping: The affected joints shall be assembled as a controlled assembly and subjected to a 12 psig air tightness test for 10 minutes. Accomplish a soap bubble test of the affected joints. In addition, a minor DFS will be used to document requirement for inspections during a controlled dive in order to verify re-establishment of the watertight integrity for those repaired joints.

(2) If air soap test is impractical, or if the affected joint is inaccessible, a drop test may be conducted by pressurizing to 12 psig air, allowing time for pressure/temperature to stabilize. Hold for 30 minutes, pressure drop shall not exceed 10 oz. A minor DFS and inspection during controlled dive is required.

c. For Impulse Tank: The affected joints shall be assembled as a controlled assembly and subjected to a drop test by pressurizing to 12 psig air. Allow time for pressure/temperature to stabilize, hold for 10 minutes. No drop allowed. In addition, a minor DFS will be used to document requirement for inspections during a controlled dive in order to verify re-establishment of the watertight integrity for those repaired joints.

(1) When drop test is conducted in drydock, record the highest pressure held. Minimum pressure shall be 5 psig. No drop allowed. Repeat at 12 psig when waterborne.

(2) In lieu of drop test, the affected joints shall be assembled as a controlled assembly and the tank subjected to a 12 psig air tightness test for 10 minutes. Accomplish a soap bubble test of the affected joints. A minor DFS and inspection during controlled dive is required.

CAUTION: WHEN PERFORMING TESTING OF TANKS, COMPLY WITH REFERENCE (p), SECTIONS 50 THROUGH 54.

NOTE 18: NAVSEA drawing 126-5792666 provides the detailed requirements and guidance for tank testing.

NOTE 19: DELETED

NOTE 20: Signal ejectors/launchers are special purpose devices, which require tests beyond those normally required of hull and/or backup valves. The specific testing required for the re-certification of signal ejector or launcher after maintenance must be determined from ship's plans and/or other reference documentation. A good reference to ensure adequate testing is the Index of SUBMEPP Standardized Test Procedures SSN/SSBN/SSGN Submarines.

NOTE 21: Upper escape and access hatches (including missile tube muzzle hatches on SSBN/SSGN Class Submarines) and escape trunk penetrations exposed to sea pressure during normal ship operation require a completion test and a controlled dive to test depth. The completion test is a 12 psig air test conducted per Note 25 of

this Appendix for 10 minutes. In addition, a minor DFS will be used to document the requirement to inspect for leakage by opening the escape trunk drain at depths for hull valve cycling in accordance with NAVSEA Instruction C9094.2B to verify re-establishment of the watertight integrity for the repaired items.

NOTE 22: Bulkhead penetration hole covers will be tested using the air hose test alternative of Note 25, step c. of this appendix. Upon successful completion of the air hose test, document test on a QA Form 17 and submit to the ship's Quality Assurance Officer. A DFS is not required.

CAUTION: CARE MUST BE EXERCISED WHEN HYDRAULIC OIL IS USED AS A TEST LIQUID TO PREVENT SPRAY OR LEAKAGE FROM BECOMING A FIRE OR CONTAMINATION HAZARD.

NOTE 23: Where shop pre-tested hydraulic system components or hydraulic system piping are reinstalled by mechanical joints, those portions will be tested to column 2 requirements using hydraulic oil as the test fluid.

NOTE 24: For maintenance involving a system or component monitored under the Unrestricted Operation Maintenance Requirement Card program, partial or full performance of in-periodicity operational Unrestricted Operation Maintenance Requirement Cards may be required as a retest. Consult NAVSEA 0924-062-0010, Submarine Safety Requirements Manual, Section 6.4.5 for additional information. Perform applicable portions of Unrestricted Operation-Maintenance Requirement Card 025. For "O" and "I" level activities, when a component in the Emergency Flood Control System is disturbed, the retest shall consist of testing the entire Emergency Flood Control System, e.g., if a component in the Engine Room was disturbed, a retest of the entire Engine Room is required. If a component in the Forward Emergency Control System is disturbed, a retest of the entire Emergency Flood Control System in the Forward compartment is required.

NOTE: NAVSEA DRAWING 126-5792666 ALSO CONTAINS INFORMATON REGARDING TESTING OF SUBMARINE TANKS AND COMPARTMENTS.

NOTE 25: Hull Glands (e.g., cable stuffing tubes, shaft/mast packing glands, electrical/electronic hull fittings excluding the inboard packing assembly and pressure proof caps screwed onto EHF cable connection). Hull glands require a completion test (12 psig compartment test) and an acceptance/structural watertight integrity test (where the joint is exposed to full submergence depth pressure). If the structural watertight integrity test will be accomplished by performing a controlled dive to test depth, the work is required to be accomplished using a controlled assembly, and a minor DFS for the controlled deep dive is required. The affected joints will be inspected during the first controlled dive. Performance of alternate completion tests are acceptable in lieu of a 12 psi compartment test and do not require a DFS. In the event that a 12 psig compartment test or an alternate completion test cannot be accomplished and the structural watertight integrity test will be accomplished by performing a controlled dive to test depth, the work is required to be accomplished using a controlled assembly and a major DFS for the controlled deep dive is required. The affected joints will be inspected during the first controlled dive. If required, perform one of the following alternate completion test methods when a 12 psi compartment test is not scheduled or practical.

a. Cofferdam Test Method.

(1) A pressure cofferdam can be used to verify the tightness of hull or bulkhead patches or components after re-installation where it is physically possible to cover the item. A simple cofferdam can be constructed from six inch diameter or larger pipe with length determined by item to be tested. One end of the pipe is capped and the other fitted with a suitable gasket to provide a seal. Sufficient pipe threaded penetrations should be provided for air supply, gauge, and relief valve fittings.

(2) Cofferdam tests, used in lieu of 12 psig compartment air tests, will be performed as follows:

(a) Install the cofferdam over joint/fittings to be tested so that the pressure differential will be in the same direction as a full compartment or tank test. Secure the cofferdam by use of shores and wedges or hydraulic jacks braced against sound structure. Attach air supply and non-isolable gauge and relief valves.

(b) Pressurize the air space inside the cofferdam to the test pressure specified for the test of the applicable tank or compartment, as shown in the ship's test drawing.

(c) Apply a soapy solution to the opposite side of the structure and inspect for leakage.

(d) Acceptance criteria for cofferdam tests will be no evidence of leakage.

(e) Where the opposite side of the structure is inaccessible, an alternate method of providing tightness is to measure the drop in pressure within the cofferdam over a ten minute period. The gasket and fittings in the cofferdam should be checked for leakage using a soapy solution.

(f) Acceptance criteria for this alternate cofferdam test will be no drop in pressure.

b. Vacuum Box Test Method.

(1) A vacuum box can be used to test the same items tested by the cofferdam method. However, since the pressure differential is now in the opposition direction, it may be used in many locations where a cofferdam is not suitable. Several portable vacuum pumps capable of pulling a vacuum in a small displacement test vessel are commercially available. An air eductor can be used to pull a vacuum for testing penetrations through the deck over a submarine battery space.

(2) Vacuum box tests used in lieu of 12 psig compartment air tests, will be performed as follows:

(a) Apply a soapy solution to the joint to be tested.

(b) Install the vacuum box over the joint or fitting to be tested so that the pressure differential will be in the same direction as a full compartment or tank test.

CAUTION: PROVIDE SUPPORT FOR THE VACUUM BOX WHERE A CHANGE IN THE INTERNAL PRESSURE COULD CAUSE THE BOX TO FALL.

(c) Draw a vacuum to obtain a pressure differential comparable to the test pressure specified in the ship's test drawings.

(d) Inspect the joint or fitting for leakage by observing through the Plexiglas cover of the vacuum box for the formation of bubbles which would indicate leakage.

(e) Acceptance criteria for vacuum box tests will be no evidence of leakage.

(f) An alternate test method of proving tightness with the vacuum box is to measure the rise in pressure within the vacuum box over a ten minute period.

NOTE: A SOAPY SOLUTION SHOULD BE APPLIED TO THE GASKET, COVER, AND FITTINGS INSIDE THE VACUUM BOX. FORMATION OF BUBBLES ON THE INTERIOR OF THE VACUUM BOX INDICATES A LEAK IN THE BOX.

(g) Acceptance criteria for this alternate vacuum box test will be no rise in pressure.

c. Air Hose Test Method.

(1) An air hose test may be used to verify the tightness of piping or electrical penetrations directly accessible on both sides of the bulkhead or pressure hull for observation. Extreme caution will be used when this method is used to test periscopes, hydraulic control rods or other movable cylinders that penetrate bulkheads or the pressure hull due to the possibility of blowing abrasive material into the seals. Also, ensure that openings exist to prevent ambient pressure buildup.

(2) Air hose tests will be performed as follows:

(a) The air hose nozzle shall be about 3/8 inch in diameter and the pressure at the nozzle shall be about 90 psig.

(b) Apply a soapy solution to the structure on the side opposite from the side the stream of air is to be applied.

WARNING: HIGH VELOCITY AIR IS A PERSONNEL HAZARD. ALL NON-ESSENTIAL PERSONNEL WILL BE CLEARED FROM THE AREA BEING TESTED. SAFETY GLASSES WILL BE WORN AT ALL TIMES. CARE MUST BE TAKEN SO THAT THE AIR STREAM IS NOT DIRECTED TOWARD ANY PERSONNEL.

(c) The air hose shall be located so as to produce a pressure differential in the same direction as would occur if a full compartment or tank test were performed. Hold the nozzle as close as possible to the joint/fitting under test and direct the air stream in the manner most likely to reveal leakage.

(d) Inspect the soapy solution for the formation of bubbles during the test, which would indicate leakage.

(e) Acceptance criteria for air hose tests will be no evidence of leakage.

d. Pressurized Water Testing Method for Submarine Main Propulsion Shaft Primary Seals (Shaft Seal Cavity Testing in advance of Controlled Deep Dive).

(1) Conduct pressurized water testing of the shaft seal cavity following assembly of any seal repaired in accordance with applicable tech manual or maintenance standard.

(2) If no pressurized water test procedure is available,

(a) Pressurize the repaired shaft seal cavity with fresh water to 100 (95 to 105) psig.

(b) Measure leakage rate past the affected seal into the ship. Allowable leakage is 16 oz/minute maximum. Test pressure must be held for 30 minutes minimum.

NOTE 26: For steering and diving penetrations (and other hull V-Ring packing installations including associated o-rings), perform a controlled assembly and initiate a minor DFS to document the requirement for inspections during a controlled dive to test depth in order to verify re-establishment of the watertight integrity for those joints.

NOTE 27: Removable Logistics Escape Trunks and Logistics Plug Trunks require an inter seal tightness test and a controlled dive to test depth. The inter seal tightness test will be accomplished using air or nitrogen to 100% test depth pressure with no pressure drop allowed in 10 minutes. In addition, immediately following the first controlled dive to test depth, enter the trunk and remove the cleanliness cap from the

drain/test connection and verify no leakage has occurred. A minor DFS will be used to document the requirement to inspect for leakage immediately following the dive to verify re-establishment of the watertight integrity for the reinstalled trunk.

NOTE 28: The Sonar Sphere requires a completion test and a controlled dive to test depth. The completion test is a 12 psig air test with no pressure drop allowed in 10 minutes. If unable to accomplish the completion test, perform an alternate test per note 25 of this Appendix. In addition, immediately following the first controlled dive to test depth, enter the sonar sphere and inspect for evidence of leakage. A minor DFS will be used to document the requirement to inspect for leakage immediately following the dive to verify re-establishment of the watertight integrity.

NOTE 29: Electrical/electronic hull fitting pressure proof caps manufactured in accordance with MIL-C-24231/12, 13 or 14 are not Level I or boundaries within the Subsafe Systems and do not require REC or testing when installed or operated.

NOTE 30: For preventative maintenance to inspect and replace seawater heat exchanger pencil and disc type zinc anodes closed with an o-ring threaded plug with a nominal diameter of 1-5/8" or less (outside of a major availability) accomplished without additional testing, the following conditions must be met:

a. Work will be performed using a CWP.

b. The joint will be assembled as a controlled assembly and documented on QA form 34.

c. Complete a surfaced condition maximum operating pressure test with zero leakage for 5 minutes. Operate seawater pumps at maximum speed without causing cavitations or violating operating procedure restrictions.

d. List "SURFACED" as the actual pressure on QA forms.

CAUTION: APPLYING POWER TO ANTENNA CONTROL CABLES OR TRANSMITTING ON RADIO FREQUENCY CABLES THAT HAVE NOT HAD THE ELECTRICAL CHECKS COMPLETED CAN SIGNIFICANTLY DAMAGE EQUIPMENT/COMPONENTS. IF THE APPROPRIATE ELECTRICAL CHECKS CANNOT BE COMPLETED, CONSIDERATION OF AN EQUIPMENT TAG-OUT MAY BE APPROPRIATE.

NOTE 31: Submarine outboard cable removal and replacement.

a. Insert plugs with new O-ring each time the cable is unplugged from the EHP or EHF and assemble using a controlled assembly. The QA form 34 is required to be retained until the availability is complete or if accomplished outside of an availability, the QA form 34 will be retained until the package is closed and reviewed by the Quality Assurance Officer.

b. After performing the deep dive, passive/pre-energize testing shall be performed in accordance with the system specific Technical Manuals or Maintenance Index Pages/Maintenance Requirement Cards to ensure the system is not grounded when required.

c. Controlled Assembly Process used for Re-Entry Control (REC) Exceptions or Exceptions to Retest Requirements for Mechanical Joints and consists of:

(1) Verification that surface finishes of gasket/O-ring sealing surfaces are in accordance with applicable specifications.

(2) Verification that fastener material and installation is in accordance with applicable specifications.

(3) Verification that gaskets/O-rings are properly installed and in accordance with applicable specifications.

(4) Assembly is documented on a Quality Assurance (QA) form 34.

(5) Inspected by a Quality Assurance Inspector (QAI) or Quality Assurance Supervisor (QAS).

NOTE 32: A partial salvage inspection shall be accomplished in accordance with Volume IV, Chapter 18 of this manual for any item worked during an availability (i.e., hatches, salvage air valves, etc.).

This Page Intentionally Left Blank

APPENDIX C

SUBMEPP PRODUCT FEEDBACK

FROM: SUBMEPP ACTIVITY
PO BOX 2500
PORTSMOUTH NAVAL SHIPYARD
PORTSMOUTH NH 03804-2500

DATE:

TO:

AUTHORIZED ACTION:
- ☐ FINAL RESOLUTION
- ☐ REFERRAL
- ☐ INTERIM SOLUTION

PRODUCT: ☐ TPD

TITLE OR SYSTEM: _____ NO: _____ REV/ CHG: _____

ORIGINATOR INFORMATION:

NAME: _____ CODE/SHOP: _____ PHONE: _____

EMAIL: _____ CLASS/HULL: _____ FAX: _____

ACTIVITY: _____ ORIGINATOR TRACKING NO: _____

SUBMEPP P.O.C. _____ SUBMITTAL DATE: _____

☐ ACTUAL NEED DATE:

Impact to activity if date not met

PROBLEM/RECOMMENDED SOLUTION:

SUBMEPP FINAL SOLUTION:

REMARKS:

APPENDIX C (Cont'd)

SUBMEPP TECH P. O. C.:	CODE: 18	PHONE: (207) 438-
PROGRAM MANAGER:	CODE: 1833	PHONE: (207) 438-

COPY TO:

CLOSEOUT:
☐ RESOLUTION NOT ACCEPTABLE - RETURN TO SUBMEPP FOR FURTHER ACTION
☐ REFERRAL APPROVED ☐ REFERRAL ANSWERED - RETURN TO SUBMEPP FOR FURTHER ACTION

ACTIVITY: SIGNATURE: DATE: PHONE:

Originator, please complete all highlighted sections between the "PRODUCT" and the "PROBLEM/RECOMMENDED SOLUTION"
Provide recommended solution whenever possible and contact SUBMEPP engineer prior to submittal if other than "Routine"
Email FOR OFFICIAL USE ONLY to SUBMEPP.MIDS@navy.mil via NMCI account
or to MIDS.SUBMEPP.nnpi@navy.mil via NNPI account; or FAX to (207) 438-6220.
(For questions contact Cynthia Waters at (207) 438-6239 or Bob Dearborn at (207) 438-6087)

PROBLEM/RECOMMENDED SOLUTION: (Cont'd)

SUBMEPP FINAL SOLUTION: (Cont'd)

REMARKS: (Cont'd)

COPY TO: (Cont'd)

VOLUME V

PART I

CHAPTER 8

DEPARTURE FROM SPECIFICATION (DFS/WAIVERS/NUCLEAR LIAISON ACTION REQUEST/STEAM PLANT ACTION REQUESTS)

REFERENCES.

(a) NAVSEAINST 5400.95 - Waterfront Engineering and Technical Authority Policy
(b) NAVSEA 0989-LP-037-2000 - Commissioned Submarine General Reactor Plant Overhaul and Repair Specification
(c) NAVSEA 0989-LP-043-0000 - Commissioned Surface Ship General Reactor Plant Overhaul and Repair Specification
(d) NAVSEA 0989-LP-058-1000 - Destroyer Tender and Submarine Tender Nuclear Support Facilities Overhaul and Repair Specification
(e) NAVSEA S9086-T4-STM-010 - NSTM Chapter 589 (Cranes)
(f) NAVSEA T9044-AD-MAN-010 - Requirements Manual for Submarine Fly-By-Wire Ship Control Systems
(g) NAVSEA S9086-CH-STM-020/CH-074 V2 (NSTM, Chapter 074, Vol 2) - Nondestructive Testing of Metals, Qualification and Certification Requirements for Naval Personnel (Non-Nuclear)
(h) NAVSEA T9074-AS-GIB-010/271 - Requirements for Nondestructive Testing Methods
(i) NAVSEAINST C9210.4 - Changes, Repairs and Maintenance to Nuclear Powered Ships
(j) NAVSEA SL720-AA-MAN-010 - Fleet Modernization Program (FMP) Management and Operations Manual

LISTING OF APPENDICES.

A Departure From Specification Request Message Format
B Departure From Specification Clearance/Cancellation Report Message Format

8.1 PURPOSE. To establish standard procedures to be used by the Fleet and all maintenance activities for reporting, requesting approval and clearance, at the earliest opportunity, of all non-conforming/departable conditions, Departures from Specification (DFS).

8.1.1 Background. Specifications are engineered requirements such as type of materials, dimensional clearances, vibration levels, flow rates, and physical arrangement to which ship components are purchased, installed, tested, and maintained. All ships are designed and constructed to specific technical and physical requirements. It is imperative that every effort be made to maintain all ship systems and components to their designed specifications. There are occasions when the applicable specifications cannot be met. In these cases, the non-conformance to specifications is controlled with a DFS.

8.1.2 Terminology.

a. A DFS is the mechanism used to document and resolve a lack of compliance with any authoritative document, plan, procedure, instruction, etc.

b. Authorized Technical Authority. An Authorized Technical Authority is a representative designated by reference (a) to act for Naval Sea Systems Command (NAVSEA) in dispositioning non-conformance issues. They are also charged with providing technically sound maintenance alternatives to the Fleet upon which maintenance and operational decisions can be made.

c. The terms deviation and waiver are often used synonymously. The principle difference being that deviations are requested prior to conducting work that will result in a non-conformance and waivers are requested after a non-conformance has been discovered.

8.1.3 Specification. Technical specifications originate from a variety of sources. When a conflict exists between specifications the governing requirement has to be determined on a case by case basis. The following listing is provided to assist in determining the governing specification. This listing may not be exact for a particular case and all pertinent technical documents will require review:

a. Non-Nuclear listing of specifications which may be consulted when determining the governing specification:

(1) Volume V (Quality Maintenance) of the Joint Fleet Maintenance Manual.

(2) Fleet/Type Commander (TYCOM) Technical Notes.

(3) Ship's plans/drawings, NAVSEA Standard and Type drawings, and approved Technical Repair Standard or Maintenance Requirement Procedure, or Maintenance Standard.

(4) NAVSEA letters and Liaison Action Requests (LAR).

(5) The Military Standard (MIL-STD) and Military Specification (MIL-SPEC) series. MIL-SPEC for specific components being procured or manufactured, MIL-STD for specific processes being performed.

(6) NAVSEA approved component technical manuals.

(7) NAVSEA 0902-018-2010; General Overhaul Specifications for Deep Diving SSBN/SSN Submarines.

(8) TYCOM Instructions.

(9) Naval Ships' Technical Manuals and Technical Specifications.

(10) NAVSEA Instructions.

(11) NAVSEA S9AA0-AB-GOS-010; General Specifications for Overhaul of Surface Ships.

NOTE: WHERE THIS MANUAL IS MORE RESTRICTIVE THAN OTHERS, THIS MANUAL WILL TAKE PRECEDENCE UNLESS SPECIFICALLY STATED THAT IT PROVIDES GUIDANCE ONLY. UNRESOLVED QUESTIONS ON PRECEDENCE SHOULD BE REFERRED TO THE TYCOM FOR RESOLUTION. IN SOME INSTANCES A SPECIFICATION OF LESSER PRECEDENCE MAY MODIFY OR SUPERSEDE A MORE SENIOR SPECIFICATION, I.E., A NAVSEA LETTER OR LAR RESPONSE COULD SPECIFICALLY MODIFY A TECHNICAL STANDARD PENDING REVISION.

b. Nuclear listing of specifications which may be consulted when determining the governing document:

(1) Reactor Plant Manual.

(2) Reactor plant component technical manuals.

(3) NAVSEA technical manuals (e.g., NAVSEA 250-1500-1 Welding Standard).

(4) Reference (b).

(5) Reactor Plant Drawings.

(6) NAVSEA instructions.

(7) TYCOM instructions.

(8) Reference (c).

(9) Reference (d).

8.2 DEPARTURE FROM SPECIFICATION. A DFS (non-nuclear only) is a lack of compliance with any authoritative document, plan, procedure, instruction, etc. General guidance regarding DFS is as follows:

NOTE: FOR SURFACE SHIPS AND AIRCRAFT CARRIERS, THE TYCOM WILL PERFORM THE IMMEDIATE SUPERIOR IN COMMAND (ISIC) FUNCTIONS OF THIS CHAPTER.

a. During a maintenance action, a DFS is required for lack of compliance with cognizant documents, drawings, etc. For "as found" conditions during maintenance, the ISIC, ship and Fleet Maintenance Activity (FMA) (if involved) must evaluate the non-compliance using the guidance of paragraph 8.2.4 and 8.2.5 of this chapter.

b. For "as found" conditions or equipment failures during operations that result in non-compliance with cognizant documents, drawings, etc., the ship and/or ISIC (if in port) must evaluate the condition or failure using the guidance of paragraph 8.2.4 and 8.2.5 of this chapter to determine if the non-conforming condition meets the criteria as a Major DFS. If not, no DFS is required and the non-conforming condition will be entered in the ship's Current Ship's Maintenance Project (CSMP). If at sea, the guidance of paragraph 8.3.8 of this chapter will be followed.

8.2.1 Reporting Departures from Specification. It is incumbent upon ships, FMAs, and ISICs to discuss potential DFS as early as possible (prior to the work close out or component assembly if possible) to determine direction of actions, and alternatives to the DFS. Every effort must be made to correct each deficiency prior to equipment/system operation or underway of the ship. If a DFS has to be submitted, the request for it must be processed as soon as possible to enable a technical evaluation of the DFS request and final adjudication from the TYCOM.

8.2.2 Types of Departures from Specification. A DFS is classified as either Major or Minor depending on its significance. Major DFS are described in paragraph 8.2.4 of this chapter. Minor DFS are described in paragraph 8.2.5 of this chapter. Care must be exercised in evaluating and determining the type of DFS. All submarine DFS must be approved prior to ship's underway for submerged operations.

8.2.3 Permanent and Temporary Approval of Departure from Specification. DFSs are approved as either permanent or temporary depending on the nature of the non-compliance and technical determination of whether the condition needs to be repaired.

a. A temporary DFS requires subsequent action to correct the non-compliance and is approved with specific direction regarding duration and actions necessary to clear. A Major DFS accepting a temporary repair or condition is approved by the TYCOM following concurrence by an Authorized Technical Authority. A Minor DFS accepting a temporary repair will be approved by the TYCOM or ISIC as specified in paragraph 8.2.5 of this chapter.

b. Temporary deviation/waivers initiated by the Authorized Technical Authority per reference (a) require TYCOM concurrence prior to approval.

c. A permanent DFS requires no additional repair effort and is approved by NAVSEA. Technical Authority within NAVSEA for approval of a permanent DFS is specified in reference (a). As an exception, a permanent DFS may be approved only by the TYCOM or ISIC as specifically allowed in

paragraph 8.2.5.a. of this chapter when previously approved precedent setting documentation that directly applies to the DFS exists. The specific NAVSEA precedent must be referenced in the DFS approval.

NOTE: PARAGRAPH 8.2.4 OF THIS CHAPTER DOES NOT APPLY TO THE CATEGORY OF DFSs FOR CRANES COVERED UNDER REFERENCE (e). REFERENCE (e) LISTS THE CATEGORY REQUIREMENTS AND LEVEL OF APPROVAL FOR CRANE RELATED DFSs.

NOTE: AN OUT-OF SPECIFICATION PARAMETER IN A SUBMARINE FLY-BY-WIRE SHIP CONTROL SYSTEM FUNCTION MEASURED BY URO/MRC 019 IS ALSO CONSIDERED A MAJOR NON-CONFORMANCE WHETHER OR NOT THE URO/MRC IS DUE FOR ACCOMPLISHMENT. URO MRC 019 PROVIDES THE REQUIREMENTS FOR PROCESSING URO MRC RELATED NON-CONFORMANCES.

NOTE: THE BELOW LISTING IS NOT ALL INCLUSIVE AND SITUATIONS MAY ARISE WHERE DEFICIENCIES NOT LISTED MAY BE OF SUCH A NATURE TO WARRANT A MAJOR DFS. FOR EACH DEFICIENCY DETERMINED TO DIRECTLY INVOLVE SAFETY OF SHIP, SAFETY OF PERSONNEL, OR CAUSE A REDUCTION IN THE INTEGRITY OR OPERABILITY OF EQUIPMENT ESSENTIAL TO SHIP'S MISSION, A MAJOR DFS SHALL BE ISSUED.

8.2.4 Major Departure from Specification. A major DFS is one that affects (a) performance; (b) durability; (c) reliability or maintainability; (d) interchangeability; (e) effective use or operation; (f) weight or appearance (where a factor); (g) health or safety; (h) system design parameters such as schematics, flow, pressures, or temperatures; or (i) compartment arrangements or assigned function. The following list identifies some deficient conditions which require a major DFS:

NOTE: IN SOME INSTANCES, THESE MAJOR DEPARTURES MAY SUBSEQUENTLY BE RECATEGORIZED BY THE LOCAL TECHNICAL AUTHORITY FROM MAJOR TO A MINOR IN ACCORDANCE WITH REFERENCE (a).

a. Use of unapproved joint design or additional joints.

b. Non-conformances to plan specifications that result in a change in configuration. Examples are:

(1) Non-conformances to plan specifications resulting in a change in configuration or dimensions to pressure boundary parts or components. Examples would be "as found" dimensional or clearance differences from plan requirements for a Submarine Safety (SUBSAFE) valve bonnet and no authorization (e.g., Ship Alteration, Alteration and Improvement, Engineering Change Notice or NAVSEA letter) is available.

(2) Non-conformances to plan specification resulting in a change in configuration considered to be a permanent repair to pressure boundary parts. An example would be replacement of a failed valve of older design with one of more recent design because valves of the older design are no longer available and no authorization (e.g., Ship Alteration, Alteration and Improvement, Engineering Change Notice, NAVSEA letter) is available.

c. Failure to meet all applicable standards for major repairs unless other alternatives are authorized by this volume. Examples are linear indications, failed tightness test, hydrostatic test, use of unqualified welder/brazer, failed radiography, inadequate bond during brazing, etc.

d. Pipe or component wall thickness below minimum specification without restoration. Epoxy and shim methods for ball valve repairs are not considered restorations of component wall thickness.

e. Manufacture of a part or component without use/availability of applicable technical documentation (e.g., manufactured per sample due to non-availability of detailed drawings), regardless of whether the repair is considered temporary or permanent. A DFS is not required if the part or component is non-

level and in a non-controlled system, it is fabricated from the correct material and the lack of technical documentation does not affect: performance, durability, reliability or maintainability, interchangeability, use or operation, weight or appearance (where a factor), health or safety, or system design parameters.

f. Failure to complete required retest of a SUBSAFE/Level I/Submarine Flight Critical Component (SFCC) component or system.

g. Leakage from a SUBSAFE/Level I hull fitting, piping system, or component as follows:

(1) Hull valve/fitting to hull flange leakage.

(2) Leakage or weepage through a component body or pipe wall. Completion of temporary repairs (e.g., plastic pipe patch) does not negate the requirement for a DFS.

(3) Leakage or weepage from a welded or brazed joint. Completion of temporary repairs (e.g., plastic pipe patch) does not negate the requirement for a DFS.

h. Installation of new pressure boundary parts which do not meet all applicable material certification requirements. The following are some departable conditions:

(1) (Submarines only) Non-Level I valve internals (e.g., ball, disc, poppet, flapper) installed in seawater or sea-connected hull valves and backup valves.

(2) Non-Level I weld rod, insert material, brazing filler, etc. installed in a SUBSAFE/Level I system welded or brazed joint.

(3) Non-Level I pressure boundary parts (e.g., stem, bonnet, studs, nuts) installed in or on SUBSAFE or Level I components or systems.

i. (Submarines only) For any Unrestricted Operation (URO) Maintenance Requirement Card (MRC) measured parameter found out of tolerance and not restored, whether the MRC is due or not.

j. (Submarines only) Failure to complete any URO MRC within required periodicity.

(1) Non-conformance requests that result in a change of the URO MRC inspection periodicity (not authorized by the MRC), a change in a URO MRC technical requirement, or deferral of required work require NAVSEA approval. TYCOM or Authorized Technical Authority approval is not authorized for these non-conformances.

(2) To support operational commitments, TYCOMs may authorize temporary periodicity extensions (not authorized by MRC) after consultation with NAVSEA 07T. The periodicity extensions should be limited to the next availability or in port period, where a submarine maintenance activity is available, and shall be documented by a major DFS. The DFS shall then be submitted to NAVSEA for approval.

(3) When a URO/MRC periodicity becomes due during a maintenance availability, a DFS is not required when the TYCOM/ISIC takes positive actions to restrict submerged operations. Prior to the ship conducting submerged operations, all URO/MRC requirements must be complied with or a Major DFS must be approved.

k. (Submarines only) For all submarine hatch (Logistics Escape Trunks, Lock Out Chambers, Logistic Plug Trunks, etc.) deficiencies which will not be repaired prior to ships underway involving the following:

(1) Non-operational submarine access hatch. (Upper Hatch Operability and Remote Operating Devices)

(2) Hatch clearance reading out of specification. (Hatch-to-Seat Clearance)

(3) Locking ring hatch lug alignment out of specification. (Coaming Lugs and Locking Rings)

(4) Locking ring hatch/trunk coaming lug metal to metal contact out of specification. (In Service Lug Engagement)

(5) Hatch gasket groove and hatch trunk seating surface out of specification. (Gasket and seating surface inspection)

l. (Submarines only) Non-operational Emergency Main Ballast Tank Blow Valve, seawater system hull or backup valve, Modified After Signal Ejector/signal ejector muzzle ball valve, salvage air valve, etc.

m. (Submarines only) Failure to complete any category "A" Alteration and Improvement.

n. (Submarines only) A fault condition or unsatisfactory test within the SFCC Boundary indicates a deficiency with a safety critical function per reference (f) and shall be classified as a Major non-conformance under the following conditions:

(1) When the system design employs more than two redundant SFCCs and a deficiency degrades the redundancy to only two remaining SFCCs.

(2) When the system design employs two redundant SFCCs or a non-redundant SFCC and a deficiency results in the loss of a SFCC.

o. Headed fasteners locally manufactured from Level I material (i.e., capscrews, bolts, machine screws, etc.) which have not been certified by tensile and hardness testing specified in MIL-DTL-1222 (Studs, Bolts, Screws and Nuts for Applications Where a High Degree of Reliability is Required; General Specification for) or FF-S-86 (Federal Specification, Screw, Cap, Socket Head) as applicable.

p. (Submarines only) All high pressure compressed gas flasks designed to MIL-F-22606 specifications shall be recertified at intervals not to exceed 20 years for SSN 688, SSN 21 and SSN 774 Classes and 21 years for SSBN/SSGN 726 Class. High pressure air moisture separator flasks shall be recertified at an interval not to exceed ten years for SSN 688, SSN 21, SSBN/SSGN 726 and SSN 774 Classes. All oxygen and gas management separator flasks designed to MIL-F-24032 specifications shall be recertified at an interval not to exceed nine years for SSN 688 and SSN 21 Classes and SSBN/SSGN 726 Class. A major DFS, approved by NAVSEA, is required for any flask that will exceed the recertification periodicity.

q. (Submarines only) Propulsion shafts shall be replaced at intervals not to exceed six years for SSBN/SSGN 726 Class, seven years for SSN 688 and SSN 774 Classes and ten years for SSN 21 Class. A major DFS, approved by NAVSEA, with supporting operating information, including shaft turn count since shaft installation is required for shafts that will exceed planned replacement periodicity.

8.2.5 Minor Departure from Specification. A DFS which is not a Major DFS as defined in paragraph 8.2.4 of this chapter is considered to be a Minor DFS. All permanent Minor (and Major) DFSs will be approved by NAVSEA except those identified in paragraph 8.2.5.a. of this chapter, which may be dispositioned by the TYCOM or the ISIC. Temporary Minor DFSs identified in paragraph 8.2.5.b. of this chapter may also be dispositioned by the TYCOM or the ISIC. All other temporary Minor DFSs will be approved by the TYCOM. Paragraphs 8.2.5.a. through e. below identify some deficient conditions which require a Minor DFS:

a. Any condition which could be considered a Major DFS except for the fact that specific and definite (TYCOM or NAVSEA) guidance is available based on documented action for another identical (same component, same application, and same class ship) request in which no restriction was imposed. An example would be a previous DFS which was approved as a precedent setting DFS.

b. Any condition which is associated with exemptions/alternatives to non-nuclear retest requirements in Section 7.4 of Part I, Chapter 7, of this volume on testing, except where noted. Examples are:

NOTE: IF A MAINTENANCE CERTIFICATION RECORD/RE-ENTRY CONTROL IS CLOSED BY TRANSFERRING AT SEA TESTING TO A DFS (E.G., CONTROLLED DIVE TO TEST DEPTH FOR RETEST OF A PERISCOPE HULL GLAND, CONTROLLED DIVE FOR RETEST OF A SEA CONNECTED SYSTEM (E.G., MAIN SEAWATER, AUXILIARY SEAWATER) IN LIEU OF JOINT TIGHTNESS TEST TO "J" PRESSURE OF TEST PRESSURE DRAWING (TPD)), THE SHIP WILL BE RESTRICTED IN DEPTH AS REQUIRED IN PART I, CHAPTER 5, PARAGRAPH 5.10.5 OF THIS VOLUME.

(1) (Submarines only) DFS for controlled dive following re-installation of a periscope.

(2) (Submarines only) DFS for controlled dive following work on a hatch exposed to sea pressure.

(3) (Submarines only) DFS for controlled dive following work on an Electrical/Electronic Hull Fitting.

c. Associated with a temporary repair to a system or component not involving ship or personnel safety or not involving integrity or operability of equipment essential to ship's mission.

d. For any as found condition discovered during a maintenance action that will not be corrected prior to the ship's underway, and is not categorized as a Major DFS in accordance with paragraph 8.2.4 of this chapter.

e. (Submarines only) Material deficiencies in the SUBSAFE boundary that were discovered outside a regularly scheduled FMA upkeep (excluding voyage repair and planning availability). These deficiencies will be tracked with a CSMP entry and scheduled for repair during the next regular upkeep after the discovery of the non-conforming condition. Deferral of the repair past the next upkeep will require a Minor DFS with proper justification as to why the condition was not corrected during the upkeep and any supply information for outstanding repair parts that were not repaired during subsequent regularly scheduled availability (excluding voyage repair and planning availability).

f. (Submarines only) Temporary DFSs initiated to document missing or damaged Special Hull Treatment (Molded in Place or tile), removed from external structure, DO NOT require NAVSEA approval, shall be marked minor and can be approved by the ISIC when the following conditions are met:

(1) The submarine is not currently in a Depot Level Availability.

(2) Repairs are conducted in accordance with the requirements of the class specific hull treatment repair and maintenance manual.

(3) Visual inspection and reporting of substrate conditions underneath Molded in Place/Special Hull Treatment removal sites shall be as follows:

Inspections not performed in an availability (any type), when qualified inspectors such as: (Civilian hull inspectors' (surveyors) and technical evaluators' training and experience shall be documented and acceptable to the Chief Engineer (or equivalent) of the inspecting activity. Civilian Nondestructive Test inspectors certified for Visual Testing in accordance with the

requirements of reference (c) and familiar with hull structural survey. Hull Technicians (HT-2 or higher), who are trained and experienced in submarine hull structural inspections or Nondestructive Test inspectors certified in Visual Testing in accordance with the requirements of reference (g) in addition to reference (h), who are familiar with hull structural survey.) are not available, Ship's Force shall inspect to the best of their ability and report back to the TYCOM any areas of extensive corrosion or damage.

(4) The repair site(s) documented on the DFS CANNOT exceed a combined size equal to 1 standard tile (4 square feet).

(5) The clearance date for the DFS CANNOT exceed the next scheduled Depot Level Availability.

(6) Extensions of temporary DFSs, as a result of availability schedule shift, do not require NAVSEA approval as long as the extension does not exceed the next scheduled Depot Level Availability.

8.3 DEPARTURE FROM SPECIFICATION PROCEDURES.

NOTE: FOR SURFACE SHIPS AND AIRCRAFT CARRIERS, THE TYCOM WILL PERFORM THE ISIC FUNCTIONS OF THIS CHAPTER.

8.3.1 General Administrative Requirements. The following requirements pertain to all DFSs:

a. Requests for DFS will be submitted, approved and cleared in accordance with paragraph 8.3.7 or 8.3.8 of this chapter. The Web Based Electronic Departure from Specification (E-DFS) and Electronic Waiver and Deviation (E-W/D) programs are acceptable for use unless directed otherwise by the respective TYCOM.

NOTE: THE FORMS (QUALITY ASSURANCE (QA) FORM 12, QA FORM 12A) MENTIONED IN THE FOLLOWING DISCUSSION ARE COMPLETED ELECTRONICALLY WHEN USING E-DFS or E-W/D.

NOTE: WHEN USING A NAVAL MESSAGE TO REQUEST A DFS OR REPORT A COMMANDING OFFICER APPROVED DFS THE EXACT FORMAT SHOWN IN APPENDIX A WILL BE USED. EACH PARAGRAPH IN THE NAVAL MESSAGE WILL HAVE A PARAGRAPH NUMBER, THE PARAGRAPH TITLE AND A COLON. ANY DEVIATION IN THE FORMAT MAY CAUSE A PROBLEM WITH THE AUTOMATIC DFS PROCESSOR. IF THE SHIP IS UNABLE TO CONNECT TO THE WEB-BASED ELECTRONIC NON-CONFORMANCE PROGRAM, A DEPARTURE MAY BE REQUESTED BY NAVAL MESSAGE USING THE FORMAT OF APPENDIX A.

b. Requests for DFS will be normally submitted on a QA form 12. The approval of the DFS will normally be made on the QA form 12. If unable to use QA form 12, use the message format of Appendix A. Surface ships that are not able to generate a DFS using E-DFS have the option of generating DFS per existing message based system or Command E-mail. The Command E-mail shall be approved by the ship's Commanding Officer or his designated representative.

c. The ship is responsible for all approved DFS relating to its systems/components until cleared or canceled. When a DFS is approved as a temporary repair requiring rework to correct the discrepancy, a CSMP entry for correction of the discrepant condition will be initiated by the ship or ISIC. The ship's Quality Assurance Officer (QAO) will ensure that this action is done. Verify an active Job Control Number (JCN) exists for all active temporary DFSs at the completion of all scheduled Fleet maintenance activity availabilities, major or minor, Chief of Naval Operations availabilities or at least quarterly and maintain an auditable record of the verification until superseded.

d. The ISIC is responsible for all DFSs which have been approved or forwarded to TYCOM for approval until the DFS is cleared, canceled or formally transferred to another TYCOM. The ISIC is also responsible for ensuring that the CSMP entry is annotated on the DFS for temporary repairs.

e. All DFS must be reported and controlled. Each activity must have an auditable system for reporting and controlling DFS. Deviation/waivers will be retained and tracked in an auditable fashion within the DFS system by Ship's Force and the ISIC/TYCOM until permanent documentation is confirmed to reflect the specific non-compliance. Use of the Web Based E-DFS or E-W/D programs will facilitate meeting these requirements.

f. When work performed results in a DFS and requires future action (e.g., re-inspection, repair), the ship will submit an OPNAV 4790/2K (or equivalent) with a new Job Sequence Number. The CSMP Job Sequence Number will be included in Block 17 of the DFS. This Job Sequence Number will be added to the DFS prior to submission to the ISIC. The DFS or waiver will be retained in an auditable fashion with the DFS file. DFSs and waivers written exclusively to transfer accountability for testing do not require an OPNAV 4790/2K (or equivalent) with a new Job Sequence Number.

g. To preclude last minute ship's operational delays, DFS should be processed as early as possible. Any request for approval for a DFS must contain all pertinent information on materials, processes, testing and procedures used, so that a complete and educated engineering evaluation can be made by the TYCOM, Local Technical Authority or System Command. For a DFS initiated by a depot level activity, the ISIC will provide the JCN and the DFS serial number to the depot level activity when requested. For carrier repair activities, the Web-Based Electronic Non-Conformance program will automatically supply the next open DFS serial number.

h. The activity originally requesting the DFS will track the DFS until it is approved/disapproved.

i. For any DFS, Non-Conformance, deviation or waiver that has been adjudicated, the approving activity is required to provide a copy of the DFS, Non-Conformance, deviation or waiver to the ship's QAO for retention and tracking per paragraph 8.3.1e. of this chapter.

j. (Submarines only) All departures shall be adjudicated prior to the ship getting underway for submerged operations.

8.3.2 Review of Outstanding Departures from Specification. Commands responsible for tracking approved DFS will review them prior to each upkeep to establish FMA/shipyard work requirements to clear the DFS. DFSs should be cleared as soon as possible based on:

a. Approval as a permanent repair.

b. Condition has been corrected.

c. Condition is no longer applicable as a result of an alteration.

d. Condition is no longer applicable as a result of a change in the specification that originally resulted in the DFS request.

8.3.3 Clearing of Departure from Specification by Exposing Sea Connected Systems and Hull Integrity Boundary Items to Submergence Pressure (Submarines only). SUBSAFE certified submarines will submerge to 95% of design test depth, as a minimum, as measured to the keel, for clearing certain "Controlled Dive" DFSs. Satisfactory completion of the test and clearance of the DFS will be in the format of QA form 12A. If unable to use QA form 12A, use message format of Appendix B.

8.3.4 Incorporation of Departure from Specification in Selected Record Drawings/Data or Technical Variance Documentation.

a. Those DFSs for a change in configuration which NAVSEA accepts as a permanent repair will be maintained in an auditable file by the ship and the ISIC until reflected in ship's selected record drawings/data or technical variance documentation. Examples are:

(1) An oversized shaft and bushing.

(2) A seal welded mechanical joint.

(3) Addition of piping joints or fittings.

(4) Different style/type valve.

b. For DFS approved as a permanent repair for material/component substitution, the ship will ensure that a Ship's Configuration Change Report (OPNAV 4790/CK) and a Fleet COSAL Feedback Report (NAVSUP 1371) are submitted to ensure accurate configuration accounting and technical/supply support are maintained.

c. The activity causing or discovering the non-conformance/departable condition that the DFS approved as a permanent repair, and affects selected drawings and records, will provide a copy of the marked up drawing to Ship's Force prior to underway and will forward a copy of the applicable portions of the work package and a marked up copy of the affected drawing or record to the planning yard as soon as practical. The ship and accomplishing activity will maintain a copy of the correspondence until the technical variance documentation or selected record drawing is issued.

8.3.5 Preparations for Correction of Departure from Specification and Clearance During Depot Level Availabilities. The following procedures will be used to schedule DFS for correction and report correction of DFS in depot level availabilities:

a. Ship's Force and/or the parent ISIC will provide copies of DFS outstanding at the Availability Planning Conferences for incorporation into the work package as required by the Availability Baseline Work Package.

b. DFS deferred to a Depot Availability for correction must be cleared by the submission of a QA form 12A as the shipyard accomplishes the work or upon completion of shipyard period, provided that the shipyard "scope of work" corrected the DFS. Completion reports from shipyards are not required. These forms are submitted by Ship's Force to the ISIC. If unable to use a QA form 12A, use the message format of Appendix B.

8.3.6 Numbering of Departures from Specification. All DFSs will be identified by a unique sequential number issued by the affected ship. The sequential number will consist of the ship's designation and hull number, a hyphen, the sequential number portion, a hyphen, and the last two digits of the year (e.g., SSN 674-13-90, CVN 70-30-94). DFSs already assigned a number under another numbering system will be retained, as there is no intent to revise the numbers already used. DFSs established using the Web Based E-DFS or E-W/D programs will use the numbering conventions of those systems. Approved temporary departures requiring extension will not be assigned new Departure numbers.

8.3.7 Submission and Approval of Departures from Specification. The activity finding or causing a DFS will normally report the DFS to the appropriate approval authority using either a QA form 12, a naval message or electronically using the E-DFS or E-W/D programs. The DFS Request will be completed in accordance with the instructions. If unable to use QA form 12 or the electronic web based programs, use the naval message request format of Appendix A.

NOTE: IN THE FOLLOWING SECTION, IF USING E-DFS OR E-W/D, WHEN IT IS DIRECTED THAT THE QA FORM 12 IS SIGNED, AN ELECTRONIC SIGNATURE IS IMPLIED. ISIC AND UNITS ASSIGNED TO TYCOMs UTILIZING THE E-DFS OR E-W/D SYSTEMS WILL SUBMIT DFSs TO THE TYCOM VIA THE E-DFS OR E-W/D PROGRAMS. THESE PROGRAMS REQUIRE A USER IDENTIFICATION AND PASSWORD SUPPLIED BY THE TYCOM. THE FOLLOWING PROCESSES WILL BE EXECUTED UNDER THE E-DFS AND E-W/D PROGRAMS USING THE ELECTRONIC VERSION OF THE QA FORM 12 AND QA FORM 12A. THE SIGNATURES WILL BE ONLY THE PRINTED NAME AND TITLE OF THE INDIVIDUAL. SHIPS WITHOUT UNCLASSIFIED INTERNET ACCESS MAY SUBMIT DFSs AND DFS CLEARANCES TO THE ISIC VIA A MANUALLY PREPARED QA FORM 12/QA FORM 12A, THE STAND-ALONE MS ACCESS DATABASE FORMAT OR MESSAGE FORMAT IF AT SEA.

a. The Work Center Supervisor/Leading Petty Officer/Craftsman/Quality Assurance Inspector will fill out the applicable portion of the QA form 12, ensuring the extent of the DFS and the recommendation for repair/re-certification must be clearly and completely stated, and deliver, after review by the cognizant division officer, to:

(1) For ship initiated DFS, the Ship's QAO or in his/her absence the Ship's Duty Officer.

(2) For FMA initiated DFS, the FMA QAO or in his/her absence the FMA Repair Duty Officer.

b. The QAO or designated representative will:

(1) Review the QA form 12 for technical adequacy, accuracy, and completeness.

(2) Determine the latest time the answer must be received in order to carry out the ship's schedule, obtain and enter the next consecutive number from the affected ship's DFS log. For aircraft carriers, the numbering convention assigned by the Web Based E-DFS or E-W/D programs when submitting the DFS will be used.

(3) Deliver/forward to Department Head (ship)/Repair Officer (FMA).

c. For ship initiated DFS, Ship Department Head (in his/her absence Ship's Duty Officer) will:

(1) Review the QA form 12 for technical adequacy, accuracy, and completeness.

(2) Sign the QA form 12 and deliver/forward to the cognizant ISIC QAO (in his/her absence ISIC Duty Officer).

d. For FMA initiated DFS, FMA Repair Officer (in his/her absence his/her designated representative) will:

(1) Review the QA form 12 for technical adequacy, accuracy, and completeness.

(2) Sign the QA form 12 and deliver/forward it to the cognizant ISIC QAO (in his/her absence ISIC Duty Officer).

e. For Depot initiated temporary waivers and deviations, responsible Depot personnel will:

(1) Review the waiver or deviation for technical accuracy, adequacy, and completeness.

(2) Utilize, prepare and sign a QA form 12 or E-DFS/E-W/D to document, attach the QA form 12 to the waiver or deviation and deliver/forward it to the cognizant ISIC representative QAO (in his/her absence the ISIC Duty Officer) for review and concurrence prior to approval. For a DFS initiated by a depot level activity, the ISIC will provide the JCN and the DFS serial

number to the depot level activity when requested. For carrier repair activities, the Web-Based Electronic Non-Conformance program will automatically supply the next open DFS serial number.

(3) The ISIC representative QAO will review and concur with the waiver or deviation by signing the ISIC block of the QA form 12 or electronically signing in E-DFS/E-W/D prior to Depot approval and return the waiver or deviation to the Depot. For temporary waivers and deviations, the ISIC representative will contact the Ship's Maintenance Planner or the Ship's QAO for a JCN and a Departure serial number (if required) prior to returning the waiver or deviation to the Depot.

f. The cognizant ISIC QAO (in his/her absence his/her designated representative) will:

(1) Review the QA form 12 for technical adequacy, accuracy, and completeness.

(2) Issue instructions regarding clearance and approve/disapprove and return QA form 12 to the Department Head (Ship)/Repair Officer (FMA) for action and/or filing in QA files.

(3) Deployed Ships ISICs will ensure parent ISIC is an information addressee on all QA form 12s.

g. Approval/disapproval of a DFS by the TYCOM or NAVSEA will be noted on the QA form 12.

h. Upon completion of corrective action, the DFS will be cleared by the ship using the format of QA form 12A. The TYCOM will be informed by copy of QA form 12A or via message, when a major temporary DFS is cleared. The NAVSEA or TYCOM approval of a permanent repair requires no further administrative action.

NOTE: DO NOT DELETE ANY INFORMATION FROM AN E-DFS OR E-W/D ITEM THAT HAS RECEIVED TEMPORARY APPROVAL FROM EITHER THE ISIC, TYCOM OR AUTHORIZED TECHNICAL AUTHORITY.

NOTE: THE ABILITY TO ADD COMMENTS TO AN APPROVED DFS IS LIMITED BY THE ELECTRONIC SYSTEM'S ASSIGNED LEVEL OF ACCESS (I.E., ISICs CAN ADD COMMENTS ONLY TO THE ISIC PORTION OF THE DFS FORM).

8.3.8 Departure from Specification Approval and Reporting for Ships While at Sea or at a Port Without a Fleet Maintenance Activity.

8.3.8.1 Evaluation. The Commanding Officer will evaluate any DFS and approve the corrective action to be taken including any necessary restrictions. The Commanding Officer will issue directions regarding clearance and approve/disapprove the DFS and return the QA form 12 to the Department Head for action and/or filing. For any Commanding Officer approved DFS, a report of the condition and intended action will be made at the first opportunity to the ship's ISIC/TYCOM utilizing either a naval message in the "EXACT" format of Appendix A or the E-DFS or E-W/D programs.

8.3.8.2 Condition not Corrected. If the condition is not planned to be corrected or cannot be corrected during the next inport period (a port with a fleet maintenance facility), the Commanding Officer approved DFSs must be submitted to the applicable approval authority for adjudication prior to getting underway.

a. (Submarines only) All departures shall be adjudicated prior to the ship getting underway.

b. (Aircraft Carriers and Surface ships only) In the event the DFS evaluation is not completed prior to the ship's underway, the Commanding Officer approved DFS will remain in effect until the evaluation is completed and disposition provided.

NOTE: AN EXTENDED DEPARTURE WILL NOT BE ASSIGNED A NEW DEPARTURE NUMBER THAT CANCELS AND/OR SUPERSEDES THE ORIGINAL DEPARTURE NUMBER.

8.3.9 Extending a Temporary Departure. In the event that a departed condition will not be corrected by the expiration date, the Ship's QAO is responsible to submit the departure(s) to the ISIC requesting an extension. The extension request will explain why the departure will not be corrected. The extension request shall be made sufficiently in advance to allow the evaluation process to be completed before the expiration date. The Departure extension will be routed to the same level of approval authority as the original Departure.

a. Non-conformances are expected to expire. It is acceptable for non-conformances to expire while the ship or Deep Submergence System (DSS)/Scope of Certification (SOC) asset is in a scheduled availability.

b. (Submarines/DSS/SOC assets only) Expired non-conformances must be adjudicated prior to at sea operation and/or prior to manned use for DSS/SOC systems/assets.

c. Extension requests via the E-DFS program shall be accomplished using the Request Extension feature accessed by clicking the associated button at the top of the QA form 12 for the most recent approved active DFS extension. Changes to an existing non-conformance in the E-DFS program that do not affect the expiration date shall be accomplished by submittal of an “UPDATE” as directed in paragraph 8.3.10.c of this chapter.

d. The Request Extension feature is not included in the E-W/D program. Extension requests via the E-W/D program shall be accomplished by submittal of an “UPDATE” as directed in paragraph 8.3.10.c of this chapter.

8.3.10 Electronic Non-Conformance Administration.

a. User access requires TYCOM or initiating agencies Point Of Contact (POC) approval for all levels of access.

b. All attachments to the electronic non-conformances are preferred to be in Adobe Acrobat PDF format. If another format is used, ensure it is one that is readily available on government computers, such as Microsoft Word or Excel format. Non-conformances with attachments that cannot be opened by the ISIC or TYCOM will be rejected.

c. Changes to an existing electronic non-conformance is normally accomplished by submittal of an "UPDATE" to the QA form 12.

(1) To enter changes, the initiator of the change will enter the current calendar date and the word "UPDATE": in the user's comment block followed by the relevant information and ending the comments with the user Name, Rank (if applicable) and Title. Do not write over any existing comments, Names or dates in the comment block.

(2) Changes or Updates shall be disseminated via an e-mail alert.

(3) Deletion of QA form 12s will not be supported. Clear or cancel QA form 12s with a QA form 12A.

d. Naval Sea Logistics Center (NAVSEALOGCEN) assistance is required to change an archived non-conformance. NAVSEALOGCEN will use the following process to change an electronic non-conformance:

(1) Database non-conformance changes (change to a QA form 12) will only be accomplished if requested by the TYCOM or the initiating agencies POC.

(2) Archived non-conformances requiring changes which were signed by multiple TYCOMS and/or multiple initiating agencies:

(a) Requires e-mail concurrence of all POC signatory users to the non-conformance prior to NAVSEALOGCEN making database changes or unarchiving the non-conformance (i.e., Supervisor of Shipbuilding/TYCOM/NAVSEA signed QA form 12).

(b) If a non-conformance is unarchived to allow TYCOMs or agency users to make changes, change will be accomplished in accordance with the requirement cited in paragraph 8.3.10.c. above.

(c) Each signatory level user should indicate their concurrence to the change in accordance with the requirement cited in paragraph 8.3.10.c. above.

(3) Archived non-conformances requiring change which were signed by a single TYCOM and/or single initiating agency:

(a) Requires e-mail concurrence of the POC signatory user to the non-conformance prior to NAVSEALOGCEN making database changes or unarchiving the non-conformance (i.e., Supervisor of Shipbuilding/TYCOM/NAVSEA signed QA form 12).

(b) If a non-conformance is unarchived to allow a TYCOM or agency user to make changes, change will be accomplished in accordance with the requirement cited in paragraph 8.3.10.c. above.

8.4 NUCLEAR COGNIZANT AREAS. Request for DFS for nuclear systems will be neither requested nor approved. If a ship or FMA has a question, problem, or is unable to comply with nuclear specifications, request for technical resolution will be made using a LAR. Formal resolution of the LAR is required prior to reactor plant or propulsion plant startup.

8.4.1 Nuclear Powered Surface Ships. A memorandum of agreement exists between NAVSEA Nuclear Propulsion Directorate (08) and NAVSEA PMS 312/335 that details the division of responsibilities within the propulsion plants of nuclear powered ships. This may be useful to Forces Afloat as an aid in directing inquiries and correspondence and has been distributed to all nuclear surface ships as a NAVSEA letter Ser 08J/C90-5873, dated 7 AUG 90.

8.4.2 Reactor Plant Systems. If a nuclear powered ship or nuclear capable FMA is unable to comply with specifications for reactor plant systems or components listed in enclosure (1) to reference (i) and also those systems identified as nuclear by the appropriate nuclear/non-nuclear interface diagram (references (b) and (c)), then a review of NAVSEA 08 requirements shall be requested. In general, technical resolution to questions or problems for reactor plant systems or components requires use of a liaison inquiry according to the requirements of references (b) and (c).

a. References (b) and (c) provide the requirements on submission of LARs for nuclear powered surface ships and submarines.

NOTE: LARs SUBMITTED MUST CONTAIN ALL INFORMATION REQUIRED BY REFERENCE (b) AND REFERENCE (c) TO ENSURE A RAPID, ACCURATE RESPONSE.

b. Reference (d) provides the requirements on submissions of LARs for nuclear support facilities.

c. A LAR should not be submitted for cases of out of specification seat leakage of nuclear valves after repairs. The Reactor Plant Planning Yard and Reactor Plant Prime Contractors do not have the authority to waive valve leakage specifications. When valve seat leakage exceeds reactor plant manual specification after attempted Ship's Force/FMA repairs, the following method may be used to defer rework and close out the Controlled Work Package (CWP):

NOTE: THIS ALTERNATIVE TO SATISFACTORY COMPLETION OF RETEST IS APPLICABLE ONLY TO VALVE SEAT LEAKAGE.

(1) The ship must inform TYCOM (via squadron/group for submarines) by message with an info copy to NAVSEA 08. The message must include a description of the initial problem, repairs conducted, seat leakage rate, leak specification, dates of next availability, status of paragraphs (2) through (5) below, and request for authorization to continue operation with out-of-specification seat leakage.

(2) All hydrostatic and tightness test requirements must be satisfactorily completed.

(3) All other portions of the CWP must be properly completed.

(4) A new maintenance deferred action must be submitted to the ISIC for repair of the valve seat leakage at the next FMA availability.

(5) The valve seat leakage must not constitute an operational problem (for submarines, Group/Squadron's determination and justification statement required).

(6) Based on Ship's justification statement, TYCOM will respond by message to all concerned regarding deferral of corrective maintenance. After satisfactory final review, close-out of the CWP can be made with an approved deferral of corrective maintenance in lieu of a satisfactory seat leakage test.

d. A liaison action file, with a sequential index and containing all submitted Nuclear LARs, shall be maintained by the originating activity. The file shall contain a copy of LARs submitted. A copy of the liaison action shall be kept with liaison requests in the Answered LARs section and in the CWP/Formal Work Procedure if applicable.

e. Request for DFS for nuclear systems will be neither requested nor approved. If a ship, FMA or shipyard has a question, problem or is unable to comply with nuclear specifications, request for technical resolution will be made using an LAR or Trouble Record.

8.4.3 Propulsion Plant Systems (Aircraft Carriers only). If a ship or FMA has a question, problem or is unable to comply with non-nuclear specifications, technical assistance is available from the Propulsion Plant Engineering Activity (PPEA). The PPEA was formed to provide an additional technical resource for assisting operational aircraft carriers with technical or operational issues not associated with Ship Alteration installation and configuration control. PPEA Liaison services are requested using the Steam Plant Action Request (SPAR). The SPAR allows the Fleet and overhaul activities to submit requests to the PPEA for technical assistance on non-Ship Alteration related issues; the SPAR is not intended to replace the LAR process described above or non-nuclear LARs submitted to the Hull Planning Yard in accordance with reference (j). The PPEA can request information, disseminate technical information associated with the Steam Plant to the Fleet/overhaul activities, or direct work that does not require a drawing change or affect system configuration control using the Steam Plant Liaison Inquiry. Procedures for preparing SPARs are discussed in reference (c).

(This Page Intentionally Left Blank)

APPENDIX A

DEPARTURE FROM SPECIFICATION REQUEST MESSAGE FORMAT

RTTUZYUW RUCBSRF0001 DDHHMM-UUUU--RUCBSUU.
ZNR UUUUU
R DDHHMMZ MMM YY ZYB
FM (COMMAND REQUESTING DFS)//
TO ISIC/TYCOM// (NOTE 1)
NAVSEALOGCEN MECHANICSBURG PA//
INFO COMNAVSEASYSCOM WASHINGTON DC// (NOTE 2 and 3)
ISIC//
COGNIZANT IMA//
SHIP//
SUBMEPP PORTSMOUTH NH//(URO PROGRAM MANAGER)// (NOTE 4)
PEO CARRIERS//PMS312// (AS APPLICABLE FOR CARRIERS)//
PEO THEATER SURFACE COMBATANTS//PMS400F// (AS APPLICABLE FOR COMBATANTS)//
PEO EXW//PMS470/PMS325// (AS APPLICABLE FOR AUXILIARIES, LITTORALS AND PATROL CRAFT)//
PEO MUW//PMS490// (AS APPLICABLE FOR MINE WARFARE)//
NAVSPECWARCOM/N84// (WHEN DDS IS INSTALLED)//
BT
UNCLAS (OR CLAS)//N04855//
MSGID/GENADMIN/ (COMMAND REQUESTING DFS)/0000/FEB//
SUBJ/DFS REQUEST FOR (SHIP AND HULL NUMBER AND DEPARTURE NUMBER ASSOCIATED WITH (COMPONENT/SHORT DESCRIPTION))/(NOTE 5)//
OR FOR A CO APPROVED DEPARTURE
NOTIFICATION OF COMMANDING OFFICER APPROVED DFS (SHIP AND HULL NUMBER AND DEPARTURE NUMBER ASSOCIATED WITH (COMPONENT/SHORT DESCRIPTION))/(NOTE 5)//
REF/A/DOC/COMFLTFORCOMINST 4790.3// (NOTE 6)
POC//
AMPN/REF A IS THE JOINT FLEET MAINTENANCE MANUAL// (NOTE 7)
NARR//(NOTE 7)
RMKS/1. DFS NUMBER:
2. SHIP & HULL NUMBER:
3. JCN:
4. CWP NUMBER:
5. DATE OF DFS:
6. ORIGINATOR:
7. DEPARTURE TYPE
   A. MAJOR:
   B. MINOR:
   C. SUBSAFE:
   D. SOC:
   E. FBW:
   F. SFCC:
8. DEPARTURE CLASSIFICATION
   A. DEVIATION:
   B. WAIVER:
   C. FBWDR:
9. SYSTEM/COMPONENT/LOCATION/ESWBS:
10. NAVSEA DRAWING/PLAN NUMBER/PIECE NUMBER:
11. REFERENCES:
12. APPLICABLE SPECIFICATIONS:
13. SITUATION/DEGREE OF NON-COMPLIANCE: (NOTES 8, 9 AND 10)
14. COMMENTS/RECOMMENDATION:

15. DATE ANSWER REQUESTED BY:
16. SUBMITTING ACTIVITY:
17. NEW JCN:
18. CO APPROVED DFS:
DECL: ODAR//
BT

NOTE: ENSURE MESSAGES ARE IN ACCORDANCE WITH NTP 3 FORMAT AND CURRENT PLAIN LANGUAGE ADDRESS DIRECTORY (PLAD) IS UTILIZED.

NNNN

NOTES:

1. Office codes for TYCOMs are: COMNAVAIRLANT N43/N9; COMNAVAIRPAC N434; COMNAVSURFLANT N434; COMNAVSURFPAC N434; COMNAVSURFLANT/AIRLANT SNPMTT N02NB; COMNAVSURFPAC N434 AND COMNAVAIRPAC N9/N434; PACIFIC FLEET CVNs – COMNAVAIRPAC N9/N434; COMNAVSURFLANT N434 AND COMNAVAIRLANT N9/N43; ATLANTIC FLEET CVNs - COMNAVAIRLANT N9/N43; COMSUBLANT N4322; COMSUBPAC N4, N4322.

2. Office codes for NAVSEA are: PMS 392 and SEA 07TC (All SSN and SSBN/SSGN); PMS 399 (DEEPSUBM and DDS); OOC (DDS and DLSS). For URO related DFS, also include the appropriate NAVSEA codes listed in the URO MRC.

3. Include NAVSEA 07Q for informational purposes on all SUBSAFE DFS messages. Include the applicable Program Manager at NAVSEA for informational purposes on all SOC DFS messages. Include the NAVSEA 07T for informational purposes on all Fly-By-Wire Ship Control System (FBW SCS) DFS messages.

4. Include SUBMEPP only on URO related DFS.

5. Comply with current annotation/declassification requirements for classified messages.

6. Year/Month/Day.

7. Enter date of most current revision.

8. When non-approved parts are used, identify part by NSN, Mil Spec, drawing and piece number and MIC level.

9. When DFS is the result of part non-availability, identify APL and NSN or drawing and piece number and state that the part is not available until (year, month, day) or unknown.

10. Where new welded or brazed pipe joints are added, state the welding or brazing procedure used. State the NDT procedure(s) used (if applicable). State completed, or to be completed tests.

INSTRUCTIONS:

1. From Line - Command requesting/submitting the DFS.

2. To Line - List the respective ISIC/TYCOM and NAVSEALOGCEN Mechanicsburg PA. (see note 1)

3. Info Line - Any additional activities that should receive a copy of this DFS message. (see notes 2, 3 and 4)

4. Subject Line - Must include one of the following:

For a standard DFS request, the subject line will start out with:

DFS REQUEST FOR (SHIP'S NAME AND HULL NUMBER, THE DEPARTURE NUMBER ASSOCIATED WITH THE REQUEST, THE COMPONENT AND/OR SHORT DESCRIPTION)

For a notification of a CO approved DFS the subject line will start out with:

NOTIFICATION OF COMMANDING OFFICER APPROVED DFS (SHIP'S NAME AND HULL NUMBER, THE DEPARTURE NUMBER ASSOCIATED WITH THE NOTIFICATION, THE COMPONENT AND/OR SHORT DESCRIPTION)

5. Reference Line - List all required references. (see note 6)

6. AMPN Line - Used if only one reference is listed. (see note 7)

7. NARR Line - Used if there are 2 or more references listed. (see note 7)

8. RMKS Section - Must be completed exactly as follows:

NOTE: THE COLONS MUST BE INSERTED EXACTLY AS SHOWN.

RMKS/1. DFS NUMBER: (enter the next sequential DFS number from the ship's DFS log. Note, this number may be changed during the input process due to previously entered departures that were entered prior to receipt of this message)

2. SHIP & HULL NUMBER: *(enter the ship's name and hull number)*

3. JCN: *(enter JCN of task that resulted in a discrepant condition or the lack of compliance)*

4. CWP NUMBER: *(enter the CWP serial number if a CWP was used or mark N/A if no CWP used)*

5. DATE OF DFS: *(enter the date the DFS was initiated)*

6. ORIGINATOR: *(name of person initiating the DFS)*

7. DEPARTURE TYPE *(at least one item under departure type will be YES. For submarines a yes will be entered by SUBSAFE, SOC, FBW and SFCC as needed)*

A. MAJOR: *(enter either YES or leave blank)*

B. MINOR: *(enter either YES or leave blank)*

C. SUBSAFE: *(enter either YES or leave blank)*

D. SOC: *(enter either YES or leave blank)*

E. FBW: *(enter either YES or leave blank)*

F. SFCC: *(enter either YES or leave blank)*

8. DEPARTURE CLASSIFICATION *(either DEVIATION or WAIVER will have a YES after it. FBWDR will be followed by YES if applicable for submarines)*

A. DEVIATION: (*enter either YES or leave blank)*

B. WAIVER: *(enter either YES or leave blank)*

C. FBWDR: *(enter either YES or leave blank)*

9. SYSTEM/COMPONENT/LOCATION/ESWBS: *(enter the system/component affected, location and ESWBS if known)*

10. NAVSEA DRAWING/PLAN NUMBER/PIECE NUMBER: *(enter the NAVSEA drawing number, plan number and piece number)*

11. REFERENCES: *(enter applicable references)*

12. APPLICABLE SPECIFICATIONS: *(enter applicable specifications)*

13. SITUATION/DEGREE OF NON-COMPLIANCE: *(enter a description of the problem including all the pertinent information.) (see notes 8, 9 and 10)*

14. COMMENTS/RECOMMENDATION: *(enter justification, course of action, tests conducted, affected systems, ECD (if known))*

15. DATE ANSWER REQUESTED BY: *(MMDDYYYY enter the month, day and year that an answer to the DFS request is required by. For a Notification of a CO Approved DFS leave blank, no date is required)*

16. SUBMITTING ACTIVITY: *(enter the name of the activity submitting the departure)*

17. NEW JCN: *(enter the JCN that will be used to correct the non-compliance or discrepant condition)*

18. CO APPROVED DFS: *(enter either YES (if this is a Notification of a CO Approved DFS) or leave blank)*

APPENDIX B

DEPARTURE FROM SPECIFICATION CLEARANCE/CANCELLATION REPORT MESSAGE FORMAT

RTTUZYUW RUCBSRF0001 DDHHMM-UUUU--RUCBSUU.
ZNR UUUUU
R DDHHMMZ MMM YY ZYB
FM (COMMAND REQUESTING DFS CLEARANCE/CANCELLATION)
TO ISIC/TYCOM//(NOTE 1)
INFO COMNAVSEASYSCOM WASHINGTON DC//(NOTE 2)
ISIC//
COGNIZANT IMA//
SHIP//
SUBMEPP PORTSMOUTH NH//(URO PROGRAM MANAGER)//(NOTE 3)
PEO CARRIERS//PMS312// (AS APPLICABLE FOR CARRIERS)//
PEO THEATER SURFACE COMBATANTS//PMS400F// (AS APPLICABLE FOR COMBATANTS)//
PEO EXW//PMS470/PMS325// (AS APPLICABLE FOR AUXILIARIES, LITTORALS AND PATROL CRAFT)//
PEO MUW//PMS490// (AS APPLICABLE FOR MINE WARFARE)//
NAVSPECWARCOM/N84// (WHEN DDS IS INSTALLED)//
BT
UNCLAS (OR CLAS)//N04855//
MSGID/GENADMIN/(REQUESTING COMMAND)/0000/FEB//
SUBJ/MAJOR DFS (TYCOM NUMBER) FOR (COMPONENT/SHORT DESCRIPTION) ON (SHIP AND HULL NUMBER)/DFS NUMBER/(NOTE 4)/(*)//
REF/A/DOC/COMFLTFORCOMINST 4790.3//(NOTE 5)
REF/B/GENADMIN/ORIGINATOR OF DFS/DTG//
REF/C/GENADMIN/ORIGINATOR OF DFS APPROVAL/DTG//
REF/D/GENADMIN/-/DTG// (USE AS APPROPRIATE)
POC//
AMPN/REF A IS THE JOINT FLEET MAINTENANCE MANUAL//(NOTE 6)
RMKS/ 1. PER REF A REQUEST THE FOLLOWING DFS BE CLEARED FOR USS <SHIP NAME/HULL NO>:

DFS NO.	DESCRIPTION	JUSTIFICATION
766-012-02	DSW-5	DEEP DIVE SAT
766-013-02	STBD IMPULSE TK	DEEP DIVE SAT

2. CLEAR(CANCEL) SUBJECT DFS. REFS A, B, C AND D REFER.//
DECL: ODAR//
BT

NOTE: ENSURE MESSAGES ARE IN ACCORDANCE WITH NTP-3 FORMAT AND CURRENT PLAD IS UTILIZED.

NOTES

1. Office codes for TYCOMs are: COMNAVAIRLANT N43/N9; COMNAVAIRPAC N43; COMNAVSURFLANT N434; COMNAVSURFPAC N434; COMNAVSURFLANT/AIRLANT SNPMTT N02NB; COMNAVSURFPAC N434 AND COMNAVAIRPAC N9/N432N; PACIFIC FLEET CVNs - COMNAVAIRPAC N9/N432N/N432; COMNAVSURFLANT N434 AND COMNAVAIRLANT N9/N43; ATLANTIC FLEET CVNs - COMNAVAIRLANT N9/N43; COMSUBLANT N4322; COMSUBPAC N4, N4322.

2. Office codes for NAVSEA are: SEA 07TC (All SSN and SSBN/SSGN); PMS 399 (DEEPSUBM and DDS); OOC (DDS and DLSS). For URO related DFS, also include the appropriate NAVSEA codes listed in the URO MRC. Include the NAVSEA 07T for informational purposes on all Fly-By-Wire Ship Control System (FBW SCS) DFS messages.

3. Include SUBMEPP only on URO related DFS.

4. Subject line should be identical to subject line of TYCOM approval message.

5. Year/Month/Day.

6. Enter date of most current revision.

(*) Comply with current annotation/declassification requirements for classified messages.

VOLUME V

PART I

CHAPTER 9

AUDITS, SURVEILLANCE, EVALUATIONS AND ASSESSMENTS

REFERENCES.

(a) NAVSEA ST700-AM-GYD-010 - Metrology and Calibration (METCAL) Laboratory Requirements and Certification Guide
(b) NAVAIR 17-35QAL-15 - Naval Aircraft Carrier (METCAL) Program Manual
(c) OPNAVINST 3120.33 - Submarine Extended Operating Cycle (SEOC) Program
(d) NAVSEA T9044-AD-MAN-010 - Requirements Manual for Submarine Fly-By-Wire Ship Control Systems

LISTING OF APPENDICES.

A Vertical Audits
B Horizontal Audits
C Surveillances
D Quality Assurance Audit/Assessments/Surveillance Discrepancy Form

9.1 PURPOSE. Provide requirements, procedures, and criteria for audits, surveillance, evaluations and assessments of the Fleet Quality Assurance (QA) Program.

9.2 GENERAL. Command evaluation is necessary in order to ensure that positive and effective corrective actions are determined and taken in any deficient areas. Audit, surveillance, evaluation and assessment programs are objective and constructive evaluations of the quality, effectiveness and efficiency with which repairs are being accomplished. The purpose of these programs is to determine the activity's compliance with established directives and to serve as tools to reduce rework, improve efficiency and produce permanent improvement in operational readiness. The internal audit and surveillance program must be flexible and dynamic. Specific grooming, concentrating on any recent problems, should be done on a regular basis to increase the benefit of the audit or surveillance. Infrequent repair efforts, components which have repetitive failures, first time repair efforts or time critical work are excellent examples of the types of jobs where extra monitoring could prove most beneficial. Guides used should lend themselves to evaluate recent command or division issues. Involvement of the highest levels of the command is essential to a highly effective program. QA form 14 can be a valuable tool to accomplish the tracking of corrective actions.

9.2.1 Audits. Audits are an internal systematic comparison of records and requirements to ensure compliance with technical and administrative requirements. Different types of audits may be performed depending on the area to be audited and the purpose of the audit. The audit categories are as follows:

a. Vertical Audit. These audits review all aspects of one repair/maintenance action. They track the system/component task from start to finish. This is done by verifying all aspects of the technical, material, process and documentation requirements associated with the work. These audits include attributes covering the entire spectrum of the task (e.g., training and qualification of personnel, technical and production requirements, cleanliness, material control). Appendix A provides guidelines for the preparation and conduct of vertical audits.

b. Horizontal Audit. These audits are conducted on only one specific area or aspect of the QA program (e.g., Re-Entry Control (REC), welding, training, qualification, and testing). They focus on the particular area and do not track a job from start to finish. Appendix B provides guidelines for preparation and conduct of horizontal audits.

9.2.2 Surveillance. Surveillance involves observation of actual work in progress or specific areas of concern. Appendix C provides general guidance for the preparation and conduct of a surveillance.

9.2.3 Evaluation. Evaluations provide the Commanding Officer with an internal review of the overall adequacy and effectiveness of the QA program.

9.2.4 Assessments. Assessments are an external programmatic review of processes to ensure compliance with parent directives. Assessments are normally conducted by the Command's Immediate Superior In Command (ISIC) with participation of other commands, as determined by the ISIC.

9.2.5 Key Elements. Fleet Activities will use, as a minimum, the following key elements to assure the effectiveness of their audit/surveillance program.

a. Conduct training on techniques for preparation, execution and the evaluation of findings prior to conducting an audit or surveillance for the first time.

b. Development and use of attribute sheets/guides. These should be based on key attributes from the source documents and are not meant to limit the scope of the review.

c. Selective use of QA form 14. QA form 14 is an effective tool to document and track those deficiencies that require further investigation and programmatic evaluation. Deficiencies that are minor in nature, or that do not indicate a weak area in the ship's/Fleet Maintenance Activity's (FMA) QA program, should be documented in the audit or surveillance conducted along with corrective action taken.

NOTE: CORRECTION OF SOME DEFICIENCIES ASSOCIATED WITH THE AUDITS OF RECORDS FOR CONTROLLED WORK MAY RESULT IN REWORK.

d. Develop a thorough review process focusing on audit/surveillance deficiencies to identify adverse trends and recurring deficiencies.

9.2.6 Record Retention. The retention of records for audits and surveillance will be in accordance with Part I, Chapter 10 of this volume.

9.3 RESPONSIBILITIES AND PROCEDURES.

9.3.1 Ship's Force Audits, Surveillance and Evaluation Program.

a. Ship's Force personnel will conduct internal QA Audit and Surveillance as scheduled by the Quality Assurance Officer (QAO) as part of the ship's overall monitoring program. This program should focus on in-process controlled work and shall use the guidance of Appendices A, B and C. QA form 14 should be used to document and track those deficiencies that require further investigation and programmatic evaluation. Minor deficiencies, or deficiencies that do not indicate a weak area in the Ships' QA program, should be documented in the audit or surveillance conducted along with root cause, temporary and permanent corrective action taken.

b. Ship's Force will schedule and conduct the following audits:

(1) Annual audits to be conducted:

(a) Material control.

(b) QA Audit and Surveillance program.

(c) QA and welder training and qualification program.

(d) QA records and record retention.

(e) Departure from Specification (DFS).

(f) Cleanliness controls to include:

1 Training and qualification.

2 Local directives.

(g) Technical documentation availability and controls.

(h) Shipboard calibration facilities.

(i) (Submarines only) Submarine Safety (SUBSAFE)/REC, Fly-By-Wire (FBW) and Scope of Certification (SOC) program compliance.

(j) (Submarines only) Unrestricted Operation (URO) Maintenance Requirement Card (MRC) Program.

(2) Perform a closeout audit.

(a) Perform a closeout vertical audit of all CWPs on a quarterly basis, except RECs, when not in a Chief of Naval Operations availability.

(b) Perform a post closeout audit of all RECs within 60 days following availability completion or within 60 days of work completion if work was not accomplished in availability.

(3) Written audit guides shall be used for each audit. The QAO will develop audit guides for all audits. The audit guides should be tailored and customized for the specific organization or area being audited. One successful technique is to acquire a collection of audit findings from previous audits or other ships and incorporate these into the audit guides.

(4) All audits should be conducted on an annual basis unless a shorter period is specified. Those areas identified as weak should be audited more frequently. The periodicity of these audits shall be adjusted by the QAO based upon the results of previous audits/surveillance.

(5) Maintain an auditable record of the most current Job Control Number to DFS verification.

c. Administer an aggressive QA surveillance program to ensure compliance with all QA requirements and to support work process improvements. The surveillance program must include the following elements:

(1) Surveillance of in-process work of all types.

(2) Surveillance of shipboard calibration facilities.

d. Report results of all audits and Surveillances to the Commanding Officer with copies to the Executive Officer and cognizant Department Head/Division Officer.

e. Annually the ship's QAO will evaluate the effectiveness of the QA Audit and Surveillance program. This reviews the results of the internal Audit and Surveillance program to identify trends or areas requiring additional monitoring. It should also review external inspections/monitoring deficiencies to determine if immediate and permanent corrective actions have been effective or if additional surveillance is required in a specific area.

9.3.2 Fleet Maintenance Activity Audit, Surveillance and Evaluation Program.

a. FMAs will schedule and conduct the following audits:

(1) Annual audits to be conducted:

(a) Material control.

(b) QA audit and surveillance program.

(c) QA, NDT, and brazer/welder training and qualification.

(d) QA records and record retention.

(e) Cleanliness controls to include:

1 Training and qualification.

2 Local directives.

3 Facilities such as permanent oxygen clean work areas, oxygen clean material storage areas and special clean/cleaning rooms (except for oxygen clean instrument room).

(f) Technical documentation availability and controls.

(g) Test equipment (mechanical, electrical and electronic) control, issue, receipt and maintenance.

(h) Audits of calibration facilities in accordance with references (a) and (b).

(i) (Submarine repairs only) Submarine Safety (SUBSAFE)/REC, SOC and FBW program compliance.

(2) Perform a post closeout audit of all CWPs.

(a) Perform a post closeout audit of all CWPs quarterly except RECs.

(b) Perform a post closeout audit of all RECs within 60 days following availability completion.

(3) Written audit guides shall be used for each audit. The FMA will develop audit guides for all audits. The audit guides should be tailored and customized for the specific organization or area being audited. One successful technique is to acquire a collection of audit findings from other FMAs and incorporate these into the audit guides.

(4) All audits should be conducted on an annual basis unless a shorter period is specified. Those areas identified as weak should be audited more frequently. The periodicity of these audits shall be adjusted by the QAO based upon the results of previous audits/surveillance.

(5) Report results of all audits to the Commanding Officer with copies to the Repair Officer (Planning Officer at TRIDENT Refit Facilities) and cognizant Department Head/Division Officer.

b. Administer an aggressive FMA QA surveillance program to ensure compliance with requirements and to support FMA work process improvements. The surveillance program must include the following elements:

(1) Surveillance of in-process work of all types.

(2) Surveillance of calibration facilities in accordance with references (a) and (b).

c. Evaluations. The FMA QAO will conduct a semi-annual evaluation of the overall adequacy and effectiveness of the FMA's QA program.

(1) This evaluation should include the following areas:

(a) Findings of the annual internal audits.

(b) Results of the FMA's internal surveillance program.

(c) An evaluation of trends identified by the FMA QA audit and surveillance programs. Areas requiring additional monitoring should be identified.

(d) A review of external inspections/monitoring deficiencies (ISIC, Radiological Controls Practices Evaluation and Naval Reactors Representative's Office surveillance) that relate to the FMA QA program or QA records.

(e) The previous semi-annual evaluation to determine the effectiveness of corrective actions.

(f) Review of the last FMA assessment to check for recurring deficiencies and effectiveness of corrective action.

(2) Results of this evaluation will be provided to the Repair Officer, Department Head (Planning Officer at TRIDENT Refit Facilities) and Commanding Officer.

9.3.3 Immediate Superiors in Command Assessments, Audits, and Surveillance.

a. QA Program Assessment.

(1) ISICs shall schedule and conduct a QA Program assessment in conjunction with the Inter-Deployment Training Cycle (or as determined by each Type Commander (TYCOM)) of all assigned ships. This assessment will review the following areas:

(a) Vertical audit of CWPs.

(b) Material control.

(c) DFS.

(d) Surveillance program.

(e) QA training and qualification.

(f) QA records and record retention.

(g) (Submarines only) SUBSAFE/REC, SOC and FBW program.

(h) (Submarines only) URO MRC Program.

(2) (Submarines only) Electronic copies of the assessment reports will be forwarded to the TYCOM. Submission of the assessment may be via email with appropriate cover letter.

(3) (Surface Ships only) Copies of the assessment reports will be forwarded to the TYCOM noting completion of assessment as satisfactory with findings documenting corrective action taken or proposed corrective action or corrective action required to be taken by the TYCOM or higher authority.

b. ISICs will conduct the following additional periodic audits and surveillance:

(1) Conduct periodic monitoring of Ship's Force controlled work and QA program on all assigned ships during maintenance periods.

(a) Perform at least one surveillance during each refit/upkeep/FMA availability.

(b) Conduct monitoring during industrial availabilities.

(2) Conduct monitoring of assigned FMA's QA. This monitoring will include:

(a) Review of work procedures including opening and closing practices.

(b) Monitoring of in progress work both on tended ships and in FMA work centers.

c. (Submarines only) Additional ISIC Requirements.

(1) On completion of a Selected Restricted Availability (SRA), Pre-Inactivation Restricted Availability (PIRA), Major Maintenance Period (MMP), Extended Refit Period (ERP) or Interim Drydocking (IDD), the ISIC will conduct an audit to include the following:

(a) Conduct a 100% audit of CWPs for SUBSAFE work accomplished by Forces Afloat (FMA and Ship's Force).

(b) Conduct an audit of UROs assigned to Forces Afloat (Ship's Force and the FMA) by the Availability Work Package (AWP) and ensure all URO MRCs have been satisfactorily completed and documented within the required periodicity. Verify that all URO MRC items coming due within six months of availability completion are complete or assigned to a follow-on fleet availability. ISICs are not responsible for auditing UROs assigned to the depot in the AWP.

(c) Conduct a review of all outstanding Forces Afloat DFSs.

NOTE: UPON COMPLETION, PROVIDE THE SHIP'S COMMANDING OFFICER AND THE FMA COMMANDING OFFICER A COPY OF THE RESULTS FROM THE REVIEWS CONDUCTED IN ACCORDANCE WITH PARAGRAPH 9.3.4 OF THIS CHAPTER AND IDENTIFY ANY DEFICIENCY THAT MUST BE CORRECTED/RESOLVED PRIOR TO UNDERWAY. REPORT SIGNIFICANT DEFICIENCIES TO THE TYCOM.

(2) For submarines scheduled to and undergoing a Post Shakedown Availability (PSA), Depot Modernization Period (DMP), Engineered Overhaul (EOH), Engineered Refueling Overhaul (ERO), Refueling Overhaul (RFOH) or Regular or Refueling Overhaul (ROH), the following audits will be performed:

(a) Vertical audits of all Forces Afloat (including FMA) CWPs done since commencement of the PSA, DMP, EOH, ERO, RFOH or ROH prior to cold operations and prior to Fast Cruise. CWPs audited for cold operations do not have to be re-audited for Fast Cruise. These audits must be done sufficiently early to avoid impact on the PSA, DMP, ERO, EOH, RFOH or ROH schedule. If deemed necessary by the ISIC or based on the amount of Forces Afloat work, the ISIC may conduct vertical audits prior to other Key Events (e.g., hot operations, criticality, undocking).

(b) Prior to commencement of Fast Cruise for the PSA, DMP, EOH, ERO, RFOH or ROH conduct an audit of the following:

1 Conduct an audit of UROs assigned to Forces Afloat (Ship's Force and the FMA) by the AWP and ensure all URO MRCs have been satisfactorily completed and documented within the required periodicity. Verify that all URO MRC items coming due within six months of availability completion are complete or assigned to a follow-on fleet availability. ISICs are not responsible for auditing UROs assigned to the depot in the AWP.

2 All outstanding Forces Afloat DFS.

3 Verify any non-conformance of a temporary nature has been correctly resolved per Part I, Chapter 8 of this volume.

(3) The ISIC will perform a Submarine Operating Cycle Extension Assessment of each submarine in accordance with reference (c) when required by TYCOM.

(4) Conduct a 100% audit if Upgrades/Alterations or Major Repair Work of the FBW system were performed. Use the FBW message reporting process for certification specified in Volume II, Part I, Chapter 3 of this manual for availabilities of less than six months duration.

9.3.4 Type Commander Assessments. TYCOM QA Assessments of ISICs, where applicable, and submarine maintenance FMAs will be conducted annually, not to exceed 18 months. Assessments by TYCOMs will be accomplished concurrently with FMA assessments, explained in Volume IV, Chapter 2 of this manual, when scheduled in the same calendar year. Assessments will include review of the following areas:

a. Level I, Submarine Flight Critical Components per reference (d) and nuclear work (i.e., CWPs).

b. Material identification and control including procurement, receipt inspection, marking, storage, issuing, and in-process use.

c. Qualification and training of QA personnel.

d. Metal fabrication including welding, brazing, NDT, qualification, and processes.

e. DFS program.

f. Cleanliness program.

g. Audit and surveillance program.

h. QA records and record retention.

i. Effectiveness of corrective actions for previous audit findings.

j. (Submarines only) SUBSAFE/REC, SOC and FBW program compliance.

k. (Submarines only) URO MRC program.

9.4 REPORTING AUDIT, SURVEILLANCE AND ASSESSMENT RESULTS AND CORRECTIVE ACTION.

9.4.1 Reporting Requirements for External Audits, Surveillances and Assessments. Each Audit, Assessment and Surveillance Report finding should be a concise statement of the situation, complete to the extent that it will stand on its own as a summary of the condition. It should include the requirement for immediate corrective action where such action is indicated. In the event the finding is not a direct violation of a requirement or the nature of the finding does not warrant specific oversight from the auditing activity, yet it offers room for process improvement, no official response is required. These findings are offered to commands as a tool to improve their processes. Such findings will be clearly identified in the audit report reflecting that no official response is required. A discussion should generally be included to amplify the nature of the finding. If not included in the finding, identify positively what directives were violated. TYCOM/ISIC audit/assessment/surveillance findings will be reported using the format of Appendix D. Each finding will provide space for the corrective action response, which includes a root cause/immediate corrective action/permanent corrective action, and when returned to the originator, provides the complete record of the finding and response. The TYCOM/ISIC cover letter forwarding the QA Audit/Assessment/Surveillance Discrepancy forms (Appendix D) will include a summary of all areas. When repeat findings are noted the effectiveness of the corrective action taken in response to previous audits should be addressed.

a. Ship's Force will provide a report to the ISIC of completed corrective action, proposed corrective action and schedule of accomplishment within 60 days of receipt of the ISIC Official Audit/Assessment/Surveillance Report. Those items determined to require immediate correction should be addressed on a case basis.

b. (Submarines/Submarine Repair Activities) For immediate corrective action items (items that must be corrected prior to certain operations):

(1) (Within the SUBSAFE Boundary) The immediate corrective action must be complete and verified with the ISIC prior to the ship's next underway for submerged operations. All deficiencies which affect certification shall be categorized as “IMMEDIATE CORRECTIVE ACTION”.

(2) (Within the SOC Boundary) The immediate corrective action must be clearly identified as to whether it must be completed prior to manned operations whether in-port or at-sea, or prior to unmanned operations at-sea. This may require discussions with the Program Manager and/or the System Certification Authority (SCA). The corrective action must be complete and verified with the ISIC prior to the operation being conducted that was restricted.

(3) (Within the Level I Boundary) The immediate corrective action must be clearly identified as to what system operation restrictions must be in place prior to the completion of the corrective actions. The corrective action must be complete and verified with the ISIC prior to the operation of the system if restricted or prior to at-sea operations.

(4) (Within the FBW Boundary) The immediate corrective action must be complete and verified with the ISIC prior to the ship's next underway for surfaced or submerged operations. All deficiencies which affect certification shall be categorized as "IMMEDIATE CORRECTIVE ACTION".

c. FMAs will provide a report to TYCOM via ISIC (if applicable) on completed corrective action, assessment of root cause, proposed permanent corrective action, and schedule of accomplishment within 60 days of receipt of the TYCOM QA Audit/Assessment/Surveillance Official Report. Those items determined to need immediate correction should be addressed on a case basis. No official response is required for those items indicated as not requiring a response.

d. Naval Sea Systems Command (NAVSEA) Deep Submergence System/SOC Surveys. Findings for Deep Submergence System/SOC Surveys are reported in accordance with Part III paragraphs 9.3.4.2 or 9.3.6.3 of this volume, as applicable. Survey findings will be formally forwarded to the Sustaining Activity via the operational chain of command and maintenance activity, as applicable. The Sustaining Activity response will be provided to the SCA via the operational chain of command. Survey findings to allow manned operations will be processed as follows:

(1) When action identified by a specific card has been completed, a brief summary of the corrective action shall be written on the card and the card shall be signed by the Command responsible for the corrective action. All applicable Objective Quality Evidence (OQE) documenting the corrective action taken shall be attached to the signed card and forwarded to the SCA via the operational chain of command.

(2) For Category 1A, Category 1B and applicable Category 1C findings affecting manned operations, the corrective action must be completed and verified with the SCA prior to manned operations whether in-port or at-sea, or prior to unmanned operations at-sea, or within 30 days of receipt of the Official NAVSEA Survey Report, which ever is shorter.

(3) For all other findings, the Sustaining Activity will provide a report to NAVSEA, via the ISIC, of completed corrective action, proposed corrective action and schedule of accomplishment within 60 days of receipt of the Official NAVSEA Survey Report.

9.4.2 Correcting Deficiencies in Certified Controlled Work Packages or Objective Quality Evidence Records. Deficiencies identified in Objective Quality Evidence (OQE) of certified (closed) CWPs or OQE records (such as retained for REC exceptions) require action to update or correct the OQE to support continued certification of the system. No changes are permitted to a certified CWP, the certified supporting documents listed on the Maintenance Certification Record/REC or certified OQE record except as noted below. Additional OQE that is generated to clarify the certified documents can include: providing additional administrative information to clarify the OQE documentation, re-performance of the maintenance and/or performance of certification testing. The CWP/OQE record shall be annotated to associate the additional information to the document(s) as follows:

a. A QA form 14 shall be generated for each OQE deficiency identified. Each QA form 14 shall identify the deficiency, root cause and corrective action required or completed. The corrective action taken shall clearly identify the revised OQE attributes such as data, an attached certified QA form, a separate CWP number (to document a rework such as performance of a required test, inspection or assembly process) and/or approved DFS (if applicable).

b. The QA form 14 serial number(s) shall be annotated at the top of the QA form 9 or QA form to clearly indicate a QA form 14 has been generated to revise or update the OQE.

c. Once all required actions are completed to revise or update the OQE, a copy of the completed QA 14 forms and any additional documentation generated shall be attached to the CWP/QA form record such that it is clear that the OQE was revised or updated and certification of the system was restored. The QA form 14 index log shall be updated to indicate the action was completed and the log shall be retained per Part I, Chapter 10 paragraph 10.5.6 of this volume.

APPENDIX A

VERTICAL AUDITS

1. The function of a vertical audit is to determine if a single job has been completed in accordance with the required specifications. It tracks the job from start to finish by using the documentation used to perform and certify the job. The following steps are considered the minimum requirements to conduct an audit:

a. Assemble the documentation for the job being audited.

b. Assemble the references.

c. Assign auditors who are familiar with the job being audited.

d. Develop (if not already existing) attribute sheets to be used during conduct of audit.

e. Assemble previous audit discrepancies, if applicable.

f. Brief auditors on the following:

(1) Purpose of vertical audit.

(2) Common discrepancies from previous audits.

(3) Audit attributes.

g. Conduct audit as follows:

(1) Review procedure against the governing references and/or documentation to ensure they reflect what was supposed to be accomplished, if it was accomplished, and how it was accomplished.

(2) Review all documentation pertaining to OQE to ensure that it actually reflects that the job was done correctly. Additionally, a check for accuracy and completeness of forms is required.

(3) All deficiencies noted, that require investigation or program evaluation to identify root cause and permit effective and permanent corrective action, will be documented on a QA Audit Discrepancy form (Appendix D), or QA form 14, as appropriate, and presented to the activity being audited.

2. There is no specific formula for the successful completion of a vertical audit other than time and attention to detail. If properly performed, this audit provides an excellent method to assess the effectiveness of the QA program, since it provides small concise snap-shots of several areas of the entire program.

(This Page Intentionally Left Blank)

APPENDIX B

HORIZONTAL AUDITS

1. The function of a horizontal audit is to review one specific area or part of an area to ensure compliance with the governing requirements. It focuses only on the documentation used to certify the area of concern. The following steps should be considered minimum requirements for an audit:

a. Assemble the source documents/references for the area being audited.

b. Assemble the documentation/records of area being audited.

c. Develop (if not already existing) attribute sheets/audit guide to be used during conduct of the audit.

d. Assemble previous audit findings (if available) for area being audited.

e. Assemble and brief auditors on the following:

(1) Purpose of audit.

(2) Audit attributes.

(3) Common discrepancies from previous audits (if available).

f. Conduct audit as follows:

(1) Review area being audited using attribute sheets/audit guide.

(2) Review the organization's implementation and adherence to the source documents.

(3) Review the documentation used to certify that the organization is in compliance with the governing requirements.

(4) Document deficiencies which require investigation or program evaluation to determine root cause and permit effective and permanent corrective action on a QA Audit Discrepancy form (Appendix D), or QA form 14, as appropriate, and present it to the organization being audited.

2. If properly performed this type audit provides an excellent assessment of a specific area within the overall QA program.

(This Page Intentionally Left Blank)

APPENDIX C

SURVEILLANCES

1. Surveillance programs provide an excellent method for activities to review in-process work and every day practices to determine if deficient conditions or areas exist. A surveillance is designed to observe in-process work on a particular job.

2. The following steps should be considered minimum requirements for surveillance:

a. Personnel assigned to conduct a surveillance must be knowledgeable and trained in how to conduct surveillance.

b. Personnel assigned to conduct a specific surveillance must be knowledgeable in the area to be monitored.

c. Once assigned, the individual should prepare for the surveillance as follows:

(1) Assemble the reference material for the surveillance (e.g., Technical Work Document, Formal Work Package, Planned Maintenance System MRC, URO MRC and process instruction).

(2) Review reference material. This review may indicate other documentation that must be reviewed. This review should concentrate on the specific steps or portions of the procedure, which will be monitored during the surveillance.

(3) Based on the review, attribute checklists may be developed and used, which are tailored to the area to be monitored.

(4) Individual assigned must stay abreast of the job progress to ensure that the surveillance is conducted as required to observe the critical aspects. It serves no purpose to conduct the surveillance, if the job has progressed to a point of insignificant importance (e.g., surveillance of a valve repair after valve is repaired and being reassembled).

d. Once all preparations are complete, the surveillance should proceed as follows:

(1) Upon arrival at the job site, inform individuals performing the job that a surveillance is being conducted.

(2) Position yourself so the job can be monitored but not to interfere with individual(s) performing the work.

(3) Ensure that all key elements/attributes are observed. The focus must be on technical requirements and adherence to it. In those instances where a safety issue, incorrect assembly, or violation of a technical requirement critical to the job is noted, identify this to the individuals performing the job and request they stop until the problem can be resolved.

(4) Look beyond the items on the checklist, if used, for evidence that work is being done correctly.

(5) Once the surveillance is completed, inform the individuals performing the job of any violations or comments noted during the surveillance. Findings will also be discussed with appropriate supervisor.

(6) Write up surveillance findings and provide them to the QAO with copy to the division officer in charge of the work surveyed.

e. It is important that personnel involved in the surveillance program understand that they must focus their efforts towards improvement of the program by being objective and thorough when performing a surveillance. Identification of deficiencies should lead to effective corrective action and an overall improvement in the QA program.

APPENDIX D

QUALITY ASSURANCE AUDIT/ASSESSMENTS/SURVEILLANCE DISCREPANCY FORM

( ) IMMEDIATE CORRECTIVE ACTION REQUIRED

( ) REPEAT FINDING

ITEM:

AREA:

AUDITOR:

DISCUSSED WITH:

REFERENCE:

FINDING:

DISCUSSION:

CORRECTIVE ACTION:

A. ROOT CAUSE:

B. TEMPORARY CORRECTIVE ACTION:

C. PERMANENT CORRECTIVE ACTION:

(This Page Intentionally Left Blank)

VOLUME V

PART I

CHAPTER 10

QUALITY ASSURANCE RECORDS

REFERENCES.

(a) NAVSEAINST 9210.23 - Requirements for Naval Nuclear Work at Naval Activities and Private Shipyards - Certification of Work Accomplishment and Data Retention of Associated Records and Retention of Design Records
(b) SECNAV M-5210.1 - Department of the Navy, Navy Records Management Program, Records Management Manual
(c) NAVSEA T9044-AD-MAN-010 - Requirements Manual for Submarine Fly-By-Wire Ship Control Systems
(d) COMSUBLANT/COMSUBPAC NOTE C3120 - Submarine Operating Restrictions and Depth Authorizations
(e) NAVSEA T9074-AS-GIB-010/271 - Requirements for Nondestructive Testing Methods
(f) NAVSEAINST 9210.39 - Submarine Nuclear Propulsion Plant Operator Welders: Procedures for Maintenance of Qualification
(g) NAVSEA 0948-LP-045-7010 - Material Control Standard
(h) NAVSEAINST 9210.45 - Reactor Plant Welding and Nondestructive Testing Personnel

10.1 PURPOSE. Provide record keeping and retention requirements for the Quality Assurance (QA) records used by the Fleet.

10.2 GENERAL. QA records provide the only lasting records and Objective Quality Evidence (OQE) that repairs and alterations performed on ships of the fleet were accomplished and subsequently tested in accordance with applicable specifications. The accuracy of these records will be beyond reproach and the record for each job will be complete so as to "stand alone", that is, the record will be understood without additional explanation.

10.2.1 Quality Assurance Record Requirements. Record keeping methods are of concern because they affect the apparent validity of a completed record. In order to ensure continued validity of Fleet maintenance records, and to provide the necessary OQE, the following record keeping rules are specified:

a. Record and Certification Signature Block or signature will be legible and in ink. Erasures, write-overs, white outs, ditto marks, continuation arrows, signature stamps, etc., are not acceptable.

b. Neatness and readability of the original record is paramount. Copying records to "make them neat" is prohibited.

c. When an error is made, it will be corrected by drawing a single line through the error, recording the correct entry, initialing, dating and printing the name of the person making the correction.

d. When a questionable item is recognized and is subsequently justified or accepted, remarks explaining the decision will be added or appended as appropriate.

e. QA records pertaining to certification of nuclear work will be kept in accordance with the requirements of reference (a).

10.2.2 Record Retention in General. The following paragraphs summarize the general QA records that will be retained by each organizational group and how long they will be retained:

a. Reduced Size Records. Records (except radiographic film) required to be maintained may be reduced in size (such as by microfilming or CD-ROM in .pdf format only). However, the activity (ship or Fleet Maintenance Activity (FMA)) responsible for the record will ensure that the reduced size records are clearly legible, reproducible, and will so certify prior to destroying the original records. The following procedure will be followed for record reduction:

(1) Record reduction shall be in accordance with reference (b).

(2) Compare the reduced size record against the original record to ensure each page of the original record has been reduced. This comparison shall ensure that the front and the associated back of QA forms and tags have been reproduced.

(3) Reproduce two randomly selected pages of the reduced record into paper copy. Verify completeness and legibility of reproduced pages by comparing against the original record.

(4) Person making comparison will sign the logbook or some other permanent record to certify that the reduced size record is complete and legible after being reproduced.

(5) After steps (1) through (4) above are satisfactorily completed, the original record may be destroyed.

b. Storage and Disposal.

(1) Nuclear Records.

(a) Records that are required to be retained for the life of the ship by reference (a) require Naval Sea Systems Command Nuclear Propulsion Directorate (NAVSEA 08) approval prior to record disposal.

(b) Records of nuclear controlled work will be retained at the activity (ship or FMA) for at least three years following completion of the work in accordance with reference (a). They may then be transferred to a Federal Records Center (FRC) or other designated records repository in accordance with reference (b), after these records are no longer required on board.

(c) Records stored at a FRC. Records stored at FRC will be in accordance with reference (b). Those records stored at a FRC or other designated repository will be appropriately cataloged to allow prompt retrieval if necessary. A copy of the list of records transferred to storage will be sent to the applicable Type Commander (TYCOM). TYCOM will retain these lists until the ship is stricken from Navy rolls. Activities may forward reactor plant work records to FRCs specifying that the records be destroyed 75 years from the date the records are sent to the FRC.

(2) Level I Records.

(a) Non-Nuclear/Non-Submarine Safety (SUBSAFE) Level I Records will be maintained for a minimum of seven years from the ship's delivery date for new construction or seven years from the availability completion date for repairs, overhauls, conversions, etc. Disposition instructions will be requested from NAVSEA 04XQ via the appropriate TYCOM after that time.

(b) Records of Level I work will be retained at the activity (ship or FMA) for at least three years following the completion of the work. After three years the records may be stored ashore.

(3) Submarine Safety and Submarine Flight Critical Component (SFCC) Records.

(a) SFCC records shall be kept in accordance with reference (c). The re-entry control log, completed Re-Entry Controls Forms (REC/MCR), and supporting documentation for SUBSAFE and SFCC work shall be maintained for the life of the ship.

(b) Records of SUBSAFE and SFCC work will be retained at the activity (ship or FMA) for at least three years following the completion of the work. After three years the records, including completed RECs and supporting documentation, may be stored ashore or at a FRC in an auditable condition.

(c) Records stored at a FRC will be in accordance with reference (b). Those records stored at a FRC or other designated repository will be appropriately cataloged to allow prompt retrieval if necessary. Activities may forward SUBSAFE and SFCC records to FRCs specifying that the records be destroyed 75 years from the date the records are sent to the FRC.

(d) Approval to destroy non-ship-specific completed RECs, REC logs, completed RECs, and supporting documentation must be obtained from NAVSEA 07Q via the appropriate submarine TYCOM.

(4) Scope of Certification (SOC) Records. The REC log, completed RECs, and supporting documentation of work performed by the Sustaining Activity shall be maintained in an auditable condition for the period between major availabilities and between sustaining surveys. When work requiring REC is accomplished by an activity other than the Sustaining Activity, the Sustaining Activity's REC log shall reflect this work and the Sustaining Activity shall maintain a copy of the completed REC form (QA form 9 and QA form 10 when applicable).

10.3 TYPE COMMANDER QUALITY ASSURANCE RECORD RETENTION.

10.3.1 Assessment Record Retention. Retain copy of last assessment of FMAs and Immediate Superiors in Command (ISIC), where applicable, including the report of root causes and corrective action.

10.3.2 Departure from Specification Record Retention.

a. Maintain outstanding Departure from Specification (DFS) File. This file may be maintained on electronic media.

(1) An index that reflects the major DFS unique serial number assigned, date approved, system or component including brief description and status.

(2) A copy of each outstanding major DFS and all applicable correspondence.

b. (Submarines only) A hard or electronic copy of cleared major SUBSAFE/SFCC DFSs with an index will be retained for life of ship.

10.3.3 Material Certification Statement Retention (Submarines only).

a. A hard or electronic copy of the TYCOM and NAVSEA SUBSAFE Material Certification message from new construction, Depot Modernization Period (DMP), Engineered Overhaul (EOH), Engineered Refueling Overhaul (ERO), Refueling Overhaul (RFOH) and Regular or Refueling Overhaul (ROH) will be retained for life of ship.

b. A hard or electronic copy of the Operating Cycle Extension Assessment used as basis for granting TYCOM extension of operating interval or operating cycle will be retained until the ship enters the next Selected Restricted Availability (SRA)/DMP/EOH/ERO/RFOH/ROH for which the TYCOM extension applies.

10.4 IMMEDIATE SUPERIOR IN COMMAND QUALITY ASSURANCE RECORD RETENTION.

10.4.1 Assessment and Surveillance Record Retention.

a. Copy of last ISIC or TYCOM assessment of assigned ships and FMA including report of root causes and corrective action.

b. (Submarines only) Copy of the ISIC monitor surveillance reports of the FMA and assigned ships and the corrective action. Retain the past 18 months of monitor surveillance reports. These records may be kept with the other ISIC monitor program records.

c. (Submarines only) Copy of the last TYCOM assessment of the ISIC and corrective actions.

d. All SUBSAFE and Fly-By-Wire Certification Audit Reports of ships shall be retained for the life of the ship in accordance with paragraph 10.2.2b. of this chapter.

10.4.2 Departure from Specification Record Retention.

a. Outstanding DFS Files.

(1) A hard copy or electronic media index that reflects the DFS unique serial number assigned, TYCOM major DFS number (if assigned), date approved, system or component including brief description and status.

(2) A copy of each outstanding DFS and all applicable correspondence.

b. A hard or electronic copy of cleared DFS with an index will be retained for 24 months.

10.4.3 Material Certification Statement Retention (Submarines only).

a. The SRA/Tiger Team certification statements from industrial activities will be retained until the next SRA/DMP/EOH/ERO/RFOH/ROH of the affected ship.

b. The ISIC request for Sea Trials (Volume II, Part I, Chapter 3, Appendix BK, and if used, Appendix BF of this manual) and the TYCOM message authorizing Sea Trials (Volume II, Part I, Chapter 3, Appendix BD, and if used, Appendix BG of this manual) for CNO availabilities less than 6 months until the next SRA/DMP/EOH/ERO/RFOH/ROH of the affected ship.

c. The most recent FMA end of upkeep statement.

d. The most recent ship generated, prior to underway, certification continuity report will be retained.

e. The audit guide and justification used for any Operating Cycle Extension Assessment of assigned ships will be retained in accordance with paragraph 10.3.3 of this chapter.

10.5 SHIP'S QUALITY ASSURANCE RECORD RETENTION.

10.5.1 Controlled Work Package Log. The Quality Assurance Officer (QAO) will maintain a Controlled Work Package (CWP) log, using the QA form 11, for the life of the ship. Re-copying or consolidation of this log is not to be done.

10.5.2 Completed Controlled Work Packages. All CWPs (retain onboard per paragraph 10.2.2 of this chapter), which includes:

a. Maintenance Certification Record (MCR)/REC (QA forms 9 and 10).

b. References unique to this task (e.g., NAVSEA letters, Liaison Action Requests) will be retained with the CWP unless specifically identified to allow recall, if necessary.

c. All enclosures documenting the OQE (e.g., QA forms and Ready for Issue (RFI) tags (NAVSEA 9210/2 and 9210)) will be retained.

d. FWPs executed as the core of a CWP shall be retained with the CWP. After three years when CWPs are moved ashore or placed in storage, the FWP portion of the CWP may be discarded.

10.5.3 Controlled Material Records. Controlled material records will be maintained with the associated CWP. Those records not associated with a CWP will be maintained on file by the QAO.

a. The Supply Officer will maintain on file the letter of certification from the Supervisor of Shipbuilding, for all lots of Level I/SUBSAFE/SFCC Stock Program material and Nuclear Repair Parts during the new construction period. When the material is issued, a copy of this letter should be attached to the QA form 1.

NOTE: MATERIAL CONTROL RECORDS (E.G., QA FORM 2s) ARE NOT REQUIRED TO BE RETAINED FOR REMOVED AND REINSTALLED NUCLEAR LEVEL I MATERIAL AFTER THE CWP IS CLOSED.

b. The QAO will maintain controlled material records as outlined below. These records should be included in the appropriate CWP to the maximum extent practical. Retain material certification files for all Nuclear Level I, SUBSAFE, SFCC and Level I material installed.

(1) The RFI tags (Part II, Chapter 1, Appendix C, of this volume) for Nuclear Level I items installed.

(2) For any Nuclear Level I items received and installed without a RFI tag retain all OQE used to certify.

(3) All OQE used to upgrade material for non-nuclear "Level" use.

(4) All QA forms 3 for any rejected items accepted for use.

(5) A file of QA forms 1 with certification documentation.

10.5.4 Qualification Records. The QAO will maintain a master list of qualified Work Center Supervisors and Maintenance Planners, Controlled Material Petty Officers (CMPO), Cleanliness Inspectors, Quality Assurance Inspectors (QAI), Quality Assurance Supervisors (QAS), Oxygen Clean Workers and Oxygen Clean Instructors. The records will be retained for the duration the individual is onboard. The file will consist of:

a. Date Personnel Qualification Standard completed. For Oxygen Clean Workers and Oxygen Clean Instructors, the date the required course of instruction is completed.

b. Qualification test results. This includes a copy of the examination cover sheet. In addition, a copy of the examination given with answers shall be available either in electronic medium or hard copy. For Oxygen Clean qualifications, this entry is not required.

c. A copy of the signed Final Qualification Page from the Personnel Qualification Standard.

d. Copy of the signed oral interview sheets for each qualification record.

10.5.5 Departure from Specification Records.

a. Outstanding DFS Files.

(1) An index that reflects the DFS unique serial number assigned, date approved, system or component including brief description, annotation for SUBSAFE and status.

(2) A copy of each outstanding DFS and all applicable correspondence.

b. A copy of cleared DFS with an index will be retained for 24 months.

c. A copy of all DFS approved as permanent repairs, with an index, will be retained until they are reflected in the ship's selected records and drawings or technical variation documents.

10.5.6 Assessments, Evaluations and Audits. The QAO will retain records of assessments, evaluation and surveillance for the past 24 months (unless otherwise stated). The records will consist of:

a. QA form 14 index log that has the item numbers, work center responsible to correct and estimated date corrective action is due.

b. Copy of last higher authority assessment and the corrective action for all items.

c. Results of all Audits and Surveillances of the QA Program, including the root cause, immediate and permanent corrective action. (This may be kept with the rest of the monitor program records).

d. Last annual QA Program evaluation performed.

e. Maintain an auditable record of the most current Job Control Number to DFS verification.

10.5.7 Training. Training records will be retained in accordance with TYCOM instructions.

10.6 ADDITIONAL SUBMARINE/NUCLEAR UNIQUE QUALITY ASSURANCE RECORD RETENTION REQUIREMENTS.

10.6.1 Submarine Safety/Nuclear/Level I/Submarine Flight Critical Component/Scope of Certification/Other Certification. The ship will retain the following records for the life of the ship or as indicated below:

10.6.1.1 Reactor Plant Work Accomplishment Report (Submarines only). A copy of all completed Reactor Plant Work Accomplishment Reports.

10.6.1.2 Submarine Safety Material Certification (Submarines only). Copy of the TYCOM and NAVSEA SUBSAFE Material Certification message from new construction, DMP or overhaul until the ship's current status is reflected in reference (d). When the ship's current status is reflected in the notice, the messages may be destroyed, and the current notice will be retained.

10.6.1.3 End of Fleet Maintenance Availability Certification (Submarines only). Retain the last end of FMA Availability letter from the FMA.

10.6.1.4 Certification Continuity Reports (Submarines only). Retain the last certification continuity report sent by the ship.

10.6.1.5 Industrial Activity Certification Reports (Submarines only). A copy of all industrial activity/shipyard certification letters or messages from all SRA conducted between overhauls. In addition, a copy of the ISIC audit of SUBSAFE work performed by the industrial activity should also be kept. These may be disposed of at the next Extended Refit Period/SRA/DMP/EOH/ERO/RFOH/ROH.

10.6.1.6 Other Certification Reports (Submarines only). A copy of any other correspondence or messages that affect the certification of the ship or hull integrity.

10.6.1.7 Controlled Material (Submarines only). Ship's Force is not required to use a QA form 1 to document receipt inspection of Level I/SUBSAFE/SFCC/SOC material to be immediately installed for a specific maintenance action. A QA form 2 will be used to document receipt inspection of material to be immediately installed.

10.6.1.8 Nuclear Records. Nuclear records will be retained as required by reference (a). Reference (a) defines which nuclear records must be retained and length of retention as well as specifies requirements for retention of existing records. It is not intended to create new records for record retention requirements, if they do not already exist.

10.6.1.9 Nuclear Propulsion Plant Operator Welder Records (Submarines only). The Main Propulsion Assistant will retain the following qualification records in accordance with reference (f), for each welder as long as the welder is qualified onboard.

a. Documentation certifying original weld school completion.

b. QA form 20 for most current proficiency welds and qualification welds (the four most recent test assemblies).

c. Copy of current eye examination report.

10.6.1.10 Re-Entry Control/Maintenance Certification Record Exception Objective Quality Evidence and Other Controlled Assembly Records. Retain a file of the most recent QA form 34 generated for each component or system assembled as a controlled assembly and performed as a REC/MCR exception per Part I, Chapter 5, paragraph 5.10.7, Note 3, Part I, Chapter 2, paragraph 2.2.5, Note 2 and Part III, Chapter 5, paragraph 5.11.6.1.b of this volume. Retain a file of the most recent QA form 34 record generated per Part I, Chapter 7, paragraph 7.4.1.c of this volume for non-controlled systems or components until the system or component testing is completed satisfactory.

10.6.1.11 Scope of Certification (Submarines only). Retain a copy of the NAVSEA and TYCOM, if applicable, Scope of Certification and/or Sustaining Survey Certification letter or message.

10.7 FLEET MAINTENANCE ACTIVITY QUALITY ASSURANCE RECORD RETENTION.

10.7.1 Submarine Safety/Nuclear/Level I/Scope of Certification/Other Certification. The QAO or designated officer will retain material certification (SUBSAFE, Nuclear, Level I, Scope of Certification and CWP category "Other") records for the life of each tended ship.

10.7.2 Reactor Plant Work Accomplishment Report (Submarines only). The Nuclear Repair Officer will retain a legible copy of all FMA generated Reactor Plant Work Accomplishment Reports.

10.7.3 Controlled Work Package Log. The QAO will maintain a CWP log, using the QA form 11, for the life of the ship. Re-copying or consolidation of this log is not to be done.

10.7.4 Completed Controlled Work Packages. All CWPs (retain onboard per paragraph 10.2.2 of this chapter), which includes:

a. MCR/REC (QA forms 9 and 10).

b. References unique to this task (e.g., NAVSEA letters, Liaison Action Requests) will be retained with the CWP unless specifically identified to allow recall, if necessary.

c. All enclosures documenting the OQE (e.g., QA forms and RFI tags (NAVSEA 9210/2 and 9210)) will be retained.

d. FWPs executed as the core of a CWP shall be retained with the CWP. After three years when CWPs are moved ashore or placed in storage, the FWP portion of the CWP may be discarded.

NOTE: MATERIAL CONTROL RECORDS (E.G., QA FORM 2s) ARE NOT REQUIRED TO BE RETAINED FOR REMOVED AND REINSTALLED NUCLEAR LEVEL I MATERIAL AFTER THE CWP IS CLOSED.

10.7.5 Controlled Material Records. Controlled material records will be maintained with the associated CWP. Those records not associated with a CWP will be maintained on file by the QAO. The QAO will maintain controlled material records as outlined below. These records should be included in the appropriate CWP to the maximum extent practical. Retain material certification files for all Nuclear Level I, SUBSAFE, SFCC, Level I and SOC material installed.

a. The RFI tags (Part II, Chapter 1, Appendix C, of this volume) for nuclear Level I items installed.

b. For any Nuclear Level I items received and installed without a RFI tag retain all OQE used to certify the material for installation.

c. All OQE used to upgrade material for non-nuclear "Level" use.

d. All QA forms 3 for any rejected items accepted for use.

e. A file of QA forms 1 with certification documentation.

f. All material control records from receipt inspection through installation will be maintained throughout the life of Deep Submergence Systems.

10.7.6 Assessment, Audits, Surveillance and Evaluations. The QAO will retain records for the past 18 months (unless otherwise stated). The records will consist of:

a. Last year and present year internal audit schedule.

b. Completed audit plans/guides and results (Associated QA forms 14 or other discrepancy reports).

c. QA form 14 index log that has the item numbers, work center responsible to correct and estimated date corrective action is due.

d. Copy of last higher authority assessment, surveillance and the corrective action for all items.

e. Schedule and results of internal surveillance of the QA Program, including the corrective action. (This may be kept with the rest of the monitor program records).

f. Last two semi-annual QA Program evaluations.

g. Two years worth of records for calibration laboratory spot checks/sampling of outgoing work.

h. Two years worth of records for Field Calibration Activity spot checks/sampling of outgoing work, as applicable.

10.7.7 End of Fleet Maintenance Activity Certification Report to Tended Submarines (Submarines only). The QAO will retain a copy of the last End of Fleet Maintenance Activity Certification Report to tended submarines issued per Part I, Chapter 5, paragraph 5.10.8.b. or Part III, Chapter 5, paragraph 5.11.7.b of this volume, as applicable.

10.7.8 Nuclear/Submarine Safety/Scope of Certification Work. The master lists of qualified CMPO/Controlled Material Handler, Cleanliness Inspector/Certifier, QAI and QAS (if assigned), will be maintained by name, for the duration the individual is assigned to the repair activity.

NOTE: AT A FMA, CIVILIAN EMPLOYEE CONTINUING TRAINING KNOWLEDGE EXAMINATION QUESTIONS AND ANSWERS WILL BE RETAINED FOR TWO YEARS.

10.7.9 Qualification Record. The QAO will maintain a master list of qualified CMPOs/Controlled Material Handlers, Cleanliness Inspectors, QAIs, QASs, Oxygen Clean Workers and Oxygen Clean Instructors and a qualification file on each CMPO/Controlled Material Handler, Cleanliness Inspector, QAI and QAS. The records will be retained for the duration the individual is onboard. The file will consist of:

a. Date Personnel Qualification Standard completed. For Oxygen Clean Workers and Oxygen Clean Instructors, the date the required course of instruction is completed.

b. Qualification test results. For Oxygen Clean qualifications, this entry is not required.

(This Page Intentionally Left Blank)

VOLUME V

PART I

CHAPTER 11

QUALITY ASSURANCE FORMS AND FORM INSTRUCTIONS

11.1 PURPOSE. Provide Quality Assurance (QA) forms and tags with instructions for preparation and usage.

11.2 LIST OF FORMS. This chapter provides copies of the QA forms and tags discussed throughout this volume.

a.	QA form 1.	-	Material Receipt Control Record.
b.	QA form 2.	-	Material ID/Control Tag.
c.	QA form 3.	-	Controlled Material Reject Tag.
d.	QA form 9.	-	Maintenance Certification Record/Re-Entry Control.
e.	QA form 10.	-	Maintenance Certification Record/Re-Entry Control Supplement Sheet.
f.	QA form 11.	-	Controlled Work Package (CWP)/Re-Entry Control (REC) Log.
g.	QA form 12.	-	Departure From Specification Request.
h.	QA form 12A.	-	Departure Clearance Report.
i.	QA form 14.	-	Surveillance/Monitoring/Audit Discrepancy Record.
j.	QA form 17.	-	Test and Inspection Record.
k.	QA form 17A.	-	Epoxy Repair Record.
l.	QA form 17B.	-	Electroplating Repair Record.
m.	QA form 17C.	-	Component Repair Record.
n.	QA form 17D.	-	Submarine Flight Critical Component (SFCC) Access, Removal and Installation Record.
o.	QA form 17SI.	-	Stud Installation Record.
p.	QA form 17W.	-	Handling Equipment Test Record.
q.	QA form 18.	-	Silver Braze Fabrication and Inspection Record.
r.	QA form 18A.	-	Ultrasonic Inspection Record.
s.	QA form 20.	-	Welding In Process Control/Nondestructive Test Record.
t.	QA form 20A.	-	Radiographic Test Inspection Record.

u.	QA form 20B. (Part A)	-	Structural Primary Record.
v.	QA form 20B. (Part B)	-	Structural Weld History.
w.	QA form 20B. (Part C)	-	Structural Defect Record.
x.	QA form 20C.	-	Pipe, Machinery and Pressure Vessel Weld Record/Weld Defect Repair Sheet.
y.	QA form 26.	-	Hydrostatic/Pneumatic Test Record.
z.	QA form 27.	-	Drop Test Record.
aa.	QA form 28.	-	Shop Test Record.
ab.	QA form 34.	-	Joint/Component Torque and Assembly Record.
ac.	QA form 34A.	-	Joint/Component Assembly Record.
ad.	QA form 35.	-	Thickness Measurement Record.
ae.	MAT-1.	-	Ship to Shop Tag MAT-1 (General Use).

MATERIAL RECEIPT CONTROL RECORD
QA FORM 1 (FRONT)

1. MATERIAL NOMENCLATURE	2. LEVEL OF ESSENTIALITY	3. MIC NO./ID NO.
4. REQUISITION NUMBER (REQ. NO.)	5. JULIAN DATE	6. NUMBER RECEIVED
7. NSN/SMIC	8. VENDOR'S MARKINGS	

9. REQUIRED CERTIFICATION DOCUMENTS FURNISHED (SIGNATURE AND DATE)

[ ] YES [ ] NO

10. ENTER APPROP CODE X – RECORDS REQ'D O – RECORDS NOT REQ'D	MT	PT	RT	UT	VT	CHEM	PHYS	GENERIC MATERIAL IDENTITY CHECK	HARDNESS	DIMEN

11. INSPECTION RESULTS, REMARKS, SIGNATURES AND DATE:

12. DISPOSITION [ ] ACCEPT [ ] REJECT	13. CERTIFIED [ ] SS [ ] L/I [ ] NUC L/I [ ] SOC MCD __ [ ] OTHER
14. DOWNGRADE [ ] GENERAL STOCK [ ] REJECT TO SOURCE	15. SIGNATURE AND DATE

MATERIAL RECEIPT CONTROL RECORD
QA FORM 1 (BACK)

16. MATERIAL NOMENCLATURE:	17. LEVEL OF ESSENTIALITY:	18. MIC NO./ID NO.:
19. REQUISITION NUMBER:	20. NSN/SMIC:	21. ORIGINAL NUMBER RECEIVED:

22. DATE	23A. UIC	23B. WC	23C. JSN	24. SYSTEM	25. CWP#	26. AMT ISSUED	27. AMT REMAINING	28. CMPO/CMH (PRINT NAME)	29. MATERIAL DOWNGRADE	30. NEW LEVEL	31. QAO AUTHORIZATION FOR DOWNGRADE

QA FORM 1 INSTRUCTIONS

MATERIAL RECEIPT CONTROL RECORD

PURPOSE: To document the proper receipt, control, end use and certification of material to the required "Level of Essentiality" for controlled material.

PROCEDURE: The numbered blocks on QA form 1 correspond with the instructions listed below.

NOTE: SHIP'S FORCE IS NOT REQUIRED TO COMPLETE A QA FORM 1 TO DOCUMENT THE RECEIPT INSPECTION OF CONTROLLED MATERIAL IF THE ITEM(S) IS TO BE IMMEDIATELY INSTALLED FOR A SPECIFIC MAINTENANCE ACTION. IN THESE CASES, THE RECEIPT INSPECTION WILL BE CAPTURED ON A QA FORM 2. IF THE MATERIAL IS NOT UTILIZED DURING THE SPECIFIC MAINTENANCE ACTION FOR WHICH IT WAS PROCURED IT SHOULD BE TURNED BACK IN TO SUPPLY. IF THE MATERIAL IS TO BE RETAINED FOR A FUTURE MAINTENANCE ACTION, A QA FORM 1 MUST BE FILLED OUT PRIOR TO PLACING THE MATERIAL IN A CONTROLLED MATERIAL STORAGE LOCKER/AREA.

NOTE: IF THE COMPONENT HAS A SHORTENED MATERIAL IDENTIFICATION AND CONTROL (MIC) MARKING, ENSURE THE FULL MIC MARKING FROM THE SHIPPING DOCUMENTS, TAGS, AND/OR PACKAGING IS ENTERED ON QA FORM 1 AND QA FORM 2.

NOTE: IF PORTIONS OF A COMPONENT WILL BE CANNABALIZED FOR INSTALLATION VICE INSTALLING THE ENTIRE COMPONENT, DISPOSITION IN ACCORDANCE WITH PART I, CHAPTER 6, PARAGRAPH 6.3.9.1.D OF THIS VOLUME.

BLOCK 1 - MATERIAL NOMENCLATURE

Enter the noun name of the material (e.g., 5/8" - 11 NICU studs, 10" O.D. CUNI Barstock).

BLOCK 2 - LEVEL OF ESSENTIALITY

Enter the applicable Level of Essentiality (SUBSAFE, Level I, Nuclear Level I, Submarine Flight Critical Component (SFCC) or Scope of Certification (SOC) Material Control Division (MCD)) for the material received. For assemblies such as valves, the Level of Essentiality will be the Level of Essentiality for the entire assembly, not individual parts.

a. Nuclear Level I:

(1) Material received with a "Target" Ready for Issue (RFI) tag or Naval Sea Systems Command (NAVSEA) Prime Contractor Material determined to be Nuclear Level I.

(2) Material from stock system required to be certified as Nuclear Level I.

b. SUBSAFE:

(1) SS, SB Special Material Identification Code (SMIC) material with valid MIC markings.

(2) Submarine Antenna Engineering Directorate (SAED), (Submarine Antenna Quality Assurance Material) SS, SMIC material.

(3) Open purchased and stock system non-level material required to meet SUBSAFE requirements.

c. Level I:

(1) L/I, C1, S1 or D1 SMIC material with valid MIC markings.

(2) Non-level material required to be upgraded to Level I requirements.

d. SOC MCD A, MCD B or MCD C: The entry will be based on the SOC Level of Essentiality as determined in Part III, Chapter 6 of this volume.

BLOCK 3 - MIC NO./I.D. NO.

NOTE: THE PNSY "TRACE CODE" RESEMBLES A MIC NUMBER BUT DOES NOT INCLUDE THE GENERIC MATERIAL DESIGNATOR (E.G., 98205-003A).

a. Enter the MIC or the identification number/name plate data (I.D. No. if no MIC No.) etched on the major part of the assembled material received (some individual parts may also have MIC numbers that need not be recorded). Fleet Maintenance Activity (FMA) will enter MIC upon completion of upgrading for FMA certified/upgraded material. Ships (Non-FMA) will enter the FMA MIC No. for material that the FMA certifies for the ship. For rotatable items enter the appropriate rotatable pool serial number (e.g., rp-148a, tin-292-11893, etc.).

b. For fasteners enter either the MIC number (when MIC number is marked on the fastener or the individual tag for some small fasteners) or the color code and the PNSY "trace code" provided on the shipper and the package/box.

c. If the material is MCD B, enter Markings on the material or documented on the shipping papers providing identification to material type or military specification.

BLOCK 4 - REQUISITION NUMBER (REQ. NO.)

Enter the Requisition No. (invoice number) that was used to order the material or appears on shipping documents (if provided).

BLOCK 5 - JULIAN DATE

Enter the five digit Julian Date (e.g., 90121, 91200, 92030) the material is received.

BLOCK 6 - NUMBER RECEIVED

Enter the total number received (must agree with the invoice). If the material is, for example, "Barstock" enter the number of pieces and total length. Only one QA form 1 is required if the entire lot has the same MIC number and is receipt inspected on the same day.

BLOCK 7 - NSN/SMIC

Enter the National Stock Number (NSN), including the SMIC, of material received. If material is identified only by drawing and piece number, enter them.

BLOCK 8 - VENDOR'S MARKINGS

a. Enter any Vendor's Marking (heat, lot) present on the material.

b. For fasteners, enter the heat/lot number, material type, and manufacturer's symbol (for nuts containing a self-locking insert, the color of the insert is the manufacturer's symbol).

BLOCK 9 - REQUIRED CERTIFICATION DOCUMENTS FURNISHED (SIGNATURE AND DATE)

a. If required certification documentation is provided, and the item passes receipt inspection in accordance with Chapter 6, enter an "X" in the "YES" block. Controlled Material Petty Officer (CMPO)/Controlled Material Handler (CMH) print name, sign and date the block to certify the item passed receipt inspection. Blocks 10 through 15 are left blank. Attach a QA form 2. A copy of any certification documentation will be attached to the QA form 1.

b. If the certification documentation is unacceptable or the material fails receipt inspection or the item is non-level material undergoing upgrading, enter an "X" in the "NO" block, attach a QA form 3 to the item, and notify the Quality Assurance Officer (QAO)/Quality Assurance Supervisor (QAS). CMPO/CMH print name, sign and date the block.

BLOCK 10 - ENTER APPROPRIATE CODE

QAO/QAS will mark the applicable blocks signifying attributes that must be verified for receipt inspection, by referring to the appropriate references, using the appropriate code; "X" (whenever records are required) or "O" (whenever records are not required, e.g., visual inspection).

BLOCK 11 - INSPECTION RESULTS, REMARKS, SIGNATURE AND DATE

a. CMPO/Quality Assurance Inspector (QAI)/QAS will enter the results of all inspections and, if unsatisfactory, state the reason for failure.

b. Print name, sign and date all entries which certifies the above inspections, issues, and records.

NOTE: BLOCKS 12, 13 AND 14 ARE COMPLETED AS REQUIRED, INCOMPLETE BLOCKS ARE LEFT BLANK.

BLOCK 12 - DISPOSITION

Check the appropriate block based upon inspection results documented in Block 11 and fill out Blocks 13 or 14 as applicable.

BLOCK 13 - CERTIFIED

Check the appropriate block signifying the level of essentiality to which the material has been inspected/certified. For SOC material, enter the applicable MCD designator (A, B or C) in the blank.

NOTE: NON-LEVEL ITEMS UPGRADED OR CERTIFIED WILL HAVE THE ASSIGNED MIC NUMBER ENTERED IN BLOCK 3 ABOVE PRIOR TO SIGNATURE IN BLOCK 15.

BLOCK 14 - DOWNGRADE

Check the appropriate block, if "reject" is checked in Block 12.

BLOCK 15 - SIGNATURE AND DATE

QAO/QAS responsible for Blocks 10-14 will print name, sign and date certifying the record as correct.

BLOCK 16 - Same as Block 1.

BLOCK 17 - Same as Block 2.

BLOCK 18	-	Same as Block 3.
BLOCK 19	-	Same as Block 4.
BLOCK 20	-	Same as Block 7.
BLOCK 21	-	Same as Block 6.
BLOCK 22	-	Enter the date that the material is issued.
BLOCKs 23A, 23B, AND 23C	-	Enter the Unit Identification Code (UIC), Work Center (WC), and the job sequence number that the material is issued against.
BLOCK 24	-	Enter the system that the material is issued for.
BLOCK 25	-	Enter the Controlled Work Package (CWP) serial number that the material is issued for.
BLOCK 26	-	Enter the amount of material issued.
BLOCK 27	-	Enter the amount of material remaining after issue.
BLOCK 28	-	CMPO/CMH issuing material, print name.
BLOCK 29	-	Enter "Yes" or "No" as appropriate.
BLOCK 30	-	Enter Level the material was downgraded to.
BLOCK 31	-	QAO sign, signifying authorization to downgrade material.

NOTE: THE COMPLETED QA FORM 1 WILL BE FORWARDED TO THE QA OFFICE, WHEN THE MATERIAL HAS BEEN ISSUED FOR INSTALLATION.

QA FORM 2

MATERIAL ID/CONTROL TAG
LANTFLT 4790/2 (8-01) S/N 0103-LF-981-0300

MATERIAL IDENTIFICATION
& CONTROL TAG
RECEIPT INSPECTION / REMOVAL

(1) TAG (A) OF (B)

MIC NO/SERIAL NO: (2)

MATL LEVEL ☐ NEW ☐ EXISTING (3)

☐ LI / SS / NUC L/I ☐ SFCC ☐ SOC ☐ OTHER

MATL DESCRIPTION (4)

NSN/SMIC (5)

RECEIPT INSPECTION COMMENTS

(6)

RECEIPT INSPECTION IS SATISFACTORY AND MATERIAL IS ACCEPTABLE FOR USE

CMPO/CMH (7) DATE

UIC	WC	JCN

CWP SER. NO. (8)

QA FORM 2

IN PROCESS CONTROL
ISSUE / FABRICATION / TRANSFER

WC NO. (9) DATE (10)

REMARKS (11)

(12)
CRAFTSMAN/CMPO/CMH/QAI

FABRICATION / TRANSFER

WC NO. (13) DATE (14)

REMARKS (15)

(16)
CRAFTSMAN/CMPO/CMH/QAI

FABRICATION / TRANSFER

WC NO. (13) DATE (14)

REMARKS (15)

(16)
CRAFTSMAN/CMPO/CMH/QAI

INSTALLATION / FABRICATION / TRANSFER

WC NO. (17) DATE (18)

REMARKS (19)

CRAFTSMAN (20)

INSPECTOR (21) DATE

QA FORM 2

(This Page Intentionally Left Blank)

QA FORM 2 INSTRUCTIONS

MATERIAL IDENTIFICATION (ID)/CONTROL TAG
LANTFLT 4790/2 (8-01) S/N 0103-LF-981-0300

PURPOSE:

1. Used for receipt inspection, certification and traceability of new controlled material.

2. Used to maintain traceability and identification of SUBSAFE/Level I, Nuclear Level I, SOC and non-level controlled items removed from a controlled system or component during maintenance including transfer between organizations until reinstalled.

PROCEDURE: The numbered blocks on QA form 2 correspond with the instructions listed below. Two sets of instructions are provided depending on purpose.

PURPOSE 1: RECEIPT OF NEW MATERIAL FROM SUPPLY SYSTEM.
CMPO/CMH WILL COMPLETE BLOCKS 1-7 DURING THE RECEIPT INSPECTION.

NOTE 1: FOR NUCLEAR MATERIAL, ANY RFI OR OTHER CERTIFICATION TAGS ATTACHED TO THE ITEM WILL REMAIN ATTACHED UNTIL THE MATERIAL IS INSTALLED.

NOTE 2: FOR NUCLEAR LEVEL I MATERIAL, ALL SIGNATURES MADE ON QA-FORM 2 (MATERIAL IDENTIFICATION AND CONTROL TAG) ARE CONSIDERED TO BE CERTIFICATION SIGNATURES AS DEFINED IN NAVSEAINST 9210.23 AND ADDENDUM B-1 OF PART 2, CHAPTER 1 OF THIS VOLUME. THE INDIVIDUAL RESPONSIBLE FOR PERFORMING THE CERTIFICATION SHALL BE INDICATED IN EACH SIGNATURE BLOCK ON THE QA FORM 2 AND THAT PERSON SHALL UNDERSTAND HIS/HER SIGNATURE TO INDICATE THE FOLLOWING: *"THE PERSON DESIGNATED TO SIGN FOR AN ACTION VERIFIES, BASED ON PERSONAL OBSERVATION, AND CERTIFIES BY THEIR SIGNATURE THAT THE ACTION HAS ACTUALLY BEEN PERFORMED IN ACCORDANCE WITH THE SPECIFIED REQUIREMENTS."*

NOTE 3: IF PORTIONS OF A COMPONENT WILL BE CANNABALIZED FOR INSTALLATION VICE INSTALLING THE ENTIRE COMPONENT, ATTACH A QA FORM 2 (PURPOSE 1 INSTRUCTIONS) TO THE PORTIONS OF THE COMPONENT OR ASSEMBLY TO BE INSTALLED IN THE SYSTEM. REMOVE THE ORIGINAL QA FORM 2 (DISCARD) AND ATTACH A NEW QA FORM 2 (PURPOSE 1 INSTRUCTIONS) DOCUMENTING THE ACTUAL CONFIGURATION OF THE REMAINING PORTION OF THE ORIGINAL ASSEMBLY. DISPOSITION IN ACCORDANCE WITH PART I, CHAPTER 6, PARAGRAPH 6.3.9.1.D OF THIS VOLUME.

BLOCK 1 - TAG (A) OF (B)

a. Block A – Enter "1". For additional tags used during the fabrication/transfer/installation process, number the tags in sequential order as used (2, 3, 4, etc.).

b. Block B - The last number reflects the total number of tags used for this item during this maintenance action. This block is filled in by the craftsman at the time Block 20 is signed for non-SUBSAFE/non-SOC systems. For SUBSAFE, Nuclear or SOC systems, this block is filled in by the QAI at the time Block 21 is signed on the last tag (e.g., 3 of 3).

BLOCK 2 - MIC NO./SERIAL NO.

NOTE: THE INFORMATION ENTERED FOR FASTENERS MAY NEED TO INCLUDE INFORMATION FROM BLOCKS 3 AND 8 FROM QA-1. DO NOT ENTER THE PNSY TRACE NUMBER FROM BLOCK 3 OF THE QA-1.

a. New Material: Enter the MIC etched on the material. If the component has no MIC or a shortened MIC marking, ensure the full MIC marking from the shipping documents, tags, and/or packaging is entered.

b. Fasteners: Document the markings from the fastener to include either:

(1) The color code and the heat/lot number, material type, and manufacturer's symbol (for nuts containing a self-locking insert, the color of the insert is the manufacturer's symbol).

(2) The MIC number (when MIC number is on the fastener or on the individual tag for some small fasteners).

BLOCK 3 - MAT LEVEL

Check the NEW block and the appropriate block for Level of Essentiality [e.g., check LI/SS/NUC L/I, if Level I or Nuclear Level I, or check SOC, if Scope of Certification, or check "OTHER" (e.g., SAED Controlled)]. This block should be the same as the "Level" on the QA form 1.

BLOCK 4 - MATL DESCRIPTION

Enter the quantity, size and noun name of the material (e.g., (6 each) 5/8" - 11 NICU studs, 10" O.D. CUNI barstock 6" long).

BLOCK 5 - NSN/SMIC

Enter the NSN, including SMIC, of the material. If none, enter "NONE".

BLOCK 6 - RECEIPT INSPECTION COMMENTS

Enter receipt inspection results (i.e., SAT or UNSAT). If inspection results are UNSAT in Block 6, initiate a QA form 3. For UNSAT results in Block 6, the CMPO will only sign Block 7 of the QA form 2 if the QAO dispositions the item suitable for use on Block 12 of the QA form 3. For SAT receipt inspection of SOC MCD Level A or B material, enter the following statement with the blank having the appropriate A or B entered:

"Material Receipt Inspected SAT and is certified as SOC MCD ___."

This entry will be signed by the QAO.

BLOCK 7 - CMPO/CMH

CMPO/CMH certifying the entries in Blocks 1-7 print name, enter signature and date.

NOTE 1: THE CMPO WILL VERIFY THAT THE ITEM IS WHAT IS REQUIRED FOR INTENDED USE PRIOR TO TURNING THE MATERIAL OVER TO CRAFTSMAN FOR FABRICATION AND/OR INSTALLATION AND FILL IN BLOCKS 8 THROUGH 12 AT THE TIME THE MATERIAL IS ISSUED.

NOTE 2: IF A PARTIAL ISSUE IS MADE (E.G., A SECTION OF BARSTOCK IS CUT OFF A LARGER PORTION OR ONLY 4 OF 12 NUTS IN A BOX ARE USED), THE CMPO MAKING THE ISSUE WILL COMPLETE BLOCKS 1-12 OF A NEW QA FORM 2 FOR THE PARTIAL ISSUE IN ACCORDANCE WITH PART I, CHAPTER 6, PARAGRAPH 6.3.9 OF THIS VOLUME AND UPDATE THE ASSOCIATED QA-FORM 1. THE ORIGINAL OR "PARENT" QA-FORM 2 DOCUMENTING ORIGINAL RECEIPT OF MATERIAL WILL NOT BE MODIFIED. THE QA-FORM 1 WILL TRACK DISTRIBUTION OF MATERIAL.

BLOCK 8 - UIC, WC, JSN AND CWP SERIAL NO.

At the time of issue, enter the Job Control Number (JCN) [UIC, WC and Job Sequence Number (JSN)] and CWP serial number.

BLOCK 9 - WC NO.

Enter the number of the WC receiving material (e.g., EM01, 10C, 38A).

BLOCK 10 - DATE

Enter date the WC received the material.

BLOCK 11 - REMARKS

Enter the reason for issue (e.g., issued to 31A for manufacture of fitting, issued to EM01 for installation).

BLOCK 12 - CRAFTSMAN/CMPO/CMH/QAI

For Initial Material Issue: Print name, enter signature signifying issue of material by CMPO/CMH. For Fabrication/Transfer (Additional QA form(s) 2 required). Print name, enter signature signifying receipt of material.

NOTE: THE REMAINING SECTIONS OF THE TAG ARE COMPLETED BY THE COGNIZANT CRAFTSMAN/CMPO/CMH/QAI DURING THE FABRICATION/INSTALLATION PROCESSES.

NOTE: SATISFACTORY CONDITION OF MATERIAL EXCHANGED BETWEEN WCs IS ASSUMED, UNLESS AN ENTRY IS MADE IN REMARKS INDICATING MATERIAL IS REJECTED.

BLOCK 13 - WC NO.

Enter the number of the WC receiving material (e.g., 56A or EA01).

BLOCK 14 - DATE

Enter date material received.

BLOCK 15 - REMARKS

Record work performed while the material was in the custody of the WC (e.g., drilled screws and installed Nylock pellets).

BLOCK 16 - CRAFTSMAN/CMPO/CMH/QAI

Cognizant craftsman print name and sign to certify the above blocks are complete and correct.

NOTE: IF 2 OR MORE WCs ARE INVOLVED IN THE FABRICATION PROCESS, ADDITIONAL QA FORMS 2 WILL BE FILLED OUT AND NUMBERED IN ACCORDANCE WITH THE INSTRUCTIONS ABOVE FOR BLOCK 1.

NOTE: IF FOR ANY REASON THE COGNIZANT CRAFTSMAN REJECTS THE MATERIAL HE/SHE WILL COMPLETE AND ATTACH A MATERIAL REJECT TAG (QA FORM 3) AND LEAVE THE QA FORM 2 ATTACHED.

NOTE: BLOCKS 17 THROUGH 21 WILL CONTAIN THE RECORD OF FINAL INSTALLATION. IF ADDITIONAL TAGS ARE REQUIRED FOR THE MATERIAL DURING THE FABRICATION AND TRANSFER PROCESS (MORE THAN TWO WCs/PROCESSES INVOLVED IN THE REPAIR), BLOCKS 9 THROUGH 12 AND BLOCKS 17 THROUGH 21 MAY BE USED.

BLOCK 17 - WC NO.

Enter the number of the WC responsible for installation of the material (e.g., 56A or EA01).

BLOCK 18 - DATE

Enter the date of installation.

BLOCK 19 - REMARKS

Enter the location where the material was installed into the system or component (e.g., installed in AHP-514, installed in system at joints ASW-70014(F) and ASW-70015(F), etc.).

BLOCK 20 - CRAFTSMAN

Cognizant craftsman print name and enter signature signifying that the material is the correct material, is installed correctly and in accordance with the applicable technical specifications. Remove the QA form 2 and file with the CWP if a QAI is not required.

NOTE: A QAI INSPECTION IS REQUIRED FOR NEW MATERIAL INSTALLATIONS FOR JOINTS AND ASSEMBLIES WITHIN THE HULL INTEGRITY BOUNDARY (INCLUDING ELECTRICAL HULL FITTING (EHF) TO PRESSURE HULL JOINTS), SOC JOINTS AND COMPONENTS, SUBSAFE SEAWATER/SEA-CONNECTED FLANGED PIPE JOINTS, AND ALL NUCLEAR LEVEL I SYSTEM JOINTS AND COMPONENTS.

BLOCK 21 - INSPECTOR

When required, inspector print name and enter signature and date certifying that the material is the correct material, acceptable for application and correctly installed. Enter NA in QAI signature space when QAI is not required. Remove the QA form 2 and file with the CWP.

NOTE: IF, FOR ANY REASON, A CRAFTSMAN/CMPO/CMH/QAI REJECTS MATERIAL, THEY WILL COMPLETE AND ATTACH A QA FORM 3, LEAVING THE QA FORM 2 ATTACHED. TAG USED ITEMS WHICH MUST BE TURNED IN TO SUPPLY AND ANY ITEM WHICH IS NOT PROPERLY DISCARDED (E.G., AT THE END OF WORK DAY OR SHIFT).

NOTE: WHEN EXISTING CONTROLLED MATERIAL IS REINSTALLED INTO THE SYSTEM, THE QA FORM 2 WILL BE COMPLETED AND RETAINED WITH THE CWP UNTIL THE CWP IS CLOSED OUT. THE ACCOUNTABILITY FOR CONTROLLED MATERIAL REINSTALLATION IS ON THE APPLICABLE OBJECTIVE QUALITY EVIDENCE (OQE) RECORD (E.G., JOINT/COMPONENT REPAIR RECORD, QA FORM 34). THE QA FORM 2 MAY BE DISCARDED AFTER THE CWP IS CLOSED OUT.

PURPOSE 2: UPON REMOVAL FROM SYSTEM OR COMPONENT (EXISTING MATERIAL).

NOTE 1: FOR NUCLEAR LEVEL I MATERIAL, ALL SIGNATURES MADE ON QA-FORM 2 (MATERIAL IDENTIFICATION AND CONTROL TAG) ARE CONSIDERED TO BE CERTIFICATION SIGNATURES AS DEFINED IN NAVSEAINST 9210.23 AND ADDENDUM B-1 OF PART 2, CHAPTER 1 OF THIS VOLUME. THE INDIVIDUAL RESPONSIBLE FOR PERFORMING THE CERTIFICATION SHALL BE INDICATED IN EACH SIGNATURE BLOCK ON THE QA FORM 2

AND THAT PERSON SHALL UNDERSTAND HIS/HER SIGNATURE TO INDICATE THE FOLLOWING: *"THE PERSON DESIGNATED TO SIGN FOR AN ACTION VERIFIES, BASED ON PERSONAL OBSERVATION, AND CERTIFIES BY THEIR SIGNATURE THAT THE ACTION HAS ACTUALLY BEEN PERFORMED IN ACCORDANCE WITH THE SPECIFIED REQUIREMENTS."*

NOTE 2: DAMAGED EXISTING MATERIAL REMOVED FROM CONTROLLED SYSTEMS WHICH IS NOT INTENDED TO BE REPAIRED OR REUSED AND IS INTENDED TO BE DISPOSED OF AS TRASH DOES NOT REQUIRE A QA FORM 2 TO BE ATTACHED PROVIDED THE MATERIAL IS IMMEDIATELY DISCARDED. EXAMPLES OF THIS ARE DAMAGED VALVE STEMS, DAMAGED COMPONENT FASTENER NUTS AND STUDS. DOES NOT APPLY TO TURN-IN ITEMS SUCH AS DEPOT LEVEL REPAIRABLE.

BLOCK 1 - TAG (A) OF (B)

a. Number the tags in sequential order as used (e.g., 1, 2, 3, etc.).

b. The last number reflects the total number of tags written for each part removed from a disassembled component or system. This block is filled in by the craftsman at the same time Block 20 is signed for final installation of non-SUBSAFE/non-SOC systems. For SUBSAFE, Nuclear or SOC systems, the QAI will fill in this block at the time Block 21 is signed on the last tag (e.g., 3 of 3).

BLOCK 2 - MIC NO./SERIAL NO.

Enter the MIC etched on the material. If none, enter "NONE". For fasteners enter either the MIC number (when MIC number is marked on the fastener) or the material marking, color code, heat/lot number, and manufacturer's symbol (for nuts containing a self-locking insert, the color of the insert is the manufacturer's symbol). For rotatable items enter the appropriate rotatable pool serial number (e.g., rp-148a, tin-292-11893, etc.).

BLOCK 3 - MAT LEVEL

Check the EXISTING block.

BLOCK 4 - MATL DESCRIPTION

Enter the quantity, size and noun name of the material (e.g., 6 each, 5/8" - 11 NICU studs, AHP-56 4500/2000 PSI Reducer).

BLOCK 5 - NSN/SMIC

Enter "NA".

BLOCK 6 - RECEIPT INSPECTION COMMENTS

Enter "NA".

BLOCK 7 - CMPO/CMH

Enter "NA".

BLOCK 8 - UIC, WC, JCN AND CWP SERIAL NO.

Enter the JCN, consisting of the UIC, WC, JSN, and CWP serial number in the appropriate blocks.

NOTE: CAUTION MUST BE TAKEN WHEN USING THE WORDS "REPAIRED", "REINSTALLED" TO ENSURE THAT THESE WORDS ARE USED PROPERLY.

TAG BACK SIDE

(This side is filled out by the QAI, CMPO, CMH or craftsman).

BLOCK 9 - WC NO.

Enter the number of the WC which completed Blocks 1-8 of the tag (e.g., 56X, EA01).

BLOCK 10 - DATE

Enter date material removed from system or component.

BLOCK 11 - REMARKS

Enter information regarding why component was removed (e.g., removed for repair of valve seats, removed for transfer to AS-40 for repair and testing).

BLOCK 12 - CRAFTSMAN/CMPO/CMH/QAI

The cognizant craftsman will print name and sign.

NOTE: IF MORE THAN ONE WC IS INVOLVED IN THE FABRICATION/REPAIR PROCEDURE, BLOCKS 13-16 WILL BE FILLED OUT BY THE COGNIZANT CRAFTSMAN IN THE SAME MANNER AS BLOCKS 9 THROUGH 12 AS THE ITEM IS TRANSFERRED FROM ONE WC TO ANOTHER FOR FABRICATION, ETC. FOR A TOTAL SHIP'S FORCE JOB, THESE BLOCKS ARE NORMALLY "NA", UNLESS ANOTHER WC HAS TO DO SOMETHING TO THE MATERIAL.

If used for transfer of material between organizations, Blocks 13-16 will be filled out by the receiving activity as follows:

BLOCK 13 - WC NO.

Enter the number of the WC receiving material (e.g., 56A, 38C).

BLOCK 14 - DATE

Enter date material received.

BLOCK 15 - REMARKS

Record work performed while in the custody of the WC.

BLOCK 16 - CRAFTSMAN/CMPO/CMH/QAI

Cognizant individual will print name and sign that all work performed was completed satisfactorily and in accordance with applicable technical requirements. This signature will be made prior to transferring the material back to the original organization from which it was received.

NOTE: BLOCKS 17 THROUGH 21 WILL CONTAIN THE RECORD OF FINAL INSTALLATION. IF ADDITIONAL TAGS ARE REQUIRED FOR THE MATERIAL DURING THE FABRICATION AND TRANSFER PROCESS (MORE THAN TWO WCs/PROCESSES INVOLVED IN THE REPAIR), BLOCKS 9 THROUGH 12 AND BLOCKS 17 THROUGH 21 MAY BE USED.

BLOCK 17 - WC NO.

Enter WC responsible for installation.

BLOCK 18 - DATE

Enter date of final installation.

BLOCK 19 - REMARKS

Enter the location where the material was installed into the system or component (e.g., installed in AHP-514, installed in system at joints ASW-70014(F) and ASW-70015(F), etc.).

BLOCK 20 - CRAFTSMAN

Cognizant craftsman print name and enter signature signifying that the material is installed correctly and in accordance with applicable technical specifications. Remove the QA form 2 and file with the CWP.

NOTE: QAI VERIFICATION IS REQUIRED FOR NUCLEAR LEVEL I PRESSURE BOUNDARY JOINTS OR WHEN TRANSFERRED/CANNIBALIZED MATERIAL IS INSTALLED WITHIN THE SUBSAFE OR SOC BOUNDARY.

BLOCK 21 - INSPECTOR

When required, inspector print name, and enter signature and date certifying that the material is the correct material, acceptable for application and correctly installed. Remove the QA form 2 and file with the CWP.

NOTE: IF, FOR ANY REASON, A CRAFTSMAN/CMPO/CMH/QAI REJECTS MATERIAL THEY WILL COMPLETE AND ATTACH A QA FORM 3, LEAVING THE QA FORM 2 ATTACHED. TAG USED ITEMS WHICH MUST BE TURNED IN TO SUPPLY AND ANY ITEM WHICH IS NOT PROMPTLY DISCARDED (E.G., AT THE END OF WORK DAY OR SHIFT).

NOTE: WHEN EXISTING CONTROLLED MATERIAL IS REINSTALLED INTO THE SYSTEM THE QA-2 WILL BE COMPLETED AND RETAINED WITH THE CWP UNTIL THE CWP IS CLOSED OUT. THE ACCOUNTABILITY FOR CONTROLLED MATERIAL REINSTALLATION IS ON THE APPLICABLE OQE RECORD (E.G., JOINT/COMPONENT REPAIR RECORD, QA-34). THE QA-2 MAY BE DISCARDED AFTER THE CWP IS CLOSED OUT.

(This Page Intentionally Left Blank)

QA FORM 3

CONTROLLED MATERIAL REJECT TAG

CONTROLLED MATERIAL REJECT TAG

QA FORM 3

PART I

1. MIC/ID NUMBER

2. ☐ L/I ☐ NUC L/I

☐ MIL-SPEC ☐ OTHER ☐ SS

3. REASON

4. REJECTED BY _____ DATE _____

PART III

FINAL DISPOSITION BY QA

9. ACCEPT AS:

10. DOWNGRADE TO:

11. RETURN TO SOURCE

12. REMARKS

_____

13. QAO APPROVED

PART II

QA DISPOSITION REQUEST

5. MIC NO.

6. LOCATION

7. REASON

_____

8. DIVISION OFFICER DATE

Red tag with black lettering.

(This Page Intentionally Left Blank)

QA FORM 3 INSTRUCTIONS

CONTROLLED MATERIAL REJECT TAG
S/N 0103-LF-655-1300

PURPOSE: This tag provides visual evidence and identification of rejected material or material in a hold status, and a request for QAO evaluation for final disposition.

NOTE: DAMAGED EXISTING MATERIAL REMOVED FROM CONTROLLED SYSTEMS WHICH IS NOT INTENDED TO BE REPAIRED OR REUSED AND IS INTENDED TO BE DISPOSED OF AS TRASH DOES NOT REQUIRE A QA FORM 3 TO BE ATTACHED PROVIDED THE MATERIAL IS IMMEDIATELY DISCARDED. EXAMPLES OF THIS ARE DAMAGED VALVE STEMS, DAMAGED COMPONENT FASTENER NUTS AND STUDS. DOES NOT APPLY TO TURN-IN ITEMS SUCH AS DEPOT LEVEL REPAIRABLE. ALL MIC MARKINGS ON DAMAGED MATERIAL WILL BE REMOVED OR OBSCURED TO PREVENT INADVERTENT REUSE.

PROCEDURE:

a. Part I and Blocks 5 through 7 of Part II are filled out by personnel attaching the tag.

b. Attach filled out tag to the material.

c. Person attaching the tag will remove Part II, and forward to the QAO/QAS via the division officer.

d. The QAO will determine the final disposition and fill out Part III.

e. The numbered blocks on QA form 3 correspond with the instructions listed below.

PART I

BLOCK 1 - MIC/SERIAL NO.

Enter the MIC, serial number or other identifying permanent marking etched on the material, or if the item does not have a MIC number/serial number/other identifying marking visible, enter none or existing, as appropriate. Enter the same in Block 5.

BLOCK 2 - MATL LEVEL

Check the appropriate block indicating the Level of Essentiality for the material or fill in the blank for "other". When "other" is selected, enter in the amplifying remarks why the material is being tagged (e.g., SAED, Controlled or SOC).

BLOCK 3 - REASON

Enter the reason for rejection of the material (be explicit). Example: "Invalid MIC marking", "Linear indications on weld". Provide as much applicable information as possible concerning the item (e.g., rejection form(s) (Departure From Specification (DFS), Quality Deficiency Report, etc.), Drawing No., Piece No., Contract, Stock No., Control Work Procedure (CWP), etc.).

BLOCK 4 - REJECTED BY/DATE

Cognizant individual print name, enter signature and date rejected.

PART II - QA DISPOSITION REQUEST

BLOCK 5 - MIC/SERIAL NO.

Enter the same information that is in Block 1.

BLOCK 6 - LOCATION

Enter exact location of material (e.g., Rejected Material Locker WC 38A).

BLOCK 7 - REASON

Enter the reason why the rejected material should be released (e.g., located Nondestructive Test (NDT) records for material, etc.).

BLOCK 8 - REQUESTED BY

Cognizant division officer print name and enter signature.

NOTE: REMOVE AND FORWARD THE COMPLETED PART II OF THE REJECT FORM TO THE QAO VIA THE DIVISION OFFICER. SHIPS MAY NEED ASSISTANCE FROM THE FMA QAO IN DISPOSITIONING THE MATERIAL.

PART III - FINAL DISPOSITION BY QA

Enter all data used to determine final disposition.

BLOCK 9 - ACCEPT AS

Enter the level of essentiality to which the item is to be accepted (e.g., Non-Level to Level I) A DFS may be required. If this item will not be accepted mark this blank "NA".

BLOCK 10 - DOWNGRADE TO

Enter Level of Essentiality to which the item is to be downgraded. If it is to be returned to source enter "NA" or "None".

BLOCK 11 - RETURN TO SOURCE

If to be returned to source, place an "X" or check in the block.

BLOCK 12 - REMARKS

Enter any remarks needed to explain the disposition of the material or why a particular decision was made. Identify the Objective Quality Evidence (OQE)/technical justification or documentation which authorizes use/disposal of material (e.g., DFS, Liaison Action Record (LAR), waivers, deviations, etc.).

BLOCK 13 - QA OFFICER SIGNATURE AND DATE

QAO who made the disposition decision print name, enter signature and date. The tag shall stay with the material. Upon installation of the material, remove the tag and return to the QAO.

MAINTENANCE CERTIFICATION RECORD/RE-ENTRY CONTROL

QA FORM 9

1. PAGE 1 OF

2. [ ] SUBSAFE/RE-ENTRY [ ] NUCLEAR [ ] LEVEL I [ ] SCOPE OF CERTIFICATION [ ] SFCC [ ] OTHER

3. SHIP HULL	4. CWP/REC SERIAL NO. REV.
5. J.O./JCN	6. ASSOCIATED CWP(s)/REC(s)
7. ORIGINATOR BADGE/GRADE/RANK	8. ORGANIZATION
9. SYSTEM REPAIRED/RE-ENTERED	10. REPAIR/RE-ENTRY LOCATION

11. COMPONENT(s)

WORK DESCRIPTION INCLUDING BOUNDARIES

12. JID MAP/DWG WITH REV

13. WORK AND TESTING TO BE PERFORMED AND WORK AND TEST REFERENCE DOCUMENTS

14. APPLICABLE JOINT NO(s), OR IF NOT SUPPLIED. SPECIFIC BOUNDARIES

APPROVAL FOR CONTROLLED WORK/RE-ENTRY

15A. PRIME APPROVAL SIGNATURE LEGIBLY PRINTED, TYPED OR STAMPED NAME & BADGE/GRADE/RANK DATE

15B. PRIME APPROVAL SIGNATURE LEGIBLY PRINTED, TYPED OR STAMPED NAME & BADGE/GRADE/RANK DATE

15C. PRIME APPROVAL SIGNATURE LEGIBLY PRINTED, TYPED OR STAMPED NAME & BADGE/GRADE/RANK DATE

15D. PRIME APPROVAL SIGNATURE LEGIBLY PRINTED, TYPED OR STAMPED NAME & BADGE/GRADE/RANK DATE

VERIFICATION AND CERTIFICATION

16. SUPPORTING DOCUMENTATION

VERIFICATION OF WORK COMPLETION

17. THE PRODUCTION WORK DESCRIBED BY THIS MCR / REC HAS BEEN ACCOMPLISHED IN ACCORDANCE WITH THE SPECIFIED INSTRUCTIONS AND THE REQUIRED DOCUMENTATION LISTED IN BLOCK 16 HAS BEEN COMPLETED, REVIEWED AND IS CORRECT.
APPROVAL SIGNATURE LEGIBLY PRINTED, TYPED OR STAMPED NAME & BADGE/GRADE/RANK DATE

CERTIFICATION OF DOCUMENTATION OF PRODUCTION WORK

18. ALL DOCUMENTATION AND CERTIFICATION FOR PRODUCTION WORK SPECIFIED IN BLOCK 16 HAS BEEN COMPLETED. THE DOCUMENTATION HAS BEEN REVIEWED FOR ACCURACY AND COMPLETENESS.
APPROVAL SIGNATURE LEGIBLY PRINTED, TYPED OR STAMPED NAME & BADGE/GRADE/RANK DATE

CERTIFICATION OF TESTING RESULTS

19. THE TESTING INVOKED FOR THIS MCR HAS BEEN COMPLETED. THE TEST DOCUMENTATION SPECIFIED IN BLOCK 16 HAS BEEN REVIEWED FOR ACCURACY AND COMPLETENESS.
APPROVAL SIGNATURE LEGIBLY PRINTED, TYPED OR STAMPED NAME & BADGE/GRADE/RANK DATE

FINAL MCR CLOSEOUT CERTIFICATION

20. ALL CERTIFICATIONS RELATED TO THIS MCR HAVE BEEN REVIEWED FOR CORRECTNESS AND VERIFIED TO BE COMPLETE. I CERTIFY THIS QA CERTIFICATION/RE-ENTRY IS CLOSED.
PRIME APPROVAL SIGNATURE LEGIBLY PRINTED, TYPED OR STAMPED NAME & BADGE/GRADE/RANK DATE

21. SHIP'S COMMANDING OFFICER SIGNATURE LEGIBLY PRINTED, TYPED OR STAMPED NAME & GRADE/RANK DATE

(This Page Intentionally Left Blank)

QA FORM 9 INSTRUCTIONS

MAINTENANCE CERTIFICATION RECORD/RE-ENTRY CONTROL

PURPOSE:

NOTE: "N/A" ALL UNUSED BLOCKS.

1. This form is used to authorize and certify maintenance within SUBSAFE, Nuclear Level I, Level I or SOC boundaries and is used as a CWP cover sheet.

2. The instructions are broken down into two separate situations.

SITUATION 1. CONTROLLED WORK/SUBSAFE RE-ENTRY CONTROL BY SHIP'S FORCE ONLY.

a. The following instructions contain the minimum information and controls necessary to maintain certified systems on board ship when work is performed by Ship's Force on a certified ship.

b. Each block number on the Maintenance Certification Record (MCR)/Re-Entry Control (REC), QA form 9 corresponds to the same number below. The number identifies the purpose and use of the entry on the MCR/REC.

c. Each block will be filled in/signed by the personnel assigned or their authorized representatives. Such authorized representatives will be designated in writing in an approved ship's instruction.

BLOCK 1 - PAGE 1 OF

Enter the total number of pages (QA form 9 plus any QA form 10 used as a supplement, should normally be 1 of 2).

BLOCK 2 - [ ] SUBSAFE/REC [ ] NUCLEAR [ ] LEVEL I [ ] SCOPE OF CERTIFICATION [ ] SFCC [ ] OTHER

Check or "X" the appropriate block and, if "OTHER" is checked, will enter the appropriate level of control (e.g., P-1, P-3a, P-LT).

BLOCK 3 - SHIP HULL NO.

Enter ship's name and hull number.

BLOCK 4 - CWP SERIAL NO.

Obtain the next CWP serial number from the ship's QAO and enter in the block. Revision "-"(dash) will be entered on the initial version of all MCR/RECs. When a revision is required, enter the next revision letter. If necessary, prepare a new MCR/REC using the original numbers plus the next revision letter. Upon issuance of each REC revision, all prior revisions are canceled and superceded and shall be so annotated and retained as OQE. A REC revision must go through the same approval process as the original REC. REC Supplement or continuation sheets (QA-10) shall not be used as an alternate to revision of the REC.

BLOCK 5 - J.O./JCN

Enter the JCN for the maintenance action.

BLOCK 6 - ASSOCIATED CWP(s)/REC(s)

Shipyard use only.

BLOCK 7 - ORIGINATOR

Enter the name (and badge/grade/rank) of the person preparing the CWP.

BLOCK 8 - ORGANIZATION

Enter the division of the person preparing the CWP.

BLOCK 9 - SYSTEM REPAIRED/RE-ENTERED

Enter the system(s) being repaired/re-entered.

BLOCK 10 - REPAIR/RE-ENTRY LOCATION

Enter the physical location of the work.

BLOCK 11 - COMPONENT(s)

Enter the noun name of the component(s) being repaired/re-entered.

BLOCK 12 - JID MAP/DWG WITH REV

a. Enter the number and revision of the appropriate mapping drawing(s) for the work. If no mapping drawing is available, list the most appropriate arrangement or component drawing or diagram. For component repair, enter the applicable document (Standard Navy Valve Drawing, Vendor Drawing, etc.) which depicts the disturbances of the item (work in place or shop work). Based on the scope of work planned, several drawings may need to be referenced. If necessary, local sketches are authorized.

b. The general order of precedence for entering Joint Identification (JID) is:

(1) JID number from the SUBSAFE Joint Mapping Plan, if there is one.

(2) JID number from the Joint Index Drawing, ship or class, for welding.

(3) Joint description/JID from Assembly or Arrangement/Installation Drawing. The drawing chosen must adequately portray the joints to be broken.

(4) Drawings/diagrams from technical manual.

(5) A locally prepared sketch where other alternatives do not adequately describe the joints to be broken. Since the sketch will not be retrievable elsewhere, it must be kept in the REC package as OQE.

BLOCK 13 - WORK AND TESTING TO BE PERFORMED AND WORK AND TEST REFERENCE DOCUMENTS

Enter the total scope of work and testing required for certification of this repair/re-entry (e.g., ripout, repair, restore, replace, reinstall). Enter the work and test description and make positive reference to the TWD, which contains the detailed work procedure, material requirements, testing and certification to be performed. If additional space is needed to properly identify all elements, then a QA form 10 will be used to supplement this

block. The information provided in Block 6 does not need to be repeated in Block 13. The description of work on each REC revision shall detail the total revised Scope of Work. Cumulative partial descriptions do not satisfy this requirement.

BLOCK 14 - APPLICABLE JOINT NO(s), OR, IF NOT SUPPLIED, SPECIFIC BOUNDARIES

Enter the JID to be repaired/re-entered. If joint numbers are not supplied, specify boundaries in specific terms (e.g., body to bonnet joint of valve ASW-29) or assign local joint numbers. If local joint numbers are assigned, the sketch used to identify the joints must be included as OQE in the completed CWP. Listing of work boundary "end points" in lieu of listing discrete individual joints does not satisfy this requirement.

BLOCK 15 - PRIME APPROVAL SIGNATURE

a. BLOCK 15A. The QAO will sign, legibly print or stamp his/her name and badge/grade/rank and enter the date indicating the package is technically correct.

b. BLOCK 15B. The Department Head will sign, legibly print or stamp his/her name and badge/grade/rank and enter the date granting permission for work to be conducted. **No work can start prior to this signature.**

c. BLOCK 15C. For nuclear system work, the ship's Commanding Officer (Reactor Officer for CVNs) will sign, legibly print or stamp his/her name and badge/grade/rank and enter the date granting permission for work to be conducted in accordance with Part I, Chapter 2, Appendix D of this Volume. **No nuclear work can start prior to this signature.** The Immediate Superior In Command (ISIC) Material Officer will counter sign and enter his/her badge/grade/rank to indicate review for testing of repair activity accomplished nuclear work in accordance with Part I, Chapter 2, Appendix D of this Volume. For oxygen, SUBSAFE, Scope of Certification or Safety of Flight Critical Component work, the ship's Engineer Officer (Chief Engineer for CVNs) will sign, legibly print or stamp his/her name and badge/grade/rank and enter the date, granting permission for work to be conducted in accordance with Part I, Chapter 2, Appendix D of this Volume. **No nuclear, oxygen system, SUBSAFE, Scope of Certification or Safety of Flight Critical Component work can start prior to this signature.**

d. BLOCK 15D. The Officer Of the Deck/Duty Officer or Engineering Officer of the Watch/Engineering Duty Officer, depending on the work to be performed, will sign, legibly print or stamp his/her name and badge/grade/rank and enter the date authorizing the work to start. The signature establishes the work and CWP start date and signifies that the system/component is in a condition to accomplish the work.

NOTE: COMPLETE BLOCKS 16, 17 AND 18 BEFORE PERFORMING ANY SHIPBOARD TESTING. IF REWORK BECOMES NECESSARY AS THE RESULT OF SHIPBOARD TESTING, THE REQUIREMENTS OF PART I, CHAPTER 2, PARAGRAPH 2.3.7.2 OF THIS VOLUME SHALL BE FOLLOWED. FOR SHIP-TO-SHOP MAINTENANCE, BLOCKS 16, 17 AND 18 DO NOT NEED TO BE COMPLETED FOR IN-PROCESS TESTING IDENTIFIED AS PART OF THE CWP "PROCEDURE" SECTION. AFTER COMPLETING THE PROCEDURE AND BEFORE PERFORMING THE CWP "TESTING AND INSPECTION" SECTION, COMPLETE BLOCKS 16, 17, AND 18.

BLOCK 16 - SUPPORTING DOCUMENTATION

The Lead Work Center (LWC) Division Officer will identify all supporting documentation required and generated (QA forms 2, 12, 17, 17A, 17B, 17C, 18, 18A, 20, 20A, 20B, 20C, 26, 27, 34, 35) as established by the CWP. A typical entry would be: Non-nuclear - QA2(3), QA10(1), QA12(1, SSN765-001-93), QA26(1), QA34(1); Nuclear – QA2(1), QA10(1), QA26(1), QA34(1), RFI Tag(1). List only QA form 2s for new material installed in the system or component.

BLOCK 17 - VERIFICATION OF WORK COMPLETION

The LWC Division Officer will sign, legibly print or stamp his/her name (and badge/grade/rank) and enter the date certifying that the production work described by the MCR/REC has been accomplished in accordance with the specified instructions and that the required documentation for the production work as described in Block 16 has been completed, reviewed and is correct.

BLOCK 18 - CERTIFICATION OF DOCUMENTATION OF PRODUCTION WORK

The QAO will sign, legibly print or stamp his/her name and badge/grade/rank and enter the date certifying that all documentation for the production work specified in Block 16 has been reviewed for accuracy and completeness and is complete and accurate.

BLOCK 19 - CERTIFICATION OF TESTING RESULTS

The QAO will sign, legibly print or stamp his/her name and badge/grade/rank and enter the date certifying that the testing invoked for this MCR/REC has been completed satisfactorily. The test documentation specified in Block 16 has been completed, has been reviewed, and is complete and accurate.

BLOCK 20 - FINAL MCR/REC CLOSEOUT CERTIFICATION

The Department Head will sign, legibly print or stamp his/her name and badge/grade/rank and enter the date certifying that all documentation related to this MCR/REC has been reviewed for accuracy and completeness and is complete and accurate. For oxygen, SUBSAFE, Scope of Certification or Safety of Flight Critical Component work, the ship's Engineer Officer (Chief Engineer for CVNs) shall perform this certification and sign, legibly print or stamp his/her name and badge/grade/rank and enter the date.

BLOCK 21 - SHIP'S COMMANDING OFFICER SIGNATURE

The ship's Commanding Officer (Reactor Officer for CVNs) will sign, legibly print or stamp his/her name and grade/rank and enter the date acknowledging that the MCR/REC has been closed by the Department Head in accordance with Part I, Chapter 2, Appendix D of this Volume.

SITUATION 2. CONTROLLED WORK (NUCLEAR/LEVEL I/SOC/OTHER)/SUBSAFE REC BY REPAIR ACTIVITY AND SHIP OR REPAIR ACTIVITY ONLY.

a. The following instructions contain the minimum information and controls necessary to maintain certified systems on board ship, or to document new work for eventual certification when work is performed by Ship's Force and a repair activity or by a repair activity only on a certified ship or component.

b. Each block number on the MCR/REC, QA form 9 corresponds to the same number below. The number identifies the purpose and use of the entry on the MCR/REC.

c. The planner will fill in Blocks 1 – 14. All other blocks will be filled in/signed by the personnel assigned or their authorized representatives. Such authorized representatives will be designated in writing in an approved ship's/activity's instruction.

BLOCK 1 - PAGE 1 OF

Enter the total number of pages (QA form 9 plus any QA form 10 used as a supplement).

BLOCK 2 - [ ] SUBSAFE/REC [ ] NUCLEAR [ ] LEVEL I [ ] SCOPE OF CERTIFICATION [ ] SFCC [ ] OTHER

Check or "X" the appropriate block and, if "OTHER" is checked, will enter the appropriate level of control (e.g., P-1, P-3a, P-LT).

BLOCK 3 - SHIP HULL NO.

Enter ship's name and hull number.

BLOCK 4 - CWP SERIAL NO.

a. For Ship's Force and FMA work, obtain the next CWP serial number from the ship's QAO and enter it in the block. For controlled or SUBSAFE work to be performed by the repair activity only (in repair activity shops and the repair activity does no work onboard the ship, examples include ship to shop work; rotatable pool assets) obtain the next CWP serial number from the FMA QAO and enter it in the block. Revision "-" (dash) will be entered on the initial version of all MCR/RECs. When a revision is required, enter the next revision letter. If necessary, prepare a new MCR/REC using the original numbers plus the next revision letter.

b. For FMA work on a SUBSAFE system, the REC number will be obtained from the ship's QAO and entered after the CWP number (e.g., CWP/REC number). Upon issuance of each REC revision, all prior revisions are canceled and superceded and shall be so annotated and retained as OQE. A REC revision must go through the same approval process as the original REC. REC Supplement or continuation sheets (QA-10) shall not be used as an alternate to revision of the REC.

BLOCK 5 - J.O./JCN

Enter the JCN for the maintenance action.

BLOCK 6 - ASSOCIATED CWP(s)/REC(s)

Shipyard use only.

BLOCK 7 - ORIGINATOR

Enter the name (and badge/grade/rank) of the person preparing the CWP.

BLOCK 8 - ORGANIZATION

Enter the division of the person preparing the CWP.

BLOCK 9 - SYSTEM REPAIRED/RE-ENTERED

Identify the system(s) being repaired/re-entered.

BLOCK 10 - REPAIR/RE-ENTRY LOCATION

Identify the physical location (i.e., ship or shop) of the work.

BLOCK 11 - COMPONENT(s)

Identify the noun name of the component(s) being repaired/re-entered.

BLOCK 12 - JID MAP/DWG WITH REV

a. Enter the number and revision of the appropriate mapping drawing(s) for the work. If no mapping drawing is available, list the most appropriate arrangement or component drawing or diagram. For component repair, enter the applicable document (Standard Navy Valve Drawing, Vendor Drawing, etc.) which depicts the disturbances of the item (work in place or shop work). Based on the scope of work planned, several drawings may need to be referenced. If necessary, local sketches are authorized.

b. The general order of precedence for entering JID is:

(1) JID number from the SUBSAFE Joint Mapping Plan, if there is one.

(2) JID number from the Joint Index Drawing, ship or class, for welding.

(3) Joint description/JID from Assembly or Arrangement/Installation Drawing. The drawing chosen must adequately portray the joints to be broken.

(4) Drawings/diagrams from technical manual.

(5) A locally prepared sketch where other alternatives do not adequately describe the joints to be broken. Since the sketch will not be retrievable elsewhere, it must be kept in the REC package as OQE.

BLOCK 13 - WORK AND TESTING TO BE PERFORMED AND WORK AND TEST REFERENCE DOCUMENTS

Enter the total scope of work and testing required for certification of this repair/re-entry (e.g., ripout, repair, restore, replace, reinstall). Enter the work and test description and make positive reference to the TWD, which contains the detailed work procedure, material requirements, testing and certification to be performed. If additional space is needed to properly identify all elements, then a QA form 10 will be used to supplement this block. The information provided in Block 6 does not need to be repeated in Block 13. The description of work on each REC revision shall detail the total revised Scope of Work. Cumulative partial descriptions do not satisfy this requirement.

BLOCK 14 - APPLICABLE JOINT NO(s), OR, IF NOT SUPPLIED, SPECIFIC BOUNDARIES

Enter the JID to be repaired/re-entered. If joint numbers are not supplied, specify boundaries in specific terms (e.g., body to bonnet joint of valve ASW-29) or assign local joint numbers. If local joint numbers are assigned, the sketch used to identify the joints must be included as OQE in the completed CWP. Listing of work boundary "end points" in lieu of listing discrete individual joints does not satisfy this requirement.

BLOCK 15 - PRIME APPROVAL SIGNATURE

a. BLOCK 15A. The QAO will sign, legibly print or stamp his/her name and badge/grade/rank and enter the date indicating the package is technically correct. **No work can start prior to this signature.**

b. BLOCK 15B. The Department Head will sign, legibly print or stamp his/her name and badge/grade/rank and enter the date granting permission for work to commence. **No SUBSAFE work can start prior to this signature.**

c. BLOCK 15C. For nuclear, oxygen, SUBSAFE, Scope of Certification or Safety of Flight Critical Component work, the ship's Engineer Officer (Reactor Officer for CVNs) will sign, legibly print or stamp his/her name and badge/grade/rank and enter the date, granting permission for work to be conducted. **No nuclear, oxygen system, SUBSAFE, Scope of Certification or Safety of Flight Critical Component work can start prior to this signature.**

d. BLOCK 15D. The Officer Of the Deck/Duty Officer or Engineering Officer of the Watch/Engineering Duty Officer, depending on the work to be performed, will sign, legibly print or stamp his/her name and badge/grade/rank and enter the date, authorizing the work to start. This signature establishes the work and CWP start date and signifies that the system/component is in a condition to accomplish the work. This signature is not required for repair activity generated MCR/RECs to repair ship to shop items from tended ships (e.g., periscopes, relief valves, antennae).

NOTE: COMPLETE BLOCKS 16, 17, AND 18 BEFORE PERFORMING ANY SHIPBOARD TESTING. IF REWORK BECOMES NECESSARY AS THE RESULT OF SHIPBOARD TESTING, THE REQUIREMENTS OF PART I, CHAPTER 2, PARAGRAPH 2.3.7.2 OF THIS VOLUME SHALL BE FOLLOWED. FOR SHIP-TO-SHOP MAINTENANCE, BLOCKS 16, 17, AND 18 DO NOT NEED TO BE COMPLETED FOR IN-PROCESS TESTING IDENTIFIED AS PART OF THE CWP "PROCEDURE" SECTION. AFTER COMPLETING THE PROCEDURE AND BEFORE PERFORMING THE CWP "TESTING AND INSPECTION" SECTION, COMPLETE BLOCKS 16, 17, AND 18.

BLOCK 16 - SUPPORTING DOCUMENTATION

a. The LWC Division Officer will identify all supporting documentation required and generated (QA forms 2, 12, 17, 17A, 17B, 17C, 18, 18A, 20, 20A, 20B, 20C, 26, 27, 34, 35) as established by the CWP. A typical entry would be: Non-nuclear - QA2(3), QA10(1), QA12(1, SSN765-001-93), QA20(2), QA20A(2), QA26(1), QA34(1); Nuclear - QA1(1), QA2(1), QA10(1), QA20(2), QA20A(2), QA26(1), QA34(1), RFI Tag(1).

b. For activities using the Task Group Instruction (TGI) process. Deficiency Logs (DL) do not have to be listed in this block since DLs are integral to the TGI. The TGI should be cited in Block 16 if not already cited in Block 13. QA forms and other individual OQE records must be listed.

BLOCK 17 - VERIFICATION OF WORK COMPLETION

The LWC Division Officer will sign, legibly print or stamp his/her name (and badge/grade/rank) and enter the date, certifying that the production work described by the MCR/REC has been accomplished in accordance with the specified instructions and that the required documentation for the production work as described in Block 15 has been completed, reviewed and is correct.

BLOCK 18 - CERTIFICATION OF DOCUMENTATION OF PRODUCTION WORK

The QAO will sign, legibly print or stamp his/her name and badge/grade/rank and enter the date, certifying that all documentation for the production work specified in Block 16 has been reviewed for accuracy and completeness and is complete and accurate.

BLOCK 19 - CERTIFICATION OF TESTING RESULTS

The QAO will sign, legibly print or stamp his/her name and badge/grade/rank and enter the date, certifying that the testing invoked for this MCR/REC has been completed satisfactorily. The test documentation specified in Block 16 has been completed, reviewed, and is complete and accurate.

BLOCK 20 - FINAL MCR/REC CLOSEOUT CERTIFICATION

The Department Head will sign, legibly print or stamp his/her name and badge/grade/rank and enter the date, certifying that all documentation related to this MCR/REC has been reviewed for accuracy and completeness and is complete and accurate.

BLOCK 21 - SHIP'S COMMANDING OFFICER SIGNATURE

For "Ship's Force and FMA" MCR/REC, the ship's Commanding Officer (Reactor Officer for CVNs) will sign, legibly print or stamp his/her name and grade/rank and enter the date, in accordance with Part I, Chapter 2, Appendix D of this Volume, acknowledging that the MCR/REC has been closed by the Repair Officer. For "FMA ONLY" MCR/REC, this block is marked N/A.

HULL NO. _____
CWP SER. NO. _____
REV. NO. _____
PAGE ___ OF ___

MAINTENANCE CERTIFICATION RECORD/RE-ENTRY CONTROL SUPPLEMENT SHEET
QA FORM 10

(This Page Intentionally Left Blank)

QA FORM 10 INSTRUCTIONS

MAINTENANCE CERTIFICATION RECORD/RE-ENTRY CONTROL SUPPLEMENT SHEET

PURPOSE: MCR/REC Supplement Sheets are used to record supplemental data required by the MCR/REC, QA form 9. Examples of supplemental data are:

a. Continuation of Blocks 12, 13, 14 and 16 of the QA form 9.

b. Rework.

PROCEDURE: The MCR/REC Supplement Sheet, QA form 10 may be used, as required, to record supplemental data required by the MCR/REC, QA form 9 (page number will normally be 2 of _). Record the QA form 9 block number and supplemental data. Record name and signature of the person recording the information (normally the person who is signing QA form 9) and date, except where the entry is preprinted by Planning prior to initial review for approval/opening.

(This Page Intentionally Left Blank)

CONTROLLED WORK PACKAGE (CWP)/RE-ENTRY CONTROL (REC) LOG
QA FORM 11

1. Page No.	2. Ship

3. CWP/REC SER NO.	4. LEVEL OF WORK	5. REVISIONS				6. SYSTEM/COMPONENT	7. PRIME RESPONSIBILITY WORK CENTER OR GROUP	8. DATE Issued	Started	Closed	9. REMARKS.
		- D	A E	B F	C G						
		- D	A E	B F	C G						
		- D	A E	B F	C G						
		- D	A E	B F	C G						
		- D	A E	B F	C G						
		- D	A E	B F	C G						
		- D	A E	B F	C G						
		- D	A E	B F	C G						
		- D	A E	B F	C G						
		- D	A E	B F	C G						
		- D	A E	B F	C G						
		- D	A E	B F	C G						
		- D	A E	B F	C G						
		- D	A E	B F	C G						
		- D	A E	B F	C G						
		- D	A E	B F	C G						
		- D	A E	B F	C G						
		- D	A E	B F	C G						
		- D	A E	B F	C G						
		- D	A E	B F	C G						

(This Page Intentionally Left Blank)

QA FORM 11 INSTRUCTIONS

CONTROLLED WORK PACKAGE (CWP)/RE-ENTRY CONTROL (REC) LOG

PURPOSE: To provide a record of ship and repair activities entries into SUBSAFE, nuclear, Level I, Deep Submergence SOC and other certified systems or components. The CWP/REC Log will summarize the chronological record of CWP and REC for the life of the ship.

PROCEDURE: The numbered blocks on the CWP/REC Log, QA form 11 correspond to the same number below. A CWP/REC Log will be maintained by each ship, FMA and naval shipyard as follows:

a. The log is maintained by the QAO for ships and repair activities.

b. When the CWP/REC is performed by the ship alone, the serial number will be recorded in the ship's CWP/REC Log.

c. The FMA will also have a tended ship CWP/REC Log that records entries for work on each tended ship.

d. When the CWP/REC is a Ship's Force provided serial number, it will be recorded in both the ship's CWP/REC Log and in the FMA's tended ship CWP/REC Log.

BLOCK 1 - PAGE NO.

As each new page is started, the QAO will enter the appropriate page number(s).

BLOCK 2 - SHIP

The QAO will enter the ship's name and hull number. Locally pre-printed forms with the ship's name and hull number are acceptable.

BLOCK 3 - CWP/REC NUMBER

For controlled (i.e., Level I, Nuclear, Scope of Certification) or SUBSAFE work to be performed by Ship's Force only, the ship's QAO will issue the CWP/REC numbers sequentially for entry in Block 4 of the ship's QA form 9. For controlled or SUBSAFE work performed by the repair activity on, or for a tended ship, the ship's QAO will issue CWP/REC numbers sequentially to the repair activity for entry in Block 4 of the repair activity's QA form 9. For controlled or SUBSAFE work to be performed by the repair activity only, not associated with a specific ship (example – rotatable pool assets), the repair activity's QAO will issue the CWP/REC numbers sequentially for entry in Block 4 of the repair activity's QA form 9. The format of the CWP/REC serial numbers will be the serial number followed by the year (e.g., 1-90, 123-01).

NOTE: SOC IS A LEVEL OF WORK TERM FOR DEEP SUBMERGENCE SYSTEM WORK IN ACCORDANCE WITH NAVSEA SS800-AG-MAN-010/P9290 USED IN CONJUNCTION WITH WORK ON HOST SYSTEMS FOR DRY DECK SHELTERS.

BLOCK 4 - LEVEL OF WORK

The QAO will enter the level of the work (e.g., SUBSAFE, Nuclear, Level I, SFCC or SOC). For SUBSAFE/SOC work on a tended unit by a repair activity other than during a scheduled Chief of Naval Operations Availability, the repair activity will obtain a REC number from the ship’s QAO and record it in this block (e.g., SUBSAFE/REC No.).

NOTE: IF THE MCR IS REVISED BEYOND REVISION "G", THE ADDITIONAL REVISION LETTERS WILL BE ENTERED AND CROSSED OUT IN THE REMARKS BLOCK, BLOCK 9.

BLOCK 5 - REVISIONS

The QAO will circle, cross out, and/or record the applicable revision. This column controls the revisions, with the first version being "-" (dash), the first revision being A, second revision being B, etc. When the initial CWP/REC number is issued the dash (-) will be circled, when subsequent revisions of the MCR are issued the appropriate letter (A, B, C) will be circled and the previously circled Revision Letter will be crossed out using an "X".

BLOCK 6 - SYSTEM/COMPONENT

The QAO will enter the same system as in Block 9 or component as in Block 11 of the QA form 9.

NOTE: COMPONENT IS PREFERRED IF IT IS A VALVE OR EQUIPMENT WITH A UNIQUE IDENTIFIER (e.g., ASW-617, NO. 1 MAIN CONDENSER, ETC.).

BLOCK 7 - PRIME RESPONSIBILITY WORK CENTER OR GROUP

The QAO will enter the division/organization responsible for the work. For a repair activity, this is the LWC as assigned by the Planning Officer. For the ship, this is the WC initiating the QA form 9.

NOTE: IF THE COMMANDING OFFICER OF THE SHIP IS REQUIRED TO REVIEW FOR CLOSING THE QA FORM 9, THEN THE DATE IN BLOCK 20 OF THE QA FORM 9 DOCUMENTING THE CO's REVIEW SHALL BE DOCUMENTED IN BLOCK 8 OF THE QA FORM 11.

BLOCK 8 - DATE

The QAO will enter the date the MCR serial number is assigned in the column "ISSUED". In the column "STARTED", the QAO will enter the same date as in Block 15D of the MCR as soon as Block 15 is dated. In the column "CLOSED", the QAO will enter the same date documented in Block 20 or 21, as applicable, of the QA form 9.

BLOCK 9 - REMARKS

This column is to be used to record revisions of the MCR/REC, if more revisions are issued after revision "G", and to summarize the work description and any other pertinent information (e.g., repair ASW-22, accomplish Unrestricted Operation (URO) Maintenance Requirement Card (MRC) 008 on ASW-7, overhaul number 2 periscope).

DEPARTURE FROM SPECIFICATION REQUEST
QA FORM 12

1. DEPARTURE NO.	2. SHIP	3. JCN	4. CWP/REC SER. NO.	5. DATE

6. ORIGINATOR: NAME

7. DEPARTURE TYPE ☐ MAJOR ☐ MINOR ☐ SUBSAFE ☐ SOC ☐ FBW ☐ SFCC

8. ADDITIONAL CLASSIFICATION (SHIPYARD AND SOC USE ONLY) ☐ WAIVER ☐ DEVIATION ☐ SSDR ☐ TVD ☐ FBWDR
ISIC CONCURRENCE (REQUIRED FOR CONDITIONAL DFS) ☐ YES ☐ NO

9. SYSTEM/COMPONENT/LOCATION & SHORT DESCRIPTION

10. NAVSEA DRAWING/PLAN NUMBER/PIECE NUMBER

11. REFERENCES

12. APPLICABLE SPECIFICATIONS

13. SITUATION/DEGREE OF NON-COMPLIANCE

14. COMMENTS/RECOMMENDATION (TEST CONDUCTED, AFFECTED SYSTEMS)

15. DATE ANSWER REQUESTED BY:

16. SUBMITTING ACTIVITY: TYPED OR PRINT NAME/SIGNATURE (RO/DH)

17. NEW JCN NUMBER FOR CONDITIONAL DEPARTURES:

18. DFS APPROVAL COMMENTS

ISIC ☐ APPROVED ☐ DISAPPROVED ☐ CONCUR, FORWARDED TO TYCOM LOCAL TECH AUTHORITY FOR ACTION

NAME SIGNATURE DATE

TYCOM ☐ CONCUR ☐ APPROVED ☐ DISAPPROVED ☐ FORWARDED TO NAVSEA/NAVAIR/LOCAL TECH AUTHORITY FOR ACTION

NAME SIGNATURE DATE

LOCAL TECHNICAL AUTHORITY ☐ APPROVED ☐ DISAPPROVED ☐ FORWARDED TO NAVSEA/NAVAIR FOR ACTION

NAME SIGNATURE DATE

NAVSEA/NAVAIR ☐ APPROVED ☐ DISAPPROVED ☐ TEMPORARY ☐ PERMANENT ☐ PRECEDENT

NAME SIGNATURE DATE

19. COPY TO:

(This Page Intentionally Left Blank)

QA FORM 12 INSTRUCTIONS

DEPARTURE FROM SPECIFICATION REQUEST

PURPOSE: Used to report and request approval of a DFS.

PROCEDURE:

1. The activity finding or causing a DFS will immediately report the DFS to the appropriate approval authority using this form.

2. The numbered blocks on QA form 12 correspond with instructions listed below.

BLOCK 1 - DEPARTURE NO.

Enter the next sequential number from the affected ship serial file.

BLOCK 2 - SHIP HULL NO.

Enter the name and hull number of the ship on which the DFS occurred.

BLOCK 3 - JCN

Enter the JCN for the job upon which the DFS occurred or was identified.

BLOCK 4 - CWP/REC SER. NO.

Enter the CWP/REC serial number or enter N/A if no CWP/REC is required. Do not list the CWP/REC revision.

BLOCK 5 - DATE

Enter the date the DFS request is filled out.

BLOCK 6 - ORIGINATOR

Print or type the name of the originator of the DFS.

BLOCK 7 - DEPARTURE TYPE

Enter the applicable departure type. (Major or Minor) and classification as necessary (SUBSAFE, SOC, FBW or SFCC).

BLOCK 8 - ADDITIONAL CLASSIFICATION (SHIPYARD AND SOC USE ONLY)

Enter the necessary information as required. If the departure is conditional, mark the appropriate block to indicate that ISIC concurrence is required.

BLOCK 9 - SYSTEM/COMPONENT/LOCATION

Enter the affected system, component, and location. A short description may be added if needed to fully identify the system/component/location.

BLOCK 10 - NAVSEA DRAWING/PLAN NUMBER/PIECE NUMBER

Enter the NAVSEA drawing number, plan number and piece number, as applicable, that shows the component or system on which the DFS is initiated.

BLOCK 11 - REFERENCES

Enter additional references used (e.g., Training Aid Booklet, Ships Information Book, Ships Systems Manual, Steam and Electric Plant Manual, SUBSAFE Certification Boundary Book, Tech Manual) as applicable.

BLOCK 12 - APPLICABLE SPECIFICATIONS

Enter the applicable specifications. Be descriptive and specific. Enter the reference that provided the specification. This block should fully explain the specifications and include the JID or part applicable (e.g., perform "J" pressure test to test pressure depth after mechanical assembly of joints "XXXX" in which software was replaced). This block must be explicit, so that no reference is required to the work procedure to understand the specifications.

BLOCK 13 - SITUATION/DEGREE OF NON-COMPLIANCE

Enter what the actual condition is. Sketches, drawings, QA forms, etc., may be attached, if they clarify the description of the non-conforming condition.

BLOCK 14 - COMMENTS/RECOMMENDATION (TEST CONDUCTED, AFFECTED SYSTEMS)

Enter comments/recommendations pertinent to the job. The comments will include recommendation and justification for approval of the DFS. Enter tests conducted and the results, SAT or UNSAT.

BLOCK 15 - DATE ANSWER REQUESTED BY

Enter date.

BLOCK 16 - SUBMITTING ACTIVITY

Type or print name and enter signature.

BLOCK 17 - NEW JCN NUMBER FOR CONDITIONAL DEPARTURES

Any departure that is conditional (requires future work to correct), Ship's Force will enter the new JCN that tracks the maintenance action to correct the deficient condition.

BLOCK 18 - DFS APPROVAL COMMENTS

a. Approval Activity Comments: The activity approving the DFS will enter remarks as appropriate and specify the time duration that the noncompliance is acceptable prior to correction. (Enter a date.)

b. ISIC: Check the appropriate blocks. Check the FWD TO TYCOM/LOCAL TECH. AUTHORITY FOR ACTION block for any DFS requiring TYCOM action and print name, sign and date.

c. For an at sea generated DFS, the Commanding Officer will use the ISIC section to indicate approval of the DFS.

d. In the instances where a depot activity forwards a conditional departure to the ISIC for concurrence, the ISIC will check the block labeled CONCUR, FORWARDED TO TYCOM/LOCAL TECH. AUTHORITY FOR ACTION. The ISIC will type or print name, sign and date.

e. TYCOM: Check the appropriate blocks. Type or print name, sign, and date.

f. LOCAL TECHNICAL AUTHORITY: When appropriate, check the appropriate blocks and type or print name, sign and date. Check the FWD TO NAVSEA/NAVAIR FOR ACTION BLOCK for any DFS requiring NAVSEA/NAVAIR final approvals.

g. NAVSEA/NAVAL AIR SYSTEMS COMMAND (NAVAIR) action: The appropriate blocks will be checked and signed by NAVSEA.

h. NAME/SIGNATURE/DATE: The ISIC Material Officer, ISIC QAO, TYCOM Representative, Local Technical Authority Chief Engineer, or Commanding Officer (for an at-sea initiated DFS) will type or print name and title, sign and date in the appropriate block signifying technical acceptance of the DFS. In the case of shipyard conditional departures, the ISIC signature only signifies acceptance that work to clear the deficient condition is acceptable to be delayed to a future time period. The ISIC signature in this case does not signify acceptance of the technical merit of the departure.

BLOCK 19 - COPY TO

Enter activities to receive copy.

(This Page Intentionally Left Blank)

DEPARTURE CLEARANCE REPORT
QA FORM 12A

1. FROM:	2. DATE
3. TO:	
4. SUBJECT DFS NUMBER _____ DATED _____ ON SYSTEM/COMPONENT _____ IN USS _____	
5. REFERENCE(s): (A) COMFLTFORCOMINST 4790.3 - JOINT FLEET MAINTENANCE MANUAL (B) (C) (D)	
6. JUSTIFICATION	
7. CLEAR / CANCEL SUBJECT DFS IN ACCORDANCE WITH REFERENCE (A). (CIRCLE ONE)	
8. SIGNATURE TITLE DATE	

(This Page Intentionally Left Blank)

QA FORM 12A INSTRUCTIONS

DEPARTURE CLEARANCE REPORT

PURPOSE: Provide document for reporting the clearance of a DFS.

PROCEDURE: The numbered blocks on QA form 12A correspond with the instructions listed below. QA form 12A should be completed by the ship on which the DFS exists as soon as the discrepant condition has been corrected.

BLOCK 1 - FROM

Enter the ship's name and hull number.

BLOCK 2 - DATE

Enter date the DFS was cleared/cancelled.

BLOCK 3 - TO

Enter the appropriate ISIC or, if clearing ship approved DFS, enter "CO".

BLOCK 4 - SUBJECT

Enter the required data taken from the QA form 12.

BLOCK 5 - REFERENCE(s)

Enter all applicable references.

BLOCK 6 - JUSTIFICATION

Enter detailed justification for the clearance/cancellation listing all references, tests and inspections used for the DFS clearance.

BLOCK 7 - CLEAR/CANCEL

Circle the appropriate action.

BLOCK 8 - SIGNATURE

QAO print name, enter signature, title and date.

(This Page Intentionally Left Blank)

SURVEILLANCE/MONITORING/AUDIT DISCREPANCY RECORD
QA FORM 14

1. ITEM	2. WC	3. DATE

4. PART 1 - DISCREPANCY DESCRIPTION	
5. ORIGINATOR SIGNATURE	6. QA SUPERVISOR SIGNATURE

QA RETAIN ORIGINAL AND FWD COPY TO DIVISION

7. PART 2 – CORRECTIVE ACTION	
ROOT CAUSE:	
CORRECTIVE ACTION:	
8. ECD	9. DIVISION OFFICER (SIGNATURE) DATE

RETAIN COPY AND FWD COPY TO QA OFFICER

10. PART 3 - REINSPECTION/AUDIT COMMENTS	
11. QA OFFICER/QA SUPERVISOR (QAO/QAS) (SIGNATURE) DATE	
COPY TO:	ORIGINAL - QA DIVISION RECORD FILE

(This Page Intentionally Left Blank)

QA FORM 14 INSTRUCTIONS

SURVEILLANCE/MONITORING/AUDIT DISCREPANCY RECORD

PURPOSE: Provide a method or means of reporting discrepancies found or noted by auditors during audits and surveillance and corrective actions taken by the WC or division. This form is used to document the results of internal audits. It provides a method of recording discrepancies, reworks, and processing action until final clearance. It can be used to correct or add Objective Quality Evidence to a certified CWP. When maintained in an auditable fashion, the forms will provide a record of completed corrective action. This form can also be used in a program of trend evaluation to improve overall FMA and ship's maintenance quality.

NOTE: A COPY OF ALL ASSOCIATED QA FORMS 14 SHALL BE INCLUDED WITH THE CWP, QA FORM AND/OR REC. DEFICIENCIES FOUND IN A CLOSED CWP, QA FORM AND/OR REC THAT REQUIRE CORRECTION SHALL BE DOCUMENTED ON A QA FORM 14. NO CHANGE TO THE CLOSED CWP, QA FORM AND/OR REC IS PERMITTED EXCEPT AS CITED IN THIS NOTE. THE QA FORM 14 SERIAL NUMBER WILL BE ANNOTATED AT THE TOP OF THE QA FORM 9 OR QA FORM TO CLEARLY INDICATE A QA FORM 14 WAS WRITTEN AFTER THE CWP, QA FORM AND/OR REC WAS CLOSED/CERTIFIED AND THAT ADDITIONAL OQE IS ASSOCIATED WITH THE CLOSED PACKAGE.

NOTE: THE REPAIR OFFICER, RESPONSIBLE DEPARTMENT HEADS, DIVISION OFFICERS, AND QAO MUST ENSURE THAT ALL QA FORMS 14 ARE APPROPRIATELY PROCESSED TO ENSURE THE PROPER URGENCY FOR THE RESPONSE AND ACTIONS.

PROCEDURE: The numbered blocks in QA form 14 correspond with the instructions listed below.

BLOCK 1 - ITEM

The QAS will enter the next sequential number from the QA-14 Log.

BLOCK 2 - WC

Person discovering the discrepancy will enter the WC causing the discrepancy.

BLOCK 3 - DATE

Person discovering the discrepancy will enter the date the report was initiated.

BLOCK 4 - DISCREPANCY DESCRIPTION

Person discovering the discrepancy will enter a description of the discrepancy and if associated with a CWP, enter the CWP serial number.

BLOCK 5 - ORIGINATOR SIGNATURE

The individual discovering the discrepancy will sign, and legibly print, type or stamp his/her name.

BLOCK 6 - QA SUPERVISOR SIGNATURE

The QAO or a QAS will sign, and legibly print, type or stamp his/her name signifying a review of and concurrence of the validity of the discrepancy.

BLOCK 7 - CORRECTIVE ACTION

a. ROOT CAUSE: The Division Officer of the WC responsible (Block 2) for causing the discrepancy will enter the root cause of the discrepancy.

b. CORRECTIVE ACTION: The Division Officer of the WC causing the discrepancy will enter a description of the corrective action that has been or will be taken to prevent recurrence including any process improvements and policy/procedural changes.

c. When the QA form 14 is used to correct or add Objective Quality Evidence to a certified CWP, enter the required data that should have been recorded in the corrective action portion of Block 7.

BLOCK 8 - ECD

The Division Officer of the WC responsible for causing the discrepancy will enter the Estimated Completion Date (ECD) of the corrective action stated in Block 7.

BLOCK 9 - DIVISION OFFICER/DATE

The Division Officer of the WC responsible for causing the discrepancy will enter signature and date, and legibly print, type or stamp his/her name after Blocks 7 and 8 are complete.

BLOCK 10 - RE-INSPECTION/AUDIT COMMENTS

Upon completion of the required corrective actions or reaching the ECD of Block 8, a QAS, or individual that wrote the deficiency, should perform a re-inspection audit and enter the re-inspection results and any additional comments. This shall include a positive statement regarding effectiveness of the corrective action.

BLOCK 11 - QA OFFICER/QA SUPERVISOR SIGNATURE

The QAO or QAS will enter signature and date, and legibly print, type or stamp his/her name indicating acceptance of Block 10 comments.

TEST AND INSPECTION RECORD

QA FORM 17 Planning shall fill in blocks identified by a ♦ prior to issuing

Page____ of ____

◆1. SHIP HULL NO.	◆2. JCN	◆3. LWC/SHOP	◆4. CWP/REC SER NO.	◆5. SYSTEM/COMPONENT

◆6. REFERENCES (COMPONENT DETAIL/ASSEMBLY DRAWING AND REV)		
A.	**B.**	**C.**
D.	**E.**	**F.**

◆7. PART DESCRIPTION/PIECE NO.:	

◆8. DESCRIPTION OF TEST AND/OR INSPECTION:

9. RESULTS

10. CRAFTSMAN SIGNATURE	DATE	11. QA INSPECTOR SIGNATURE	DATE

12. RECORD HAS BEEN REVIEWED FOR COMPLETENESS

WCS SIGNATURE (QAS SIGNATURE FOR SUBSAFE/SOC/SFCC ONLY)	DATE

(This Page Intentionally Left Blank)

QA FORM 17 INSTRUCTIONS

TEST AND INSPECTION RECORD

PURPOSE: To provide a report form for work, tests and inspections not covered by other QA forms. This form can be used for flushes, operational testing, shop inspections, cleanliness inspections, generic material identity test, and other tests, inspections, and information deemed necessary.

PROCEDURE: The numbered blocks on QA form 17 correspond with the instructions listed below. The planning organization shall fill in Blocks 1 through 8 (identified by a ◆) prior to issuing the CWP.

BLOCK 1 - SHIP HULL NO.

Enter the ship's name and hull number.

BLOCK 2 - JCN

Enter the JCN.

BLOCK 3 - LWC

Enter the shop number of the LWC.

BLOCK 4 - CWP/REC SERIAL NO.

Enter the CWP/REC serial number or enter N/A if no CWP/REC is required. Do not list the CWP/REC revision.

BLOCK 5 - SYSTEM/COMPONENT

Enter the noun name of the system or component to be tested or inspected.

BLOCK 6 - REFERENCES (COMPONENT ASSY/DETAIL DRAWING AND REVISION)

Enter all references used to identify component parts, material information, and required test/inspection including revision letter and if applicable, the assembly number (Assy D, Assy RA, etc.). For original issue drawings (no revisions) enter a dash (-). For vendor drawings, include vendor name. Revisions for technical manuals are not required.

BLOCK 7 - PART DESCRIPTION/PIECE NO.

Enter the part number/description (pc 5, bonnet, stem bore, backseat, etc.).

BLOCK 8 - DESCRIPTION OF TEST AND/OR INSPECTION

Enter a detailed description of tests/inspections/work to be performed or note the reference used and paragraph/note number that specifies the inspection or test. Enter the required pressure, duration, medium and acceptance criteria of the test. If the test or inspection has a numerical value (e.g., maximum and/or minimum value), the values will be written in. If listing the pressure values would classify the work procedure, then the symbols "J" or "H" with the applicable reference may be used instead of classifying the document.

NOTE: WHEN MANUFACTURING PARTS, ENTER THE MATERIAL SPECIFICATION OR NSN FOR RAW STOCK AND RECORD THE PLAN AND WHEN APPLICABLE, THE PIECE NUMBER OF THE PART MANUFACTURED.

NOTE: FOR URO MRCs TO BE PERFORMED AS A RETEST, LIST THE SPECIFIC APPLICABLE PORTIONS OF THE URO MRC REQUIRED TO RECERTIFY THE SYSTEM.

BLOCK 9 - RESULTS

Enter the specific results of the test, inspection or work specified in Block 8. Indicate satisfactory or unsatisfactory results or completion. If UNSAT, the craftsman will:

a. Initiate action to resolve the condition.

b. Record actions taken in this block to correct the unsatisfactory condition.

c. Sign in this block (Block 9).

Do not sign Block 10 unless signing for satisfactory results or completion are obtained or for an UNSAT condition that has been accepted.

NOTE: IF THE TEST OR INSPECTION REQUIRES THE USE OF TMDE, RECORD THE INSTRUMENT, RANGE AND SERIAL NUMBER AND CAL DUE DATE IN THE RESULTS BLOCK.

NOTE: WHEN VULCANIZING O-RINGS, ENTER THE STOCK NUMBER AND EXPIRATION DATE (IF PROVIDED).

NOTE: IF SKETCHES/DRAWINGS OR ADDITIONAL INFORMATION IS REQUIRED TO SUPPLEMENT THIS REPORT, EACH DRAWING, ETC., WILL BE NUMBERED AND SIGNED BY THE CRAFTSMAN AND QAI MAKING UP THE REPORT.

NOTE: FOR OPERATIONAL JOINT TIGHTNESS TESTS ENTER ACTUAL PRESSURE AND DURATION. TEST DURATION WILL INCLUDE THE REQUIRED TEST PERIOD AND THE TIME REQUIRED TO COMPLETE THE INSPECTION. FOR URO MRCs PERFORMED AS A RETEST, COMPLETE REQUIRED PORTIONS OF THE URO MRC DATA FORMS AND ENTER SATISFACTORY OR UNSATISFACTORY IN BLOCK 9.

BLOCK 10 - CRAFTSMAN/DATE

Craftsman print name, enter signature and date after completing Block 9. Do not sign Block 10 unless satisfactory results or completion are obtained or the UNSAT condition has been accepted.

NOTE: FOR NDT INSPECTIONS, THE NDT INSPECTOR WILL SIGN BLOCK 10 AS THE CRAFTSMAN AND THE NDT SUPERVISOR WILL SIGN BLOCK 11 FOLLOWING REVIEW OF THE FORM.

BLOCK 11 - QA INSPECTOR/DATE

Inspector print name, enter signature and date verifying the accuracy of the data recorded in Block 9.

BLOCK 12 - RECORD HAS BEEN REVIEWED FOR COMPLETENESS

QAS or QAO will print name, enter signature and date for final review, signifying the accuracy of the completed form for SUBSAFE/SOC/SFCC items only. For other components, the Work Center supervisor shall sign and date the form signifying the accuracy of the completed form.

EPOXY REPAIR RECORD

QA FORM 17A (06/05) Planning shall fill in blocks identified by a ♦ prior to issuing

Page ____ of ____

♦1. SHIP HULL NO.	♦2. JCN	♦3. LWC/SHOP	♦4. CWP/REC SER NO.	5. SYSTEM/COMPONENT/ROTATABLE POOL SER NO.	♦6. REFERENCES (COMP DETAIL/ASSY DWG & REV)
					A.

♦7. EPOXY REPAIRS ARE IAW:	8. LEGEND FOR EPOXY METHOD (ENTER APPLICABLE SYMBOL(S) IN BLOCK 9)				
☐ UIPI 2560-107 ☐ UIPI 6300-905 ☐ OTHER _____	SH – SHIM B – BUSHING	PE – POWDER EPOXY REPAIR CE – COLD EPOXY COATING	CP –- COLD PATCH SL – SLEEVE	♦OT - OTHER (specify): _____	B. C.

9. DESCRIPTION OF REPAIR(S)			10. REPAIR(S) & TEST ACCOMPLISHED				
			10A. PRE-EPOXY DIMENSIONS			10B. EPOXY APPLIED	10C. REQUIRED TESTS/RESULTS
♦PART NO./NAME & DESCRIPTION OF DEFECT AREA(S) (USE BLOCK 11 FOR ADDITIONAL INFO, IF REQUIRED)	♦REF DWG LTR	♦ UIPI 2560-107 METHOD OR EPOXY METHOD (See Block 8)	DEPTH OF MACHINING (INCHES) REMAINING WALL THICKNESS (INCHES)	DEPTH (INCHES) OF REMAINING DEFECTS	SHIM/SLEEVE THICKNESS (INCHES) & MAT'L USED	EPOXY MATERIAL & BATCH NO. USED	REQUIRED TEST LEGEND (Enter number below) 1. TAP 2. PULL 3. SPARK 4. VT CURE 5.OTHER (Specify)
A.							♦ REQUIRED TEST (See Test Legend) TEST RESULTS ☐ SAT ☐ UNSAT FINAL SURFACE FINISH MEETS REQUIREMENTS
			SIGNATURE/BADGE/DATE			SIGNATURE/BADGE/DATE	SIGNATURE/BADGE/DATE
B.							♦ REQUIRED TEST (See Test Legend) TEST RESULTS ☐ SAT ☐ UNSAT FINAL SURFACE FINISH MEETS REQUIREMENTS
			SIGNATURE/BADGE/DATE			SIGNATURE/BADGE/DATE	SIGNATURE/BADGE/DATE

11. ADDITIONAL INFORMATION/SKETCHES: This block may be used to provide additional information, signatures, and sketches to clarify EPOXY repair area(s). Use the back of the sheet for additional space. (CRAFTSMAN/QAI SUBMIT A DF TO RESOLVE UNSAT DATA)

12. QA INSPECTOR/SHOP SUPERVISOR SIGNATURE/BADGE NO. (RECORD REVIEWED FOR FINAL ACCEPTANCE)		13. QAS SIGNATURE /BADGE NO. (RECORD HAS BEEN REVIEWED FOR COMPLETENESS)	
	DATE		DATE

(This Page Intentionally Left Blank)

QA FORM 17A INSTRUCTIONS

EPOXY REPAIR RECORD

PURPOSE: To document the proper OQE for epoxy repairs on components when directed by the Technical Work Document.

NOTE:

1. EACH FORM ALLOWS FOR TWO EPOXY REPAIRS TO BE DOCUMENTED, BUT MUST BE LIMITED TO A SINGLE COMPONENT (E.G., TD-29/30 VALVE ASSEMBLY).

2. REWORK: IN CASES WHERE REWORK IS REQUIRED AFTER CRAFTSMAN CERTIFICATION OF A RECORD, A NEW RECORD AND WORK AUTHORIZING DOCUMENT IS REQUIRED.

3. IN CASES WHERE REWORK IS REQUIRED DUE TO AN IN-PROCESS FAILURE, THE FOLLOWING PROCESS SHALL BE USED:

   a. CHECK THE "UNSAT" BOX IN THE "TEST RESULTS" SECTION OF BLOCK 10 ALONG WITH AN EXPLANATION OF FAILURE IN BLOCK 11. LEAVE REMAINING UNSIGNED BLOCKS BLANK.

   b. ENTER "REWORK FOR ITEM 9X" (WHERE X IS THE LETTER DESIGNATOR FOR THE BLOCK 9 ITEM LINE (E.G., 9A, 9B)) OR SIMILAR WORDS IN THE NEXT BLANK "PART NO./NAME/ DESCRIPTION OF DEFECT AREAS" BLOCK, ALONG WITH AN ASTERISK OR OTHER MARK WITH A CORRESPONDING EXPLANATION IN BLOCK 11 WITH SIGNATURE, BADGE NUMBER AND DATE. IF THERE IS NO EMPTY ITEM LINE, ANOTHER QA FORM 17A MAY BE USED AS A CONTINUATION SHEET. IF THE RECORD CONTAINS MULTIPLE PAGES, IDENTIFY THE PAGE THAT CONTAINS THE ITEM LINE FOR WHICH THE REWORK IS ACCOMPLISHED (E.G., 9A OF PAGE 1).

   c. RE-ENTER ALL OF THE ORIGINALLY REQUIRED TESTS IN THE NEW ITEM LINE AND COMPLETE ALL BLOCKS EXCEPT THE "PART NO./NAME/DESCRIPTION OF DEFECT AREAS" BLOCK WHICH IS ANNOTATED AS DESCRIBED IN PARAGRAPH B. ABOVE. IT IS ACCEPTABLE FOR THE CRAFTSMAN TO COPY ENTRIES INTO PLANNING BLOCKS FROM THE ORIGINAL PLANNING ENTRIES.

SCOPE: Documentation with this QA form is required for epoxy repair of the following:

- SUBSAFE components
- Scope of Certification (SOC) components
- Seawater ball valves

PROCEDURE: PLANNING DEPARTMENT: Provide guidance in accordance with UIPI 2560-107 or UIPI 6300-905, and provide QA-17A records as part of the TWD or DL.

The numbered blocks on QA form 17A correspond with the instructions listed below. Planning shall fill in blocks identified by a ♦ prior to issuing QA form 17A. The shop craftsman is responsible for all other blocks on the form unless otherwise specified.

TOP OF FORM - PAGE _____ OF _____

Enter page numbers.

BLOCK 1 - SHIP HULL NO.

Enter the ship's name and hull number or enter the appropriate rotatable pool system designator (e.g., TRIPER, CCRP, AERP, SSN 688CL, etc.).

BLOCK 2 - JCN

Enter the Job Control Number (JCN). Naval shipyards enter Job Order and KeyOp.

BLOCK 3 - LWC/SHOP

Enter the lead shop (e.g., X38, outside machinist).

BLOCK 4 - CWP/REC SERIAL NO.

Enter the CWP/REC serial number or enter NA if no CWP/REC is required. Do not list the REC revision.

BLOCK 5 - SYSTEM/COMPONENT/ROTATABLE POOL SER NO.

Enter the noun name of the system and component (if applicable) (e.g., MSW-25). If the record is for in-shop restoration of rotatable/factory pool material, enter the serial number of the material.

NOTE: ROTATABLE POOL/FACTORY SERIAL NUMBERS MAY BE ENTERED BY THE PLANNER, IF KNOWN, OR THE CRAFTSMAN AS SPECIFIED BY LOCAL INSTRUCTIONS.

BLOCK 6 - REFERENCES (COMP DETAIL/ASSY DWG & REV)

Enter all references used to identify component parts, material information and test/inspection requirements. Include revision letter and if applicable, identify the assembly number (e.g., Assy D, Assy RA, etc.). For original issue (non revised) drawings, enter a dash (-). Revisions for Technical Manuals are not required. Include vendor name for vendor drawings.

BLOCK 7 - EPOXY REPAIRS ARE IAW

Check the "UIPI 2560-107" or "UIPI 6300-905" box when applicable; otherwise check the "OTHER" box and specify the procedure.

BLOCK 8 - LEGEND FOR EPOXY METHOD

Identifies the designators for Block 9 (EPOXY METHOD). Planning shall specify the type of epoxy repair on the line following the "OT - OTHER" designator when a required repair method is not listed.

BLOCK 9 - DESCRIPTION OF REPAIR(S)

NOTE: PLANNING SHALL COMPLETE ALL SECTIONS OF BLOCK 9. ADDITIONAL QA 17A FORMS MAY BE ADDED AS CONTINUATION SHEETS IF NECESSARY.

PART NO./NAME & DESCRIPTION OF DEFECT AREA(S)

Enter part number and/or name (e.g., pc 5, bonnet; pc 3, body, etc.) and description of defect areas (e.g., O-ring groove pitted, stem bore, backseat, etc.). Ensure each surface area being epoxy repaired is clearly identified.

NOTE: USE BLOCK 11 AND/OR THE BACK OF THE SHEET FOR ADDITIONAL INFORMATION AND/OR SKETCHES.

REF DWG LTR(S)

Enter the letters corresponding to the reference listed in Block 6 which provides the material, dimensional and testing/inspection information for the items listed in the "PART NO./NAME & DESCRIPTION OF DEFECT AREA(S)" block.

UIPI 2560-107 METHOD OR EPOXY METHOD

Enter the epoxy repair method code from UIPI 2560-107 when applicable, or use a symbol from the legend in Block 8 that identifies the method of epoxy repair being accomplished when UIPI 6300-905 or OTHER instruction is identified in Block 7. For an epoxy repair method not identified in the Block 8 legend, enter "OT" and specify the epoxy repair method on the line following "OT - OTHER" in Block 8.

BLOCK 10 - REPAIR(S) & TEST ACCOMPLISHED

NOTE: CRAFTSMAN SHALL COMPLETE ALL SECTIONS OF BLOCKS 10A AND 10B. PLANNING SHALL COMPLETE BLOCK 10C.

BLOCK 10A. - PRE-EPOXY DIMENSIONS

DEPTH OF MACHINING

When required by the TWD, record the thickness of the material removed during machining. Enter "NA" when not required by the TWD or material removal is not accomplished.

REMAINING WALL THICKNESS

When required by the TWD, enter the wall thickness dimensions after machining or removing material. Dimensions must take into account the depth of remaining defects. Enter "NA" when material is not removed or wall thickness documentation is not required by the TWD.

DEPTH OF REMAINING DEFECTS

Enter the maximum depth of remaining defects. Enter "No Defects Remain" if there are no remaining defects after machining.

SHIM/SLEEVE THICKNESS & MAT'L USED

Enter "NA" when shims are not used. Enter the thickness of the shim or sleeve (or bushing used as a sleeve) used (e.g., 0.032, 1/8 or 3/32, etc.). When installing "S", "L", or top hat shims, enter the thickness of the upper, the middle and the lower legs as applicable. Enter the generic material (e.g., titanium) or a stock number of the shim when provided by the naval or local stock program. When this block is being used to document installation of the shim in lieu of a QA form 34, then the stock number (NSN), part number, drawing and piece number, generic or material spec marking, or results of generic material identity testing shall be documented here also. If reinstalling an existing shim, enter "Reinstalled existing".

SIGNATURE/BADGE/DATE

Craftsman enter signature, badge number and date for pre-epoxy dimensions recorded in Block 10A.

BLOCK 10B. - EPOXY APPLIED

EPOXY MATERIAL & BATCH NO. USED

Enter the epoxy material (e.g., 3M Epoxy Adhesive EC-2216B/A) used and the batch number when provided on the container (e.g., Batch 1234).

SIGNATURE/BADGE/DATE

Craftsman enter signature, badge number and date signifying the epoxy was applied per the requirements and the data recorded in Block 10B.

BLOCK 10C. - REQUIRED TESTS/RESULTS

Enter the number(s) for the required test(s) from the legend.

TEST RESULTS FINAL SURFACE FINISH MEETS REQUIREMENTS

The craftsman shall check the SAT or UNSAT block to indicate test.

SIGNATURE/BADGE/DATE

Craftsman enter signature, badge number and date signifying that each epoxy repair has been satisfactorily accomplished and tested in accordance with the requirements and the OQE documented in Blocks 7, 9, 10A, 10B and 11, and the surface finish meets requirements.

If UNSAT, the craftsman will initiate action to resolve the unsat condition and indicate the action taken in Block 11 and sign in Block 11. Do not sign Block 10 (for the specific line item) unless a satisfactory repair is completed or the unsat condition is accepted. If the condition is accepted, identify the document that grants acceptance in Block 11.

BLOCK 11 - ADDITIONAL INFORMATION/SKETCHES

This block can be used to provide additional information, signatures, and sketches (if required to clarify epoxy repair area(s) and/or shim/sleeve). If there is insufficient room, the back of the form or the addition of a second page is allowed for use. Include a signature, badge number and date with any additions to this block. Initials may be entered in lieu of an employee's signature and badge number, if a corresponding employee's signature and badge number appears elsewhere on the same page.

NOTE: IF MORE THAN ONE EPOXY REPAIR IS BEING ACCOMPLISHED, IDENTIFY THE ADDITIONAL INFORMATION, SIGNATURES AND SKETCHES BY THE LINE ITEM LETTERS IN BLOCK 9 (E.G., 9A, 9B).

BLOCK 12 - QA INSPECTOR/SHOP SUPERVISOR SIGNATURE/BADGE NO./DATE

Naval Shipyards: Production Shop Supervisor shall sign that the records have been reviewed for completeness.

BLOCK 13 - QAS SIGNATURE/BADGE NO./DATE

For SUBSAFE or SOC Components Only, QAS or cognizant QA representative as defined by local instructions, will sign, enter badge number and date in this block to indicate the completeness of the entries.

ELECTROPLATING REPAIR RECORD
QA FORM 17B (6/05)

Planning shall fill in blocks identified by a ♦ prior to issuing

Page _____ of ___

♦1. SHIP HULL NO.	♦2. JCN	♦3. .LWC/SHOP	♦4. CWP/ REC SER NO.	♦5. REFERENCES (COMP DETAIL/ASSY DWG & REV) A.
6. SYSTEM/COMPONENT/ROTATABLE POOL SER NO.	♦7. ELECTROPLATING PROCESSES ARE IAW: ☐ UIPI 0810-451 ☐ OTHER _____	8. LEGEND FOR TYPE OF REPAIR, SEE BLOCK 9 D = DYNAMIC SURFACES (CL 3) S = STATIC SURFACES (CL 2)♦OT = OTHER (SPECIFY)(e.g., CL-1, CL-3A, etc.)		B. C.

♦9. DESCRIPTION OF DEFECT & TYPE OF REPAIR					10. MATERIAL VERIFICATION & REPAIR (S) ACCOMPLISHED			♦11. REQD TEST (S)	12. TEST (S) RESULTS
♦ ITEM A. PART NO./ NAME/DESCRIPTION OF DEFECT (S)	♦ REF DWG LTR	♦BASE MATL	♦TYPE OF REPAIR (SEE BLOCK 8 ABOVE)	♦PLATING MATL REQD	BASE MATL VERIFIED ☐ SAT	APPLIED PLATING THICKNESS WITHIN MAX ALLOWED OR RANGE ☐ SAT	ELECTROPLATING HAS BEEN ACCOMPLISHED IN ACCORDANCE WITH REQUIREMENTS (Use Block 13 for clarification) SIGNATURE/BADGE/DATE	1. ADHESION 2. VT 3. PT 4. THICK 5. OTHER (SPECIFY)	2ND OPERATOR VERIFICATION OF SATISFACTORY TEST ACCOMPLISHED SIGNATURE/BADGE /DATE
					AFTER MACHINING DIMENSIONS: _____ REMAINING DEFECTS DEPTH_____ ☐ NONE				
	♦EXISTING PLATING MATL _____ NONE ☐		♦H2 BAKE REQD ☐ YES ☐ NO	♦MAX THICKNESS OR RANGE					
						PLATING MATL APPLIED:			
♦ ITEM B. PART NO./ NAME/DESCRIPTION OF DEFECT (S)	♦ REF DWG LTR	♦BASE MATL	♦TYPE OF REPAIR (SEE BLOCK 8 ABOVE)	♦PLATING MATL REQD	BASE MATL VERIFIED ☐ SAT	APPLIED PLATING THICKNESS WITHIN MAX ALLOWED OR RANGE ☐ SAT	ELECTROPLATING HAS BEEN ACCOMPLISHED IN ACCORDANCE WITH REQUIREMENTS (Use Block 13 for clarification) SIGNATURE/BADGE /DATE	1.ADHESION 2. VT 3. PT 4. THICK 5. OTHER (SPECIFY)	2ND OPERATOR VERIFICATION OF SATISFACTORY TEST ACCOMPLISHED SIGNATURE/BADGE/DATE
					AFTER MACHINING DIMENSIONS: _____ REMAINING DEFECTS DEPTH_____ ☐ NONE				
	♦EXISTING PLATING MATL NONE ☐		♦H2 BAKE REQD ☐ YES ☐ NO	♦MAX THICKNESS OR RANGE					
						PLATING MATL APPLIED:			

13. ADDITIONAL INFORMATION/SKETCHES: USE THE BACK OF THE SHEET FOR ADDITIONAL SPACE TO PROVIDE ADDITIONAL INFORMATION, AND SKETCHES TO CLARIFY ELECTROPLATE REPAIR AREA (S) (CRAFTSMAN/QAI SUBMIT A DF TO RESOLVE UNSAT DATA)

14. QA INSPECTOR/SHOP SUPERVISOR SIGNATURE/BADGE NO. (RECORD REVIEWED FOR FINAL ACCEPTANCE)	DATE	15. QAS SIGNATURE/BADGE NO. (RECORD HAS BEEN REVIEWED FOR COMPLETENESS)	DATE

(This Page Intentionally Left Blank)

QA FORM 17B INSTRUCTIONS

ELECTROPLATING REPAIR RECORD

PURPOSE: To document the proper OQE for electroplating repairs on components when directed by the work procedure.

PROCEDURE: The numbered blocks on QA form 17B correspond with the instructions listed below. The planner shall fill in blocks identified by a ♦ (1 through 9 and 11) prior to issuing the CWP.

TOP OF FORM - Page ___ of ___

Enter page numbers.

BLOCK 1 - SHIP HULL NO.

Enter the ship's name and hull number, or enter the appropriate rotatable pool system designator (e.g., TRIPER, CCRP, AERP, SSN 688CL, etc.).

BLOCK 2 - JCN

Enter the Job Control Number (JCN). Naval shipyards enter Job Order and KeyOp.

BLOCK 3 - LWC/SHOP

Enter the lead shop (e.g., X38, outside machinist).

BLOCK 4 - CWP/REC SERIAL NO.

(Work Packaging/Planning Organization/Craftsman) Enter the CWP or REC serial number or enter NA if no CWP/REC is required. Do not list the REC revision.

BLOCK 5 - REFERENCES (COMP DETAIL/ASSY DWG & REV)

Enter all references used to identify component parts, material information, and test/inspection requirements including revision letter and if applicable, the assembly number (e.g., Assy D, Assy RA, etc.). For original issue (non revised) drawings, enter a dash (-). Revisions for Technical Manuals are not required. Include vendor name for vendor drawings.

BLOCK 6 - SYSTEM/COMPONENT/ROTATABLE POOL SER NO

Enter the noun name of the system and component (if applicable) being plated, (e.g., MSW-25). If the record is for in-shop restoration of rotatable pool material, enter the serial number of the material when known.

NOTE: ROTATABLE POOL SERIAL NUMBERS MAY BE ENTERED BY THE CRAFTSMAN IF NOT ENTERED BY PLANNING ORGANIZATION.

BLOCK 7 - ELECTROPLATING PROCESSES ARE IN ACCORDANCE WITH

Mark the applicable box for the electroplating process. Specify the process when OTHER is marked. Do not enter revision/change of procedure.

BLOCK 8 - LEGEND FOR TYPE OF REPAIR

Identifies the designators for Block 9 (TYPE OF REPAIR). For other than DYNAMIC (D) or STATIC (S) surfaces, PLANNING ORGANIZATION shall specify the type of repair on the line following the "OT=OTHER" designator, or in Block 13 if additional space is needed.

BLOCK 9 - DESCRIPTION OF DEFECT & TYPE OF REPAIR

NOTE: PLANNING ORGANIZATION SHALL COMPLETE ALL SECTIONS OF BLOCK 9 EXCEPT AS NOTED. ADDITIONAL QA 17B FORMS MAY BE ADDED AS CONTINUATION SHEETS IF NECESSARY.

PART NO./NAME/DESCRIPTION OF DEFECT AREA(S)

Enter part number or name (e.g., pc. 5, bonnet, body, etc.) and description of defect areas. Include dimension after machining and maximum depth of remaining defects prior to plating (e.g., Stem bore O-ring groove pitted, machined 0.010", removed all defects). For more than one of a kind component (XYZ fitting, threaded end) enter the total number of items (e.g., XYZ fitting, threaded end, 6 ea.). Identify each surface area being plated as a separate line item.

NOTE: USE BLOCK 13 AND THE BACK OF THE SHEET FOR ADDITIONAL INFORMATION AND/OR SKETCHES.

REFERENCE DRAWING LETTER

Enter the letter(s) corresponding to the reference(s) listed in Block 5 which provided the material, dimensional, and/or test and inspection information for the items listed in the "PART NO./NAME/DESCRIPTION OF DEFECT(S)" block(s).

BASE MATERIAL

Enter the required base material.

EXISTING PLATING MATERIAL

Identify any known existing plating or mark the NONE box.

TYPE OF REPAIR

Enter the symbol from the legend in Block 8 that identifies the type of electroplating repair being accomplished.

HYDROGEN BAKE REQUIRED

Mark the YES box when hydrogen bake is required; otherwise mark the NO box.

PLATING MATERIAL REQ'D

Enter the plating material to be applied.

MAXIMUM THICKNESS OR RANGE ALLOWED

Enter the maximum plating thickness allowed or the allowable thickness range (minimum/maximum).

BLOCK 10 - MATERIAL VERIFICATION & REPAIR(S) ACCOMPLISHED

NOTE: THE CRAFTSMAN SHALL COMPLETE ALL SECTIONS OF BLOCK 10.

BASE MATERIAL VERIFIED

Craftsman shall visually compare the required base material identified and the base material to be plated for obvious discrepancies such as color of material or material markings, and ensure that all existing plating has been removed or identified as being existing. Perform a generic material test if existing material cannot be identified. Check the "SAT" block if no discrepancies are found. Report any discrepancies to PLANNING ORGANIZATION for resolution.

AFTER MACHINING DIMENSIONS

When required by the TWD, record the dimensions after machining.

REMAINING DEFECTS DEPTH

Record the depth of any remaining defects. If no defects remain, mark the NONE box.

APPLIED PLATING THICKNESS WITHIN MAX ALLOWED OR RANGE

Mark SAT if the thickness of plating meets the maximum thickness or range identified by PLANNING ORGANIZATION in Block 9.

PLATING MATERIAL APPLIED

Enter the generic plating material applied (e.g., nickel cap, copper fill, etc.).

NOTE: IF THE APPLIED PLATING THICKNESS IS BEYOND THE MAXIMUM ALLOWED OR NOT WITHIN THE SPECIFIED RANGE, STOP WORK AND OBTAIN FURTHER TECHNICAL DIRECTION.

ELECTROPLATING REPAIR HAS BEEN ACCOMPLISHED IN ACCORDANCE WITH REQUIREMENTS

Craftsman(s) shall sign, record badge number, print name and date verifying that each ELECTROPLATING application has been satisfactorily accomplished in accordance with the requirements and the OQE documented in Blocks 7, 9 and 10 (and 13 when used) and is complete and accurate. For cases where further machining is required, the electroplating craftsman that completed the plating shall sign this block to indicate application of electroplating only, prior to sending the component to the machining craftsman. After the machining and test have been accomplished, a final signature shall be made indicating satisfactory completion of the form and the testing. The last signature indicates final acceptance. Use Block 13 for clarification of requirements.

BLOCK 11 - REQUIRED TEST(S)

Enter the designator(s) (i.e., 1-5) for the test(s) required to ensure proper installation/bonding. For "Other" (5), enter the type of test required in the block or in Block 13 if additional space is needed.

BLOCK 12 - TEST(S) RESULTS

2ND Operator, Inspector, or other person qualified to the plating procedure (other than the workpiece craftsman) shall sign, record badge number, print name and date to indicate the coating meets the acceptance criteria of the required test(s).

NOTE: SATISFACTORY LIQUID PENETRANT TEST RESULTS SHALL BE DOCUMENTED IN ONE OF THE FOLLOWING MANNERS:

1. A QUALIFIED NDT INSPECTOR OR QAI MAY SIGN, RECORD BADGE NUMBER AND DATE TO INDICATE SATISFACTORY TEST RESULTS.

2. THE CRAFTSMAN MAY ENTER THE NON-DESTRUCTIVE TEST (NDT) RECORD NUMBER (OR ATTACH A COPY OF THE RECORD) THAT DOCUMENTS THE SATISFACTORY RESULTS OF NDT PERFORMED BY A QUALIFIED NDT INSPECTOR. THE CRAFTSMAN SHALL SIGN (NAME, BADGE, DATE) FOR EACH ENTRY.

BLOCK 13 - ADDITIONAL INFORMATION/SKETCHES

This block may be used to provide additional information, signatures, and sketches (if required to clarify electroplate repair area(s)). If there is insufficient room, use of the back of the form or the addition of a second page is allowed. Include signature, badge number and date (except where the entry is pre-printed on the form by PLANNING ORGANIZATION with any entries in this block). Initials may be entered in lieu of an employee's signature and badge number, if a corresponding employee's signature and badge number/printed name appears elsewhere on the same page.

NOTE: IF MORE THAN ONE ELECTROPLATING REPAIR IS BEING ACCOMPLISHED, IDENTIFY THE ADDITIONAL INFORMATION, SIGNATURES, AND SKETCHES BY THE LINE ITEM NUMBERS IN BLOCK 9 (e.g., 9a, 9b, etc.). IF THE RECORD CONTAINS MULTIPLE PAGES, INCLUDE THE PAGE NUMBER OF THE REFERENCED ITEM LINE NUMBER.

BLOCK 14 - QUALITY ASSURANCE INSPECTOR/SHOP SUPERVISOR SIGNATURE/BADGE NO.

Production shop supervisor shall sign and print name that the record has been reviewed for completeness.

BLOCK 15 - QAS SIGNATURE/BADGE NUMBER/RECORD HAS BEEN REVIEWED FOR COMPLETENESS

For SUBSAFE or SOC Components Only: QAS or authorized QAO representative, as defined by local instructions, will sign, enter badge number, print name and date this block to indicate the completeness of the entries.

COMPONENT REPAIR RECORD – (MACHINING/MANUFACTURING/MODIFICATIONS)

QA FORM 17C (6/05) Planning shall fill in blocks identified by a ♦ prior to issuing

Page of

♦1. SHIP	HULL NO.	♦2. JCN	♦3. LWC/SHOP	♦4. CWP/REC SER NO.	♦5. SYSTEM/COMPONENT/ROTATABLE POOL SER NO.

♦6. REFERENCES (COMPONENT DETAIL/ASSEMBLY DRAWING AND REV, SPECIFY ASSEMBLY NO. IF APPLICABLE)

A.	B.	C.
D.	E.	F.

♦7. DESCRIPTION OF REPAIR(S) | 8. RESULT OF REPAIR(S)

LINE NO.	♦ PART NO./ DESCRIPTION	♦ REF DWG LTR	♦ QTY	♦ DESCRIPTION OF MODIFICATION(S) / MANUFACTURING PROCESS / SUPPLEMENTAL INFORMATION / INSTRUCTION Describe action or use the following legends: MM-Minor Machining HW–Hand Working MF– Manufacturing V – Vulcanizing O-rings	♦ REQUIRED/ MINIMUM FINAL DIMENSION(S) AND TOLERANCE	ACTUAL FINAL DIMENSION(S)	**NEW MATERIAL** MANUFACTURED/INSTALLED			♦ TEST REQ'D	PROCESS IDENTIFIED, MATERIAL AND TEST HAS BEEN SATISFACTORILY ACCOMPLISHED IN ACCORDANCE WITH REQUIREMENTS. **MATERIAL NOT LISTED AS NEW, IS EXISTING AND IS ACCEPTABLE FOR RE-USE & IS INSTALLED.**	
							QTY	L O E	MATERIAL IDENT/ DESCRIPTION		CRAFTSMAN SIGNATURE/ BADGE NO.	DATE
1												
2												
3												
4												

9. ADDITIONAL INFORMATION/SKETCHES: This block can be used to provide additional information, signatures and sketches (if required). Use back of the sheet for additional space. If NDT is required, record satisfactory NDT report number in this block or attach a copy of the report. (CRAFTSMAN/QAI SUBMIT A DF TO RESOLVE UNSAT DATA)

10. QA INSPECTOR/SHOP SUPERVISOR SIGNATURE /BADGE NO.	11. QAS SIGNATURE/ BADGE NO. (RECORDS HAVE BEEN REVIEWED FOR COMPLETENESS)
(RECORD REVIEWED FOR FINAL ACCEPTANCE) DATE	DATE

(This Page Intentionally Left Blank)

QA FORM 17C INSTRUCTIONS

COMPONENT REPAIR RECORD

PURPOSE: To document the proper OQE for multiple repairs to a single component (i.e., machining, manufacturing, modifications) when directed by the work document.

PROCEDURE: The numbered blocks on QA form 17C correspond with the instructions listed below. Planning shall fill in blocks identified by a ♦ prior to issuing the CWP.

NOTE: THIS FORM ALLOWS MULTIPLE REPAIRS TO BE ACCOMPLISHED, BUT SHOULD BE LIMITED TO A SINGLE COMPONENT (E.G., TD-29/30 VALVE ASSEMBLY).

BLOCK 1 - SHIP HULL NO.

PLANNER - Enter the ship's name and hull number, or enter the appropriate rotatable pool system designator (e.g., TRIPER, CCRP, AERP, SSN 688CL, etc.).

BLOCK 2 - JCN

PLANNER - Enter the Job Control Number (e.g., 20884-EM01-2947, 3872556103/R01). Naval Shipyards enter Job Order and KeyOp.

BLOCK 3 - LWC/SHOP

PLANNER - Enter the lead shop (e.g., X56, outside machinist).

BLOCK 4 - CWP/REC SERIAL NO.

(REC Originator or PLANNER as defined by local instructions) Enter the CWP/REC serial number if applicable; otherwise mark NA. Do not list the REC Revision.

BLOCK 5 - SYSTEM/COMPONENT/ROTATABLE POOL SER NO.

PLANNER - Enter the noun name of the system, component (e.g., MSW-25). If the record is for in-shop repair/manufacture of rotatable pool item, enter the serial number of the item when known.

NOTE: ROTATABLE POOL SERIAL NUMBERS MAY BE ENTERED BY THE CRAFTSMAN IF NOT ENTERED BY THE PLANNER.

BLOCK 6 - REFERENCES (COMPONENT DETAIL/ASSEMBLY DRAWING AND REVISION)

PLANNER - Enter all references used to identify component parts, material information and required testing/inspection. Include revision letter and if applicable, the assembly number (e.g., Assy D, Assy RA, etc.). For original issue (non revised) drawings, enter a dash (-). For vendor drawings, include vendor name. Revisions for technical manuals are not required.

BLOCK 7 - DESCRIPTION OF REPAIR(S)

NOTE: PLANNING SHALL COMPLETE ALL SECTIONS OF BLOCK 7.

LINE NO. Pre-filled. A number to provide traceability to new material documented in Block 8.

PART NO./ DESCRIPTION — Enter part number/description/component assembly (e.g., pc 5, bonnet, body, stem bore, backseat, etc.).

NOTE: USE BLOCK 9 AND THE BACK OF THE SHEET FOR ADDITIONAL INFORMATION AND/OR SKETCHES.

REF DWG LTR — Enter applicable reference letter(s) of the drawing or document listed in Block 6 that provides the material and/or dimensional information for the items listed in the "PART NO./DESCRIPTION" block.

QTY — Enter quantity of items to repair. Enter NA if not applicable.

DESCRIPTION OF MODIFICATION(S) / MANUFACTURING PROCESS / SUPPLEMENTAL INFORMATION / INSTRUCTION

Enter description of action to perform (e.g., drill and nylok in accordance with reference (b), **MF** stem in accordance with reference (c), **V** in accordance with reference (d), **MM** .005" to remove pits, splice o-rings, etc.). The description must clearly identify the surface(s) to be machined. Use legend for abbreviation.

NOTE: USE BLOCK 9 AND THE BACK OF THE SHEET FOR ADDITIONAL INFORMATION AND/OR SKETCHES. IF ADDITIONAL SPACE IS REQUIRED, ADDITIONAL SHEETS SHALL HAVE CONTINUING PAGE NUMBERS AND INFORMATION FROM BLOCKS 1 THROUGH 5 ON EACH SHEET.

REQUIRED MINIMUM/FINAL DIMENSION(S) AND TOLERANCE

When minimum/final dimension documentation is required, Planning shall specify the final dimension(s) and tolerance(s). Enter NA in this block and the Block 8 ACTUAL FINAL DIMENSIONS section if not applicable.

BLOCK 8 - RESULT OF REPAIR(S)

NOTE: THE CRAFTSMAN SHALL COMPLETE ALL SECTIONS OF BLOCK 8 EXCEPT THE SECTION TITLED "TEST REQ'D".

ACTUAL FINAL DIMENSION(S)

When final dimension documentation is required by Planning, the craftsman shall record the actual final dimension(s) identified in Block 7. If final dimension documentation is not required, Planning shall enter NA in the block.

NOTE: CRAFTSMAN MAY ENTER "NA" IF REQUIRED/MINIMUM FINAL DIMENSION(S) AND TOLERANCE SECTION OF BLOCK 7 IS MARKED "NA" BY PLANNING.

NEW MATERIAL - MANUFACTURED/INSTALLED

Enter the following information for any parts/material, Level I and non-level, in the appropriate blocks. If a portion of a new valve is used to replace parts (e.g., bonnet and disc assembly), document the Level I number of the new valve and list the parts that the assembly consists of in the remarks block with a note that the stem and disc assembly were taken from the new valve.

QTY — Enter the quantity of the replacement parts installed. Enter NA for raw material used in manufacture.

NOTE: THE TERM "ASSEMBLY" REFERS TO ONE PACKAGE OF PARTS (E.G., STEM AND DISC ASSEMBLY OR BALL AND SEAT ASSEMBLY) WHERE THE ITEM IS ORDERED UNDER ONE STOCK NUMBER, AND IS ASSIGNED ONE LEVEL I NUMBER.

LOE (Level of Essentiality, Level I) – Enter the MIC level (e.g., "I" or "L/I") for the part or assembly. Enter NA or dash (-) for non-Level.

MATERIAL IDENT/ DESCRIPTION Identification shall be in accordance with Table 1 or Forces Afloat. Record one of the following for raw material used to manufacture components:

TABLE 1- DOCUMENTATION REQUIREMENTS	
Material Control Level	**Required Information**
Level I Material Other Than Fasteners	MIC Number and any other traceability number, including any local traceability number (e.g., PNSY MLN – examples Z142, AB12).
Level I Fasteners	Either the MIC number or Material Marking, Color Code, Heat/Lot Number, and Manufacturers Symbol (Note: For nuts containing a self-locking insert, the color of the insert is the Manufacturer's symbol).
Controlled Structural Material And SOC Control Division "A" Material	Traceability Number
SOC Control Division "B" Material	Markings providing identification to material type or specification
AERP And Other Rotatable Pool Material (688 Class, TRIPER, Etc.)	Enter the appropriate rotatable pool serial number (e.g. RP-148A, 4810-013-5812-A3-0113, TIN -292-11893, etc.)
Transferred And Cannibalized Material	Enter the Equipment Removal List No. or other material History/ Traceability number (ERL# XXXX, SSBN-600 EHF #24, etc.)
Other Material Within The LEVEL I/SUBSAFE Boundary And SOC Control Division "C" Material	1. Enter at least one of the following documentation attributes: a. Stock Number (from package/container) b. Part Number (from package/piece) c. Part Number and associated Manufacturing Work Procedure (for manufactured items) d. Local Traceability Number (from piece/tag) e. Drawing and Piece Number (from piece/tag) f. Generic, MIL-SPEC, or Material Specification Marking (from piece) g. NDT record numbers or test results for items verified by generic material testing. 2. For SOC components only: Enter the stock number of the "O-ring lubricant or any sealant used during assembly.

- MIC NUMBER
- RAW MATERIAL NSN
- GENERIC MATERIAL
- MIL-SPEC
- MATERIAL SPECIFICATION MARKING
- NDT RECORD OR TESTING RESULTS FOR GENERIC MATERIAL TESTING

NOTE: IF NDT IS REQUIRED, RECORD SATISFACTORY NDT REPORT NUMBER OR ENCLOSURE NUMBER IN THIS BLOCK AND ATTACH/INCLUDE A COPY OF THE REPORT.

TEST REQ'D Planning shall enter the test(s) (e.g., NDT, hydrostatic pressure testing, etc.) required to ensure proper certification.

PROCESS IDENTIFIED, MATERIAL AND TEST HAS BEEN SATISFACTORILY ACCOMPLISHED IN ACCORDANCE WITH REQUIREMENTS

Craftsman shall sign, record badge number and date of the signature, verifying that each repair process, material installed/utilized, and test has been satisfactorily accomplished in accordance with the requirements and the OQE documented in Blocks 7 and 8, respectively.

NOTE: IF UNSATISFACTORY, THE CRAFTSMAN WILL INITIATE ACTION TO RESOLVE THE UNSATISFACTORY CONDITION (E.G., SUBMIT A DF). INDICATE THE ACTION TAKEN TO RESOLVE THE UNSATISFACTORY CONDITION ALONG WITH A SIGNATURE, BADGE NUMBER AND DATE IN BLOCK 9. DO NOT SIGN BLOCK 8 (FOR THE SPECIFIC LINE NO.) UNLESS A SATISFACTORY REPAIR IS COMPLETED OR THE UNSATISFACTORY CONDITION IS ACCEPTED.

BLOCK 9 - ADDITIONAL INFORMATION/SKETCHES

This block can be used to provide additional information, signatures, and sketches (if required to clarify repair area(s)). If there is insufficient room, the back of the form or the addition of a second page is allowed. Include a signature, badge number, and date with any additions to this block. Initials may be entered in lieu of an employee's signature and badge number, if a corresponding employee's signature and badge number appears elsewhere on the same page.

NOTE: IF MORE THAN ONE REPAIR IS BEING ACCOMPLISHED, IDENTIFY THE ADDITIONAL INFORMATION, SIGNATURES, AND SKETCHES BY THE LINE ITEM NUMBERS IN BLOCK 7.

BLOCK 10 - QA INSPECTOR/SHOP SUPERVISOR/BADGE NO./DATE

NA if inspection is not required by the technical work document (e.g., TGI, FWP).

BLOCK 11 - QAS SIGNATURE/BADGE NO. (RECORDS HAVE BEEN REVIEWED FOR COMPLETENESS)

For SUBSAFE or SOC Components Only: QAS or cognizant QA representative as defined by local instructions, will sign, enter badge number, and date in this block to indicate the completeness of the entries.

For other components: the Production Shop/Work Center Supervisor shall sign that the records have been reviewed for completeness.

SUBMARINE FLIGHT CRITICAL COMPONENT (SFCC) ACCESS, REMOVAL AND INSTALLATION RECORD

QA FORM 17D (1/08) Planning shall fill in blocks identified by a ♦ prior to issuing

♦1. SHIP HULL NO.	♦2. JCN	♦3. LWC/SHOP	♦4. CWP/REC SER NO.
♦5. SYSTEM(S) COMPONENT		♦6. NOMENCLATURE	♦7. REFERENCE DESIGNATION
8. PART NO.		9. NSN/SMIC	10. SERIAL NO.

♦11. REFERENCES

A.		B.		C.	
D.		E.		F.	

12. DIAGNOSTICS

ALERT MESSAGE(S)	SYSTEM STATUS DISPLAY FAULT STATUS	LINE REPLACEABLE UNIT (LRU) CALLOUT(S)	ADDITIONAL DIAGNOSTIC INDICATIONS

13. SFCC REMOVAL

PERMISSION OBTAINED TO SECURE EQUIP	SFCC UNAVAIL & POWERED DOWN	ESD MEASURES OBSERVED	CABLING DISCONNECTED IDENTIFIED/TAGGED	SFCC BAGGED & TAGGED	CHASSIS LOCATION & INFO	SW VERSION REMOVED	SFCC PLACED IN SEGREGATED LOC
☐SAT/UNSAT☐	☐SAT/UNSAT☐	☐SAT/UNSAT☐	☐SAT/UNSAT☐	☐SAT/UNSAT☐			☐SAT/UNSAT☐

14. SFCC INSTALLATION

SFCC UNAVAIL & POWERED DOWN	ESD MEASURES OBSERVED	RECEIPT INSPECTION	SFCC CONFIGURED	SW VERSION INSTALLED	CHASSIS LOCATION & INFO	CABLE RECONNECTED	PERMISSION OBTAINED TO POWER UP EQUIPMENT
☐SAT/UNSAT☐	☐SAT/UNSAT☐	☐SAT/UNSAT☐	☐SAT/UNSAT☐			☐SAT/UNSAT☐	☐SAT/UNSAT☐

15. SFCC RESTORATION		**16. OPERATIONAL VERIFICATION**			
SFCC POWERED UP	ONLINE/AVAILABLE	SYSTEM STATUS OK	BUILT IN TEST	SFCC ENGAGED	OPERABILITY TEST

17. SOFTWARE INSTALLATION AND VERIFICATION

INSTALLATION SOFTWARE REV	SFCC SOFTWARE REV	VDD CHECKSUM	INSTALLATION CHECKSUM

18. REMARKS

19. CRAFTSMAN SIGNATURE	DATE	20. AIT LEADER/INSPECTOR SIGNATURE	DATE

21. RECORD HAS BEEN REVIEWED FOR COMPLETENESS

OSIC/QAS/QAO SIGNATURE	DATE

(This Page Intentionally Left Blank)

QA FORM 17D INSTRUCTIONS

SUBMARINE FLIGHT CRITICAL COMPONENT (SFCC) ACCESS, REMOVAL AND INSTALLATION RECORD

REFERENCES:

(a) NAVSEA T9044-AD-MAN-010 - Requirements Manual for Submarine Fly-By-Wire Ship Control Systems
(b) NAVSEA S9560-CK-SCB-010 - SEAWOLF Class Submarine Fly-By-Wire Ship Control System Certification Boundary Book
(c) NAVSEA S9560-CH-SCB-010 - VIRGINIA Class Submarine Fly-By-Wire Ship Control System Certification Boundary Book

NOTE: PLANNING SHALL FILL IN BLOCKS IDENTIFIED BY A ♦ PRIOR TO ISSUING.

PURPOSE: To provide a standard form to document the SFCC access, removal and installation record capturing the requirements of reference (a), Appendix H.

REQUIREMENTS:

1. The FORM 17D is required for all SFCC work within the boundary specified in reference (a).

2. A separate Form 17D must be used for each component that requires controlled access, removal or installation documentation. The Form 17D shall be used to provide an SFCC access, removal and installation record capturing the requirements of reference (a), Appendix H.

NOTE: ANY BLOCK NOT USED WILL BE MARKED “N/A”.

BLOCK 1 - SHIP/HULL NO.

Planner enter the ship's name and hull number.

BLOCK 2 - JCN

Planner enter the Job Control Number (JCN).

BLOCK 3 - LWC/SHOP

Planner enter the lead shop assigned to install the component.

BLOCK 4 - CWP/REC SER NO.

Planner enter the CWP/REC serial number or enter NA if no CWP/REC is required. Do not list the CWP/REC revision.

BLOCK 5 - SYSTEM(S)/COMPONENT

Planner enter the noun name of the system and component (if applicable) (e.g., SCPU CHANNEL A CPU#2 or CIRCUIT 1DB). If record is for inshop restoration, enter the serial number of the material if known.

BLOCK 6 - NOMENCLATURE

Planner enter the system/component nomenclature as described in the technical documentation.

BLOCK 7 - REFERENCE DESIGNATION

Planner enter the reference designation of the component as described in the technical documentation.

BLOCK 8 - PART NO.

Craftsman enter the component part number and SFCC Program Designator as defined in reference (b) or (c).

BLOCK 9 - NSN/SMIC

Craftsman enter the component NSN/SMIC as defined in reference (b) or (c).

BLOCK 10 - SERIAL NO.

Craftsman enter the component serial number.

BLOCK 11 - REFERENCES

Planner enter the applicable component technical reference documents.

BLOCK 12 - DIAGNOSTICS

Craftsman

Record diagnostic data as appropriate for SFCC being replaced as part of repair efforts. Mark “N/A” if repair effort is not being performed.

- Alert Messages - Enter any observed Alert Messages displayed by the Ship Control Station
- Fault Status - Enter any fault status message observed at the system status display
- LRU Callout - Enter any Line Replaceable Unit (LRU) Callouts
- Additional Diagnostic Indications - Record any additional diagnostic information

BLOCK 13 - SFCC REMOVAL

Craftsman mark as “SAT”, “UNSAT”, or list data required as appropriate for each of the provided blocks.

BLOCK 14 - SFCC INSTALLATION

Craftsman mark as “SAT”, “UNSAT”, or list data required as appropriate for each of the provided blocks.

BLOCK 15 - SFCC RESTORATION

Craftsman mark as “SAT”, “UNSAT”, or “N/A” as appropriate for each of the provided blocks.

BLOCK 16 - OPERATIONAL VERIFICATION

Craftsman mark as “SAT”, “UNSAT”, or “N/A” as appropriate for each of the provided blocks.

BLOCK 17 - SOFTWARE INSTALLATION AND VERIFICATION

Craftsman

• Installation Software Rev - Record the Ship Control System operational software revision level identified in the change vehicle.

• SFCC Software Rev - Record the specific components software revision level. If software is pre-programmed on SFCC, record the software revision level identified on the applicable SFCC Certificate of Conformance.

• VDD Checksum - Record the checksum value identified in the Version Description Document (VDD). Should match Installation Checksum.

• Installation Checksum - Record the checksum as observed during installation. Should match VDD Checksum.

NOTE: IF THE CRAFTSMAN INSTALLING THE MATERIAL IS OTHER THAN THE CRAFTSMAN SIGNING FOR DATA IN BLOCK 7, A CORRESPONDING SIGNATURE, PRINTED NAME AND DATE SHALL BE ENTERED IN THE REMARKS BLOCK 18.

BLOCK 18 - REMARKS

Craftsman or Alteration Installation Team (AIT) Lead will record amplifying information as required or additional space is required, and will sign, print name and date Block 18.

BLOCK 19 - CRAFTSMAN SIGNATURE

Craftsman shall sign this block signifying that the work has been accomplished.

BLOCK 20 - AIT LEADER/INSPECTOR SIGNATURE

(AIT ONLY) The AIT Lead will enter signature, date and badge number for final review, signifying the accuracy of the completed form. If any entry is UNSAT, initiate action to resolve the unsat condition and indicate the action taken in the "Remarks" block. Do not sign unless a satisfactory repair is completed or the UNSAT condition is accepted.

NOTE: (AIT ONLY) WHEN AN AIT LEAD IS NOT REQUIRED, A QUALIFIED ON SITE INSTALLATION COORDINATOR (OSIC), NOT THE OSIC FOR THE JOB, SHALL SIGN WHERE "AIT LEAD" SIGNATURE IS REQUIRED.

(SHIP'S FORCE) INSPECTOR will enter signature, date and badge number for final review, signifying the accuracy of the completed form and witnesses testing associated with Block 16. If any entry is UNSAT, initiate action to resolve the unsat condition and indicate the action taken in the "Remarks" block. Do not sign unless a satisfactory repair is completed or the UNSAT condition is accepted.

BLOCK 21 - RECORD HAS BEEN REVIEWED FOR COMPLETENESS

The OSIC/QAS/QAO shall sign, date and enter badge number for final review, signifying entries are complete and that the data agrees with the listed requirements.

(This Page Intentionally Left Blank)

STUD INSTALLATION RECORD Planning shall fill in blocks identified by a ♦ prior to issuing Page _____ of _____

QA FORM 17SI (6/05)

♦1. SHIP	HULL NO.	♦2. JCN	♦3. LWC/SHOP	♦4. CWP/REC SER NO.	♦5. SYSTEM/COMPONENT/ROTATABLE POOL NO.

6. NEW MATERIAL DESCRIPTION	QTY	LOE	IDENT (E.G., MIC NO/NSN/TRACEABILITY NO.)

♦7. DESCRIPTION OF STUD DATA REQUIREMENTS:

♦JOINT MAPPING DRAWING & REV	♦JOINT NO/JOINT DESCRIPTION	♦REQUIRED STUD DIAMETER AND THREAD SERIES
♦DETAIL DRAWING & REV	♦STUD PIECE NO.	♦REQUIRED STUD LENGTH

♦AUTHORIZED INSTALLATION METHOD: ☐ CLASS 3 FIT: ANAEROBIC THREAD LOCKING COMPOUND ☐ CLASS 5 FIT: INTERFERENCE FIT	♦REQUIRED MIN BREAKAWAY TORQUE OR STUD SETTING TORQUE (List Torque Reference)	♦☐ FT-LB ☐ IN-LB

8. STUD INSTALLATION DOCUMENTATION

♦REQUIRED ANAEROBIC LOCKING COMPOUND: GRADE (Leave blank for class 5 fit)	ACTUAL ANAEROBIC LOCKING COMPOUND: MANUFACTURER & GRADE (Leave blank for class 5 fit)
♦REQUIRED STUD STANDOUT & TOLERANCE	ACTUAL STUD(S) STANDOUT:

9. SKETCH/REMARKS: PROVIDE A SKETCH OF THE FASTENER CIRCLE, SHOWING ALL THE STUDS INSTALLED & ORIENTATION TO COMPONENT: (CRAFTSMAN/QAI SUBMIT A DF TO RESOLVE UNSAT DATA)

CRAFTSMAN SIGNATURE VERIFIES: 1. FASTENER SIZE, LENGTH, AND CLASS OF FIT IS IAW STATED REQUIREMENTS. 2. MINIMUM BREAKAWAY TORQUE OR STUD SETTING TORQUE IS SATISFACTORY. 3. STUD INSTALLATION COMPLIES WITH ALL INSTALLATION REQUIREMENTS. 4. ALL NEW MATERIAL MEETS SPECIFIED REQUIREMENTS, IS INSTALLED & LISTED ABOVE. MATERIAL NOT LISTED AS NEW, IS EXISTING AND IS ACCEPTABLE FOR RE-USE & IS INSTALLED.	10. CRAFTSMAN SIGNATURE/BADGE NO. DATE

11. QAI/SHOP SUPERVISOR SIGNATURE /BADGE NO. (RECORD REVIEWED FOR FINAL ACCEPTANCE)	DATE

12. QAS SIGNATURE/BADGE NO. (RECORDS HAVE BEEN REVIEWED FOR COMPLETENESS)	DATE

(This Page Intentionally Left Blank)

QA FORM 17SI INSTRUCTIONS

STUD INSTALLATION RECORD

PURPOSE: To document the proper OQE for installing Level One studs in a SOC, SUBSAFE or Level One application when directed by the work procedure.

PROCEDURE: The numbered blocks on QA form 17SI correspond with the instructions listed below. Blocks marked with a ♦ shall be completed by the planner prior to issue.

BLOCK 1 - SHIP HULL NO.

Enter the ship's name and hull number.

BLOCK 2 - JCN

Enter the JCN.

BLOCK 3 - LWC

Enter the shop number of the LWC.

BLOCK 4 - CWP/REC SERIAL NO.

Enter the CWP/REC serial number or enter N/A if no CWP/REC is required. Do not list the CWP/REC revision.

BLOCK 5 - SYSTEM/COMPONENT

Enter the noun name of the system and component being repaired. (e.g., MSW-25 Hull Insert). If the record is for in-shop repair/manufacture of rotatable pool item, enter the serial number of the item.

BLOCK 6 - NEW MATERIAL DESCRIPTION

NOTE: THE CRAFTSMAN SHALL COMPLETE ALL SECTIONS OF BLOCK 6.

MATERIAL DESCRIPTION

Enter a description of the new studs installed in the joint. Include diameter, thread, and length (e.g., Stud, 5/8”-11x3”).

QTY - Record the quantity of the new studs installed.

LOE - Enter the Level of Essentiality as “I” or “NA” as appropriate.

IDENTIFICATION/MIC/TRACEABILITY NO.

Document the markings from the fastener to include either:

(1) The color code and the heat/lot number, material type and manufacturer’s symbol (for nuts containing a self-locking insert, the color of the insert is the manufacturer’s symbol).

(2) The MIC number (when MIC number is on the fastener or on the individual tag for some small fasteners).

BLOCK 7 - DESCRIPTION OF STUD DATA REQUIREMENTS

NOTE: THE PLANNER SHALL COMPLETE ALL SECTIONS OF BLOCK 7.

JOINT MAPPING DRAWING & REV

Enter the joint mapping drawing and revision. Enter NA when no mapping drawing exists.

JOINT NO/JOINT DESCRIPTION

Enter the joint number if applicable or clearly describe the installation location. If joint numbers are assigned via a sketch in the TWD, identify the sketch enclosure number and TWD number.

REQUIRED STUD DIAMETER & THREAD SERIES

Enter the required diameter and thread series of the replacement stud.

DETAIL DRAWING & REV

Enter the detailed drawing and revision number. For original issue (non revised) drawings, enter a dash (-). Include vendor name for vendor drawings. Revisions for Technical Manuals are not required.

STUD PIECE NO.

Enter the detailed drawing pertaining to the stud.

REQUIRED STUD LENGTH

Enter the required length of the stud.

REQUIRED CLASS OF FIT AUTHORIZED INSTALLATION METHOD

Mark the appropriate block for the required class of fit.

TORQUE REFERENCE

Enter the source for the torque value (e.g., NAVSEA S9505-AM-GYD-010, SAE J2270, drawing, MS, etc.).

REQUIRED MIN BREAKAWAY TORQUE OR STUD SETTING TORQUE

Enter the required minimum breakaway torque, the tolerance or range, and mark the appropriate torque units box (ft-lb or in-lb).

BLOCK 8 - STUD INSTALLATION DOCUMENTATION

REQUIRED ANAEROBIC LOCKING COMPOUND: GRADE

Planner enter the required grade of anaerobic locking compound. Leave blank for Class 5 installation method.

ACTUAL ANAEROBIC LOCKING COMPOUND MANUFACTURER & GRADE

Record the manufacturer and grade of the thread locking compound used. Leave blank for Class 5 installation method.

REQUIRED STUD STANDOUT & TOLERANCE

Enter the required stud standout and tolerance.

ACTUAL STUD(S) STANDOUT

Record the actual stud standout for each new or reset existing stud.

BLOCK 9 - SKETCH/REMARKS

Provide a sketch of the fastener circle, showing all the newly installed and all re-installed existing studs and their orientation to the component.

BLOCK 10 - CRAFTSMAN SIGNATURE/BADGE NO./DATE

Craftsman print name, enter signature, badge number and date after completing Blocks 6, 8 and 9. Do not sign Block 10 unless signing for satisfactory results. If unsat, the craftsman will report the unsat condition and document the rework on the applicable QA form. If only one fastener is unsat, the craftsman may sign for completing the installation of the remaining studs but must clearly annotate in Block 9 the location of the stud and reason for the unsatisfactory condition.

Craftsman signature signifies the following:

- Fastener size, length, and class of fit are per the stated requirements
- Minimum breakaway torque or stud setting or stud setting torque (as applicable) is satisfactory
- Stud installation complies with all installation requirements
- All new material meets specified requirements, is installed and listed in Block 6
- Material not listed as new is existing, and is acceptable for re-use and is installed

BLOCK 11 - QAI/SHOP SUPERVISOR SIGNATURE/BADGE NO./DATE

NOTE: REQUIRED FOR SOC, SUBSAFE AND LEVEL I COMPONENTS ONLY.

Inspector/shop supervisor print name, enter signature, badge number and date certifying the accuracy of the data recorded in Block 6, 8 and 9. This signature is only required for SOC, SUBSAFE and Level I components.

BLOCK 12 - RECORDS HAVE BEEN REVIEWED FOR COMPLETENESS

QAS or QAO will print name, enter signature, badge number and date for final review, signifying the accuracy of the completed form for SUBSAFE/SOC items only. For other components, the Work Center supervisor shall sign and date the form signifying the accuracy of the completed form.

(This Page Intentionally Left Blank)

HANDLING EQUIPMENT TEST RECORD

QA FORM 17W (Front) For CWPs, planning shall fill in blocks identified by a ♦ prior to issuing
Page____ of ____

♦1. SHIP HULL NO.	♦2. JCN	♦3. LWC/SHOP	♦4. CWP/REC SER NO.
♦5. Equipment Description:			
♦6. Log I.D. Number:	♦7. Manufacturer or Local Serial Number (Hull No.- Work Center-Number):		
♦8. NAVSEA Drawing Number/Revision used for Test:			
♦9. Safe Working Load (SWL) in pounds:	♦10. Dynamic Test Load (DTL) in pounds:		
♦11. Static Test Load (STL) in pounds:	♦12. STL Frequency in months:		

13a. Test Type	13b. Testing Activity	13c. Test Activity Witness	13d. Quality Assurance
Action		Signature	Signature
Date		Print Name	Print Name
Action		Signature	Signature
Date		Print Name	Print Name
Action		Signature	Signature
Date		Print Name	Print Name
Action		Signature	Signature
Date		Print Name	Print Name
Action		Signature	Signature
Date		Print Name	Print Name

14. Remarks:

HANDLING EQUIPMENT TEST RECORD
QA FORM 17W (Back) FIGURE 1

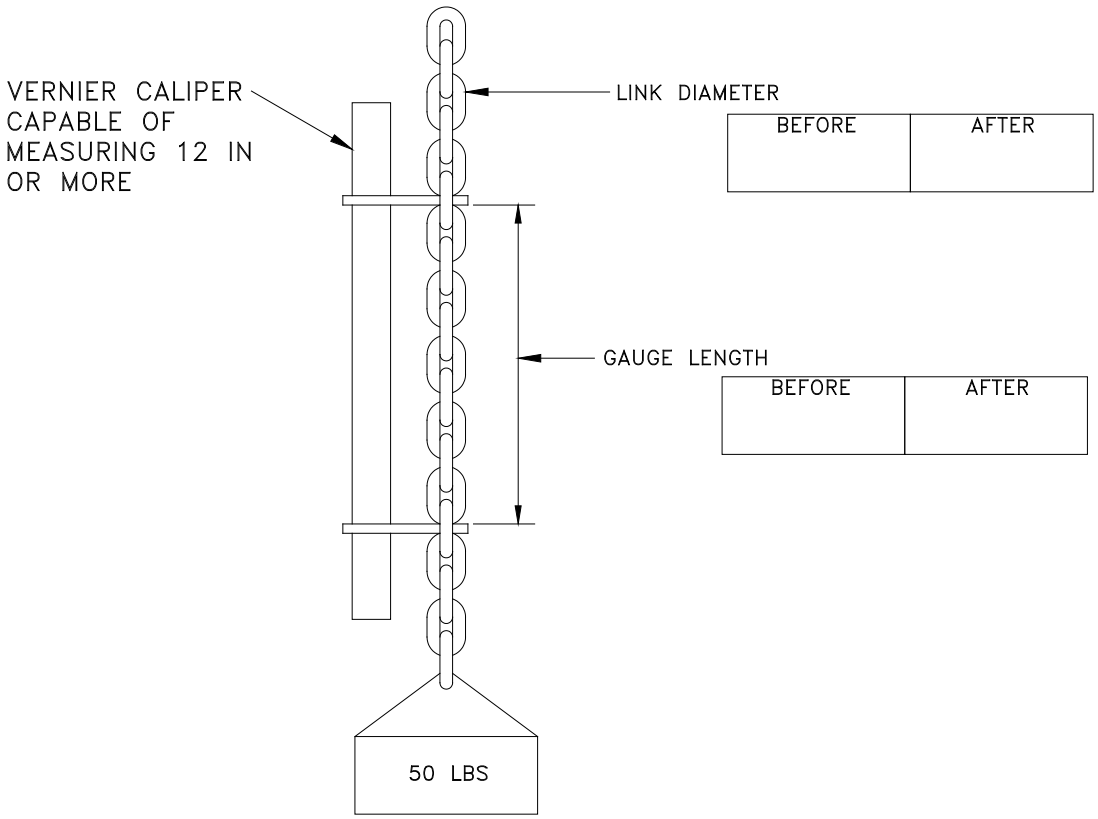

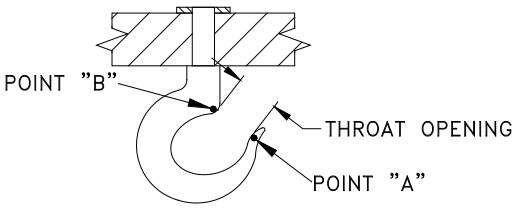

THROAT OPENING

	BEFORE	AFTER
TOP		
BOTTOM		

POINT A AND B

BEFORE	AFTER

QA FORM 17W INSTRUCTIONS

HANDLING EQUIPMENT TEST RECORD INSTRUCTIONS

PURPOSE: To provide a report form for work, tests and inspections not covered by other QA forms. This form can be used for handling equipment weight testing except cranes and strategic weapons handling equipment.

PROCEDURE: The numbered blocks on QA form 17W correspond with the instructions listed below. When this form is used to certify manufacture or repair of handling equipment, the planning organization shall fill in Blocks 1 through 11 (identified by a ♦) prior to issuing a procedure requiring use of this form. When this form is used to perform periodic handling equipment testing, the weight test supervisor/shop supervisor shall fill in Blocks 1 through 12 (identified by a ♦) prior to performing testing.

BLOCK 1 - SHIP HULL NO.

Enter the ship's name and hull number.

BLOCK 2 - JCN

Enter the JCN.

BLOCK 3 - LWC/SHOP

Enter the shop number of the LWC.

BLOCK 4 - CWP/REC SERIAL NO.

Enter the CWP serial number or enter NA if no CWP/REC is required. Do not list the CWP/REC revision.

BLOCK 5 - EQUIPMENT DESCRIPTION

Enter the name and a readily understood description of the equipment or component name from the TLMD. If the equipment is permanently installed (e.g., a monorail or padeye, etc.), enter the compartment location, (e.g., torpedo room, port, overhead, and frame 21.)

BLOCK 6 - LOG I.D. NUMBER

Enter log identification number from the Test Load Methods Drawing (TLMD) when applicable.

BLOCK 7 - MANUFACTURER OR LOCAL SERIAL NUMBER

Enter the manufacturer or Local Serial Number when applicable (i.e., Hull No. - Work Center - Number).

BLOCK 8 - NAVSEA DRAWING NUMBER/REVISION

Enter NAVSEA drawing number and revision for drawing used to conduct the test.

BLOCK 9 - SAFE WORKING LOAD (SWL)

Enter the item's Safe Working Load (SWL), in pounds, from the TLMD.

NOTE: LIST THE SWL FOR BOTH THE SHORT AND LONG POSITIONS FOR LOADING POLES.

BLOCK 10 - DYNAMIC TEST LOAD (DTL)

Enter the item's Dynamic Test Load (DTL), in pounds, from the TLMD.

BLOCK 11 - STATIC TEST LOAD (STL)

Enter the item's Static Test Load (STL), in pounds, from the TLMD.

BLOCK 12 - STL FREQUENCY

Enter the frequency required for the static test in months.

NOTE: STRATEGIC WEAPONS HANDLING EQUIPMENT COVERED UNDER THE PREVENTIVE MAINTENANCE MATERIAL PROGRAM (PMMP) DOES NOT REQUIRE A QA FORM 17W. EQUIPMENT NOT COVERED UNDER THE PMMP MUST MEET THE REQUIREMENTS OF THIS MANUAL.

BLOCK 13 - TEST TYPE

Enter the test date, the action taken (e.g., STL, DTL, MT, VT, tension, compression, short/long for loading poles) and the name or hull number of the testing facility. Print the name (e.g., first name, middle initial and last name) of the test facility witness. The test facility witness shall then sign the block above the name. If test facility witness signature and/or QA signature cannot be obtained, the source document bearing that signature will be obtained and retained in the weapons handling test record log. Only the latest source document applicable to any particular piece of equipment/component need be retained.

BLOCK 14 - REMARKS

(Craftsman/QAI/QAS/Planning) Enter any pertinent remarks or additional information related to the repair/assembly of the component. Each entry shall contain signature, badge number and date except where the entry is pre-printed on the form by Planning.

FIGURE 1 Record measurement in blocks provided on the back of the QA form 17W when applicable.

a. Hook throat opening measurements and tram point pre/post test measurements when new, or as first recorded, per NSTM 700 or PMS.

b. Length and link diameters of hoist load chains when new, or as first recorded, per NSTM 700 or PMS.

SILVER BRAZE FABRICATION & INSPECTION RECORD PAGE **1** OF

QA FORM 18 **(NEW 09/05)** (Work planning to fill in blocks/evaluate block options identified by a ♦ prior to release)

♦1. SHIP ♦HULL NO.	♦2. JCN	♦3. LWC/SHOP	♦4. CWP/REC SER NO.	♦5. SYSTEM/COMPONENT

♦6. PURPOSE: ☐ PRODUCTION ☐ QUAL ☐ RE-QUAL ☐ MAINTENANCE OF QUAL	♦7. INSTALLATION DWG.	♦8. JOINT ID/DESCRIPTION

♦9. JOB DESCRIPTION	♦10. MAP JOINT DWG	♦11. ☐ P-3A SPECIAL ☐ P-3A ☐ P-3B

♦12. BRAZE PROC.	♦13. BRAZE PROCESS ☐ H101 ☐ H103 ☐ NA	14. JOINT DESIGN ☐ SOCKET ☐ SLEEVE ☐ DOUBLE INSERT ☐ FACE FEED ☐ EQUAL LAND ☐ SINGLE INSERT ☐ UNEQUAL LAND	15. ACCESS ☐ RESTRICTED (<4") ☐ UNRESTRICTED	16. ☐ ORIGINAL ☐ REPAIR (1) ☐ REPAIR (2)

17. FITTING, PIPE, AND TUBE MATERIALS

♦DWG PC NO.	♦SIZE	THICKNESS	♦MIL-SPEC	♦P-NUMBER	♦NEW OR EXIST	IDENT (E.G., MIC NO./NSN/TRACEABILITY NO.)
					☐ NEW ☐ EXISTING	
					☐ NEW ☐ EXISTING	

18. LAND WIDTH	PIPE	FITTING	CENTER	SOCKET DEPTH	19. FLUX	♦ ☐ MINIMUM FLUX FED SPEC O-F-499: ☐ TYPE A ☐ TYPE B

20. BRAZE ALLOY	MIL-SPEC	F- NUMBER	GRADE	IDENT (E.G., MIC NO./NSN/TRACEABILITY NO.)
INSERT RING				
ROD				

JOINT DATA IS CORRECT, JOINT AND MATERIAL MEETS SPECIFIED REQUIREMENTS	21. CRAFTSMAN SIGNATURE/BADGE	DATE

22. INSPECTION TYPE		23. ACCEPT	24. REJECT	25. SIGNATURE (Inspector/Craftsman)	BADGE NO.	DATE
NDT EXISTING PPG ☐ NOT REQD	☐ VT5X ☐ PT					
NDT EXISTING FTG ☐ NOT REQD	☐ VT5X ☐ PT					
DIAMETRICAL CLEARANCE						
FIT UP INSPECTION						
ALLOY DRAW						
EVIDENCE OF ALLOY						
BOTTOM CLEARANCE						

26. BRAZED POSITION ☐VERT ☐HORZ	**BRAZING REQUIREMENTS ARE SATISFACTORY**	27. BRAZER SIGNATURE/BADGE NO.	DATE

♦28. ☐ **NO. UT INSPECTION REQUIRED** (NON P-3 A SPECIAL)	NDT PROCEDURE NO.	ACCEPTANCE STANDARD: NAVSEA 0900-LP-001-7000

29. SCANNING METHOD ☐ STATIC ☐ CONTINUOUS	30. EQUIPMENT MFG.	MODEL	SERIAL NO.	CAL DUE DATE

31. TRANSDUCER MFG.	SIZE	SERIAL NO.	FREQUENCY	32. COUPLANT TYPE

33. LAND	1	2	3	4	5	6	7	8	9	10	11	12	13	14	TOT.	AVG.
PPG																
MID																
FTG																

34. TOTAL % BOND	35. DISPOSITION ☐ ACCEPT ☐ REJECT	36. UT INSPECTOR/BADGE	DATE

37. REMARKS **(SHOP REMARKS ALSO)**

FINAL DISPOSITION	38. SUPERVISOR (Signature/Badge/Date)	39. WCS (QAS For SUBSAFE/SOC Only) (Signature/Badge/Date)

(This Page Intentionally Left Blank)

QA FORM 18 INSTRUCTIONS

SILVER BRAZE FABRICATION AND INSPECTION RECORD

PURPOSE: To provide a standard form for documenting OQE for a silver brazed joint.

PROCEDURE: The numbered blocks on QA form 18 correspond with the instructions listed below. The planner preparing the work procedure will complete blocks identified with the diamond symbol. The craftsman will complete blocks without the diamond symbol. The NDT Supervisor will verify the completed form and sign in Block 38. A QA form 18A will be attached to this form to complete each brazed joint record.

NOTE: BLOCKS 13, 17, P-NUMBER, 20, F-NUMBER, AND 26 ARE FOR QUALIFICATION USE ONLY AND ARE NOT REQUIRED FOR PRODUCTION BRAZES.

PAGE OF Enter the page number, starting with page 1, of total number of QA forms 18 and 18A associated with the joint (e.g., 1 of 2, 1 of 3).

BLOCK 1 - SHIP HULL NO.

Enter the tended ship's name and hull number.

BLOCK 2 - JCN

Enter the JCN.

BLOCK 3 - LWC/SHOP

Enter the shop number for the LWC.

BLOCK 4 - CWP/REC SER NO.

Enter the CWP/REC serial number or enter N/A if no CWP/REC is required. Do not list the CWP/REC revision.

BLOCK 5 - SYSTEM/COMPONENT

Enter the system/component noun name.

BLOCK 6 - PURPOSE

Check appropriate block.

BLOCK 7 - INSTALLATION DRAWING

Enter the installation drawing number and revision.

BLOCK 8 - JOINT ID/DESCRIPTION

Enter the map joint number from the applicable plan (Block 10). If not a mapped joint, assign a local unique joint ID number or enter a description of the joint.

BLOCK 9 - JOB DESCRIPTION

Enter a brief statement describing the work.

BLOCK 10 - MAP JOINT DWG

Enter ship's plan number and revision, which show and identify the map number of the joint being brazed or enter "NA" if there isn't a map drawing.

BLOCK 11 - P-3A SPECIAL/P-3A/P 3B

Enter an "X" in the appropriate box.

BLOCK 12 - BRAZE PROCEDURE

Enter the braze procedure used, including revision and change.

BLOCK 13 - BRAZE PROCESS

Enter an "X" in the appropriate block per NAVSEA 0900-LP-001-7000.

BLOCK 14 - JOINT DESIGN

Enter an "X" in the appropriate boxes.

BLOCK 15 - ACCESS

Enter an "X" in the appropriate box.

BLOCK 16 - ORIGINAL/REPAIR

Enter an "X" in the appropriate box.

BLOCK 17 - FITTING, PIPE AND TUBE MATERIALS

a. Enter the fitting piece and pipe/tube piece number from the installation drawing (Block 7) or NA if not available.

b. Enter the size of the fitting and pipe/tube (e.g., 1/2 Normal Pipe Size (NPS)).

c. Enter the thickness (.127 inches).

d. Enter the actual thickness (minimum value) of the fitting and pipe/tube.

e. Enter the material specification of the component (from Table 4-4 of NAVSEA 0900-LP-001-7000), when known. If existing, enter "existing".

f. For qualification purposes, enter the applicable P-number from Table 4-4 of NAVSEA 0900-LP-001-7000.

g. Enter an "X" in the appropriate New/Exist box.

h. Enter the material marking of the component. Enter the MIC Number for new level I material installed or N/A. Enter other material markings if material is not required to be level I and marking is present. If fitting is existing and is not marked, an acid check when required by the TWD to ensure generic material is correct shall be accomplished and documented in remarks block.

BLOCK 18 - LAND WIDTH

Enter the land width or socket depth for fittings without inserts. N/A blocks that are not applicable.

BLOCK 19 - FLUX

a. Enter an "X" if minimum flux technique was used.

b. Enter an "X" for flux type per FED-SPEC O-F-499.

BLOCK 20 - BRAZE ALLOY

Enter the Mil-Spec and the alloy grade. Enter the MIC Number when new level I brazing material is installed in a Level I application or enter "NA" for non-level applications when material is not required to be level I.

BLOCK 21 - JOINT DATA IS CORRECT/CRAFTSMAN SIGNATURE

Verify data entered is correct and actual material to be used/installed is as specified. Sign name, enter date and badge number to certify information is correct.

BLOCK 22 - INSPECTION TYPE

a. Mark the appropriate type of inspection.

b. Diametrical Clearance – Enter the actual measurement. Acceptance criteria is per Table 5.2 of NAVSEA 0900-LP-001-7000.

c. Fit up Inspection-Acceptance criteria of paragraph 7.2.1.a of NAVSEA 0900-LP-001-7000.

d. Alloy Draw-Acceptance criteria per paragraph 7.2.1.d of NAVSEA 0900-LP-001-7000.

e. Evidence of Alloy-Acceptance criteria per paragraph 7.2.1.e of NAVSEA 0900-LP-001-7000.

f. Clearance Acceptance criteria per paragraph 7.2.1.f of NAVSEA 0900-LP-001-7000.

BLOCK 23/24 - ACCEPT/REJECT

Mark the appropriate column.

BLOCK 25 - SIGNATURE

Enter the signature, badge number and date.

BLOCK 26 - BRAZED POSITION

Mark the appropriate block for position brazing performed.

BLOCK 27 - BRAZE PROCEDURE IS SATISFACTORY

Brazer sign name and enter Brazer badge number and date to certify all joint information is correct.

BLOCK 28 - NDT REQUIREMENTS

a. Enter an "X" if Ultrasonic Testing (UT) is not required.

b. Enter the NDT procedure number.

BLOCK 29 - SCANNING METHOD

Enter an "X" in the appropriate box.

BLOCK 30 - EQUIPMENT MANUFACTURER

Enter Equipment Manufacture Name, Model, Serial number and calibration Due Date of Equipment.

BLOCK 31 - TRANSDUCER MANUFACTURER

Enter Equipment Manufacture Name, Size, Serial number, and Frequency of Equipment.

BLOCK 32 - COUPLANT TYPE

Enter the name of the fluid used.

BLOCK 33 - LAND/PIPE/MID/FTG

Enter the percent of bond for the various segments of the lands. Enter NA as applicable. Enter the total for all segments used and the average percent bond for the lands (or passes of a non insert fitting).

BLOCK 34 - TOTAL % BOND

Calculate and enter the total % bond for the joint.

BLOCK 35 - DISPOSITION

Enter an "X" in the appropriate box to accept or reject the joint.

BLOCK 36 - INSPECTOR/BADGE/DATE

UT inspector will sign, enter badge number and date, signifying the technical accuracy of the data recorded and acceptance/rejection of the joint.

BLOCK 37 - REMARKS

Enter any additional information.

BLOCK 38 - FINAL DISPOSITION/SUPERVISOR

NDT Supervisor enter signature, badge number and date signifying the joint is satisfactory and that all data on the form is completed satisfactorily.

BLOCK 39 - FINAL DISPOSITION/RECORD HAS BEEN REVIEWED FOR COMPLETENESS/QAS

QAS or QAO will print name, enter signature and date for final review, signifying the accuracy of the completed form for SUBSAFE/SOC items only. For other components, the Work Center supervisor shall sign and date the form signifying the accuracy of the completed form.

ULTRASONIC INSPECTION RECORD

QA FORM 18A PAGE OF

2. SHIP HULL	3. JCN	4. LWC/SHOP	5. CWP/REC SERIAL NO.

ULTRASONIC EQUIPMENT AND INSPECTION DATA

6. EQUIPMENT MANUFACTURER	7. MODEL NO.	8. SERIAL NO.	9. TRANSDUCER MANUF.	10. SIZE/FREQ	11. SERIAL NO.
12. SCANNING METHOD [ ] STATIC [ ] CONTINUOUS	13. COUPLANT TYPE	14. CAL EXP DATE	15. JOINT ID NO.		16. DWG NO.
17. REMARKS/NOTES					

18. LAND%	1	2	3	4	5	6	7	8	9	10	11	12	TOTAL	TOTAL BOND
PIPE														
MIDDLE														
FITTING														

19. DISPOSITION [ ] ACCEPT [ ] REJECT	20. TOTAL % BOND	21. INSPECTOR/DATE

ULTRASONIC EQUIPMENT AND INSPECTION DATA

6. EQUIPMENT MANUFACTURER	7. MODEL NO.	8. SERIAL NO.	9. TRANSDUCER MANUF.	10. SIZE/FREQ	11. SERIAL NO.
12. SCANNING METHOD [ ] STATIC [ ] CONTINUOUS	13. COUPLANT TYPE	14. CAL EXP DATE	15. JOINT ID NO.		16. DWG NO.
17. REMARKS/NOTES					

18. LAND%	1	2	3	4	5	6	7	8	9	10	11	12	TOTAL	TOTAL BOND
PIPE														
MIDDLE														
FITTING														

19. DISPOSITION [ ] ACCEPT [ ] REJECT	20. TOTAL % BOND	21. INSPECTOR/DATE

NOTES:

1. INCREMENTS FOR WHICH NO ULTRASONIC READING CAN BE OBTAINED WILL BE MARKED AS FOLLOWS:
   "X" - INCREMENTS THAT ARE INACCESSIBLE DUE TO FITTING CONFIGURATION.
   "NA" - INCREMENTS THAT ARE INACCESSIBLE DUE TO PIPING CONFIGURATION OR LOCATION.
   "NP" - INCREMENTS IN WHICH THERE IS NO ULTRASONIC PENETRATION.
2. INCREMENTS OF THE ABOVE TYPE WILL BE ASSIGNED PERCENT BOND VALUES AS FOLLOWS:
   "NA" = 0% BOND.
   "NP" AND "X" = INCREMENTS UP TO A TOTAL LENGTH NOT EXCEEDING 20% OF THE CIRCUMFERENCE OF THE LAND WILL BE ASSIGNED A % BOND VALUE EQUAL TO THAT OF THE LOWEST READABLE INCREMENTS ADJACENT TO THE "X" OR "NP" INCREMENTS OR 60% WHICHEVER IS THE LEAST. "X" AND "NP" INCREMENTS IN EXCESS OF 20% OF CIRCUMFERENCE WILL BE ASSIGNED A BOND VALUE OF 0%. THE INSPECTOR MAY AT HIS/HER DISCRETION, SHIFT THE INCREMENTAL SCALE SO THAT THE MINIMUM NUMBER OF INCREMENTS CONTAIN "X", "NP" OR "NA" VALUES.

(This Page Intentionally Left Blank)

QA FORM 18A INSTRUCTIONS

ULTRASONIC INSPECTION RECORD

PURPOSE: To supplement the QA form 18 to document UT inspection date, equipment used, and acceptability of UT results.

PROCEDURE: QA form 18A will be completed by the planner and/or UT NDT Inspector. The numbered blocks on QA form 18A correspond with the instructions listed below.

BLOCK 1 - PAGE OF

Enter the page number, starting with page 2, of total number of QA forms 18A associated with the joint (e.g., 2 of 3, 3 of 3). The associated QA form 18 is always page 1 of __.

BLOCK 2 - SHIP HULL NO.

Enter the tended ship's name and hull number.

BLOCK 3 - JCN

Enter the JCN.

BLOCK 4 - LWC/SHOP

Enter the LWC/Shop.

BLOCK 5 - CWP/REC SERIAL NO.

Enter the CWP/REC serial number or enter N/A if no CWP/REC is required. Do not list the CWP/REC revision.

BLOCKS 6-11 - EQUIPMENT MANUFACTURER/MODEL NO./SERIAL NO./TRANSDUCER MANUFACTURER/SIZE/FREQUENCY/SERIAL NO.

Enter the information for the equipment used to conduct the inspection.

BLOCK 12 - SCANNING METHOD

Place an "X" in the appropriate box.

BLOCK 13 - COUPLANT TYPE

Enter the name of fluid used.

BLOCK 14 - CAL EXP DATE

Enter the calibration expiration date of the equipment listed in Blocks 6-11.

BLOCK 15 - JOINT ID NO.

Enter the JID of the joint being UT inspected. If it is a qualification joint and not an actual production joint, enter the individual's name performing the qualification.

BLOCK 16 - DWG. NO.

Enter the number of the drawing or plan that identifies the joint listed in Block 15 if a production braze.

BLOCK 17 - REMARKS/NOTES

Enter any applicable remarks or notes.

BLOCK 18 - LAND/PIPE/MIDDLE/FITTING

Enter the various segments of the lands, enter % bond, X, NA or NP as applicable. Enter the total for all segments used and the average percent bond for the lands (or passes of a no-insert fitting).

BLOCK 19 - DISPOSITION

Place an "X" in the appropriate box to accept or reject the joint.

BLOCK 20 - TOTAL % BOND

Calculate and enter the total % bond for the joint.

BLOCK 21 - INSPECTOR/DATE

NDT Inspector print name, enter signature and date, signifying the technical accuracy of the data recorded and acceptance/rejection of the joint.

WELDING IN PROCESS CONTROL/NONDESTRUCTIVE TEST RECORD

QA FORM 20 (FRONT) ◆PAGE 1 OF

When the form is used for production welding, the blocks marked with a ◆ shall be completed by the planner.

◆2. SHIP HULL NO.	◆3. JCN	◆4. CWP/REC SER. NO.	◆5. LWC	◆6. DATE
◆7. SYSTEM	◆8. COMPONENT	◆9. DWG NO.	◆10. CWP STEP NO.	

◆11. JOINT ID	◆12. JOINT DESIGN	13. INST LOCATION: [ ] STBD COMPT: [ ] C/L FR: [ ] PORT	14. WELDED LOCATION: [ ] SHOP [ ] FIELD

BASE MATERIAL DATA

15. COMP DATA	16. MATERIAL	17. SIZE	18. THICKNESS	19. MATL SPEC	20. MIC NO.
COMPONENT A:					
COMPONENT B:					
21. [ ] SEAL RING [ ] BACK RING/STRIP	22. MATERIAL	23. SIZE	24. THICKNESS	25. MATL SPEC	26. MIC NO.

WELDING MATERIAL SPECIFICATIONS AND DATA

27. TYPE OF FILLER(S)	28. SIZE	29. MATL	30. MIL-SPEC	31. MIC NO.

WELD HISTORY

◆32. WELDING STANDARD:	33. WELDING PROCEDURE:	34. DATA SHEET	35. POSITION: [ ] VERT [ ] FLAT [ ] FIXED [ ] 45 DEG [ ] HORZ [ ] OVHD [ ] ROLLED

36. ACCESSIBILITY: [ ] 12"OR LESS [ ] UNRESTRICTED	37. PREHEAT TEMP	38. PREHEAT METHOD	39. POST HEAT. START TIME: TEMP REQD: STOP TIME:

40. PURGE GAS:	41. FLOW RATE	42. SHIELD GAS	43. FLOW RATE	44. CUP SIZE	45. TUNGSTEN SIZE

46. WELD LAYER	47. PROCESS	48. QUAL EXP DATE	49. AMPS	50. INTERPASS TEMP	51. WELDER SIGNATURE	52. DATE

53. INSPECTION DATA CONTAINED ON REVERSE OF THIS PAGE

REMARKS:

91. FINAL DISPOSITION: [ ] ACCEPT [ ] REJECT	92. NDT SUPERVISOR DATE

THE PERSON DESIGNATED TO SIGN FOR AN ACTION VERIFIES, BASED ON PERSONAL OBSERVATION OR CERTIFIED RECORDS, AND CERTIFIES BY HIS/HER SIGNATURE THAT THE ACTION HAS BEEN PERFORMED IN ACCORDANCE WITH THE SPECIFIED REQUIREMENTS.

WELDING IN PROCESS CONTROL/NONDESTRUCTIVE TEST RECORD
QA FORM 20 (BACK)

NDT INSPECTION DATA					
54. INSPECTION STANDARD		55. WELD CLASS	56. ACCEPTANCE STANDARD	57. ACCEPT CLASS	
58. WELD PREP	59. INSP METHOD	60. ACCEPT/REJECT	61. NDT INSPECTOR SIGNATURE		62. DATE
COMPONENT A		[ ] ACCEPT [ ] REJECT			
COMPONENT B		[ ] ACCEPT [ ] REJECT			
63. JOINT FITUP		[ ] ACCEPT [ ] REJECT			
64. INSP LAYER	65. INSP METHOD	66. INSP PROC NO	67. ACCEPT/REJECT	68. NDT INSPECTOR SIGNATURE	69. DATE
			[ ] ACCEPT [ ] REJECT		
			[ ] ACCEPT [ ] REJECT		
			[ ] ACCEPT [ ] REJECT		
			[ ] ACCEPT [ ] REJECT		
			[ ] ACCEPT [ ] REJECT		
NDT INSPECTION DATA REPAIR NO._____					
70. INSP LAYER	71. INSP METHOD	72. INSP PROC NO.	73. ACCEPT/REJECT	74. NDT INSPECTOR SIGNATURE	75. DATE
			[ ] ACCEPT [ ] REJECT		
			[ ] ACCEPT [ ] REJECT		
NDT INSPECTION DATA REPAIR NO._____					
76. INSP LAYER	77. INSP METHOD	78. INSP PROC NO.	79. ACCEPT/REJECT	80. NDT INSPECTOR SIGNATURE	81. DATE
			[ ] ACCEPT [ ] REJECT		
			[ ] ACCEPT [ ] REJECT		
NDT INSPECTION DATA REPAIR NO._____					
82. INSP LAYER	83. INSP METHOD	84. INSP PROC NO.	85. ACCEPT/REJECT	86. NDT INSPECTOR SIGNATURE	87. DATE
			[ ] ACCEPT [ ] REJECT		
			[ ] ACCEPT [ ] REJECT		

88. L W D	89. L W D	90. L W D
REPAIR NO.	REPAIR NO.	REPAIR NO.

53. REMARKS (Continued):

THE PERSON DESIGNATED TO SIGN FOR AN ACTION VERIFIES, BASED ON PERSONAL OBSERVATION OR CERTIFIED RECORDS, AND CERTIFIES BY HIS/HER SIGNATURE THAT THE ACTION HAS BEEN PERFORMED IN ACCORDANCE WITH THE SPECIFIED REQUIREMENTS.

QA FORM 20 INSTRUCTIONS

WELDING IN PROCESS CONTROL/NONDESTRUCTIVE TEST RECORD

PURPOSE: To document in process controls for welding and NDT of a completed weld.

PROCEDURE:

1. QA form 20 will be completed by the planner preparing the CWP, welder and NDT Inspector(s) observing or performing tests.

2. The numbered blocks on QA form 20 correspond to the instructions listed below. When the form is used for production welding, the blocks marked with a ◆ shall be completed by the planner.

BLOCK 1 - PAGE 1 OF

Enter the page number, starting with page 1, of total number of QA forms 20 and 20A, if used, associated with the joint (e.g., 1 of 3, 1 of 2).

BLOCK 2 - SHIP HULL NO.

Enter the ship's name and hull number.

BLOCK 3 - JCN

Enter the JCN.

BLOCK 4 - CWP/REC SER. NO.

Enter the CWP/REC Serial Number or enter N/A if no CWP/REC is required. Do not list the CWP/REC revision.

BLOCK 5 - LWC

Enter the shop number of the LWC.

BLOCK 6 - DATE

Enter the date this form is initiated.

BLOCK 7 - SYSTEM

Enter the noun name of the system.

BLOCK 8 - COMPONENT

Enter the noun name of component.

BLOCK 9 - DWG NO.

Enter the JID or mapping drawing, if applicable. If not applicable, the planner will enter the applicable arrangement drawing, system diagram, or component drawing number, or locally prepared JID sketch.

BLOCK 10 - CWP STEP NO.

Enter the appropriate step number(s) of the CWP.

BLOCK 11 - JOINT ID

Enter the JID from the joint identification or map plan if JID is unavailable, assign local JID. If for a qualification joint (and not production joint identification) enter individual name performing the qualification.

BLOCK 12 - JOINT DESIGN

Enter the joint design (e.g., P-73, PN-1A, P-14, PN-7) to be used.

BLOCK 13 - INST LOCATION

Enter the compartment, frame number, and check port, starboard, or centerline where the component is located.

BLOCK 14 - WELDED LOCATION

Check the appropriate block.

BLOCK 15 - COMPONENT A/B

Enter the component name (e.g., pipe, valve).

BLOCK 16 - MATERIAL

Enter the material type (e.g., CUNI, CRES).

BLOCK 17 - SIZE

Enter the iron pipe size/NPS.

BLOCK 18 - THICKNESS

For nuclear welds, enter the design material thickness. For non-nuclear welds, enter the nominal thickness or the actual measured thickness, if taken, for determining penetrameter selection for radiographed piping joints in accordance with NAVSEA T9074-AD-GIB-010/271, NAVSEA S9074-AR-GIB-010/278, and NAVSEA T9074-AD-GIB-010/1688 and for determining fillet legs on partial penetration welds in accordance with NAVSEA T9074-AD-GIB-010/271, NAVSEA T9074-AD-GIB-010/1688 and MIL-STD-1689 (for Surface Ships only).

BLOCK 19 - MATL SPEC

Enter the appropriate material specification for the material.

BLOCK 20 - MIC NO.

Enter the MIC number for component A and B, if applicable. Verify the MIC number from the QA form 2 for new material. For existing material, if the required MIC number is not readable enter "existing".

BLOCK 21 - [ ] SEAL RING [ ] BACK RING/STRIP

Check the appropriate block for the type of backing.

BLOCK 22 - MATERIAL

Enter the material type (e.g., CUNI, CRES).

BLOCK 23 - SIZE

Enter the ring size.

BLOCK 24 - THICKNESS

Enter the actual measured thickness of the ring or strip.

BLOCK 25 - MIL-SPEC

Enter the appropriate MIL-SPEC for the ring or strip.

BLOCK 26 - MIC NO.

Enter the MIC number of the ring or strip, if applicable. Verify the number from the QA form 2.

BLOCK 27 - TYPE OF FILLER(S)

Enter the type of the filler material(s) used (e.g., 9010, 11018, 304, RN62).

BLOCK 28 - SIZE

Enter the size rod, wire, insert, etc.

BLOCK 29 - MATL

Enter the material type (e.g., CUNI, CRES).

BLOCK 30 - MIL-SPEC

Enter the appropriate MIL-SPEC for the filler and insert (if applicable) material.

BLOCK 31 - MIC NO.

Enter the appropriate MIC number for the filler and insert (if applicable) material. Verify the number from the QA form 2.

BLOCK 32 - WELDING STANDARD

Enter the applicable welding standard.

BLOCK 33 - WELDING PROCEDURE

Enter the weld procedure number.

BLOCK 34 - DATA SHEET

Enter the weld procedure technique sheet number.

BLOCK 35 - POSITION

Check the appropriate block for the weld position.

BLOCK 36 - ACCESSIBILITY

Check the proper block for the actual accessibility.

BLOCK 37 - PREHEAT TEMP

Enter the actual preheat temperature as measured just prior to welding.

BLOCK 38 - PRE-HEAT METHOD

Enter the required pre-heat method.

BLOCK 39 - POST HEAT TEMP START TIME AND STOP TIME

Enter the temperature required for the post weld heat and the start and stop time for post heat.

BLOCK 40 - PURGE GAS

Enter the type of purge gas.

BLOCK 41 - FLOW RATE

Enter the actual flow rate of the purge gas.

BLOCK 42 - SHIELD GAS

Enter the type of shield gas.

BLOCK 43 - FLOW RATE

Enter the actual flow rate of the shield gas.

BLOCK 44 - CUP SIZE

Enter the gas cup size.

BLOCK 45 - TUNGSTEN SIZE

Enter the tungsten size.

BLOCK 46 - WELD LAYER

Enter the layer of welding (i.e., tacks, root, intermediate, and final).

BLOCK 47 - PROCESS

Enter the type of welding process used (e.g., SMAW, GTAW).

BLOCK 48 - QUAL EXP DATE

Enter qualification expiration date.

BLOCK 49 - AMPS

Enter the welding amperage actually used.

BLOCK 50 - INTERPASS TEMP

Enter the maximum interpass temperature as measured during the process.

BLOCK 51 - WELDER SIGNATURE

Print name and enter signature certifying the data recorded in Blocks 46-51 for the layer welded.

BLOCK 52 - DATE

Enter the date Block 51 is signed.

BLOCK 53 - REMARKS

Enter additional remarks or sketches. If required, a continuation of Block 53 is on the back of the form at the bottom for additional information.

BLOCK 54 - INSPECTION STANDARD

Enter the applicable inspection standard.

BLOCK 55 - WELD CLASS

Enter class 1 or 2, per the requirements of NAVSEA 250-1500-1, for nuclear welds. The class (e.g., A-1, A-2, A-F, A-LT, M-1, P-1, PL-T, T-1) for non-nuclear welds.

BLOCK 56 - ACCEPTANCE STANDARD

Enter the applicable acceptance standard.

BLOCK 57 - ACCEPT CLASS

Enter acceptance class 1 or 2, per the requirements of NAVSEA 250-1500-1, for nuclear welds. The class (e.g., I, II, III) for non-nuclear welds.

BLOCK 58 - WELD PREP - COMPONENT A/B

Enter the component name (e.g., pipe, valve).

BLOCK 59 - INSPECTION METHOD

Enter the type and method of inspection performed (e.g., VT 5X, PT).

BLOCK 60 - ACCEPT/REJECT

Enter accept or reject to indicate disposition of the weld preps.

BLOCK 61 - NDT INSPECTOR SIGNATURE

NDT Inspector print name and enter signature certifying the disposition of the weld prep.

BLOCK 62 - DATE

Enter the date Block 61 is signed.

BLOCK 63 - JOINT FIT-UP

Enter results (i.e., inspection method, Accept/Reject, Inspector and date) of joint fit up inspections.

BLOCK 64 - INSP LAYER

Enter the weld layer inspected (i.e., tacks, root, intermediate, final, inside/backside, accessible/inaccessible).

BLOCK 65 - INSP METHOD

Enter the type and method of inspection performed (e.g., VT 5X, PT).

BLOCK 66 - INSP PROC NO.

Enter the inspection procedure number.

BLOCK 67 - ACCEPT/REJECT

Enter accept or reject to indicate disposition of the weld layer. If final disposition of the weld is rejectable, document reason(s) for rejection in Block 53 and description and location of defect(s) in Block 88.

BLOCK 68 - NDT INSPECTOR SIGNATURE

NDT Inspector print name and enter signature certifying the disposition of the weld layer.

BLOCK 69 - DATE

Enter the date Block 68 is signed.

NOTE: IF REPAIRS ARE REQUIRED TO THE JOINT, ENTER THE REPAIR NUMBER IN THE "REPAIR NO.___" BLANK AND RECORD THE INSPECTIONS IN BLOCKS 70 THROUGH 75, 76 THROUGH 81, AND 82 THROUGH 87 IN THE SAME MANNER AS BLOCKS 64 THROUGH 69. BLOCKS NOT COMPLETED WILL BE LEFT BLANK.

BLOCK 88 - L W D

Enter the repair number and the location, length, width, and/or depth of any indications and/or defects noted during the inspections and their disposition.

BLOCK 89 - L W D

Enter the repair number and the location, length, width, and/or depth of any indications and/or defects noted during the inspections and their disposition.

BLOCK 90 - L W D

Enter the repair number and the location, length, width, and/or depth of any indications and/or defects noted during the inspections and their disposition.

BLOCK 91 - FINAL DISPOSITION

The NDT Inspector who completed the final inspection of the final weld will check acceptable or rejectable.

BLOCK 92 - NDT SUPERVISOR SIGNATURE DATE

NDT Supervisor print name, enter signature and date signifying all information in Blocks 1 through 90 is technically and administratively correct.

(This Page Intentionally Left Blank)

RADIOGRAPHIC TEST INSPECTION RECORD
QA FORM 20A

PAGE ____ OF ____

2. SHIP AND HULL NO.	3. JCN:	4. CWP/REC SERIAL NO.	
5. CWP STEP NO.	6. JOINT ID	7. REPAIR NO.	8. INSP STD & CLASS
9. QUALITY LEVEL	10. RT COVERAGE REQD: ( )60 DEG ( )360 DEG ( )100%	11. PENETRAMETER: SOURCE SIDE ( ) SIZE _____ GROUP _____ FILM SIDE ( )	12. SPECIMEN MATL
13. TM	14. TS	15. EXPOSURE TECH ( ) SWE/SWV ( ) DWE/DWV ( ) DWE/SWV	16. FILM: TYPE_____ BRAND_____ LOADED ( ) SINGLE ( ) DOUBLE
17. ISOTOPE: TYPE _____ DIMENSIONS _____ CURIE _____			
18. X-RAY MACHINE MFG _____ MODEL/TYPE _____ VOLTAGE RATING ___	19. X-RAY PARAMETERS KV ___ MA ___ FFS ____	20. SFD	
21. RADIOGRAPHIC SHOOTING SKETCH Depict the following: (1) Direction of radiation (2) Placement of penetrameter (3) Location of location marker (4) Location of shims (if used) (5) Location of Pb "B" (6) Location & thickness of back filter (7) Location of film (8) Blocking/masking technique used (if applicable) NOTE: REFERENCE TO A STANDARD SETUP IS ACCEPTABLE			22. SHIM MATL _____ TM _____ 23. LEAD SCREENS THICKNESS F _____ B _____ 24. REMARKS
25. RADIOGRAPHER		DATE:	

26. RADIOGRAPHIC INTERPRETATION

LOCATION MARKERS									REMARKS:
VISIBLE T-HOLE									
LIGHTEST DENSITY									
DARKEST DENSITY									
SHIM DENSITY									
CRACK									DESCRIPTION AND SIZE OF INDICATIONS
SLAG/OXIDE									
POROSITY									
LOP									
LOF									
MELT THROUGH									
BURN THROUGH									
ROOT OX									
CRATER PIT									
TUNGSTEN									
ROOT SUR CONCAVITY									
ROOT SUR CONVEXITY									
UNDERCUT									
ROOT C/L CREASE									
INCOMPLETE INSERT MELT									
OTHER									

27. ( ) ACCEPT ( ) REJECT	28. RT INSPECTOR DATE
29. RT EXAMINER IDENT DATE	

THE PERSON DESIGNATED TO SIGN FOR AN ACTION VERIFIES, BASED ON PERSONAL OBSERVATION OR CERTIFIED RECORDS, AND CERTIFIES BY HIS/HER SIGNATURE THAT THE ACTION HAS BEEN PERFORMED IN ACCORDANCE WITH THE SPECIFIED REQUIREMENTS.

(This Page Intentionally Left Blank)

QA FORM 20A INSTRUCTIONS

RADIOGRAPHIC TEST INSPECTION RECORD

PURPOSE: To provide a supplement to the QA form 20 to document the technical aspects of the radiograph and the acceptance or rejection of the item radiographed. Both the QA form 20 and QA form 20A are required for a complete radiographic record of a joint.

PROCEDURE: QA form 20A will be completed by the radiographer and the RT inspector. The numbered blocks on QA form 20A correspond with the instructions listed below.

BLOCK 1 - PAGE OF

Enter the page number, starting with page 2, of the total number of QA forms 20A associated with the joint (e.g., 2 of 3, 3 of 3). The associated QA form 20 is always page 1 of _____.

BLOCK 2 - SHIP AND HULL NO.

Enter the tended ship's name and hull number.

BLOCK 3 - JCN

Enter the JCN.

BLOCK 4 - CWP/REC SERIAL NO.

Enter the CWP/REC serial number or enter N/A if no CWP/REC is required. Do not list the CWP/REC revision.

BLOCK 5 - CWP STEP NO.

Enter the CWP step number(s).

BLOCK 6 - JOINT ID

Enter JID.

BLOCK 7 - REPAIR NO.

Enter ORIG or repair number (e.g., R-1, R-2).

BLOCK 8 - INSP STD & CLASS

Enter the inspection standard and class.

BLOCK 9 - QUALITY LEVEL

Enter the quality level required.

BLOCK 10 - RT COVERAGE REQ'D

Indicate the RT coverage required.

BLOCK 11 - PENETRAMETER

Record the penetrameter size and group. Indicate use of source or film side penetrameter.

BLOCK 12 - SPECIMEN MATL

Enter the material type of the item being radiographed (e.g., NICU, CFE).

BLOCK 13 - TM

Enter the nominal or actual, or design material thickness of the item being radiographed per NAVSEA 250-1500-1 or NAVSEA T9074-AS-GIB-010/271.

BLOCK 14 - TS

Enter the total specimen thickness.

BLOCK 15 - EXPOSURE TECH

Check the appropriate technique used (e.g., if a pipe was radiographed through two walls and the image of both walls are to be viewed for acceptance, enter an "X" in the brackets next to DWE/DWV).

BLOCK 16 - FILM

Enter the film type and brand. "X" the appropriate method used to load the film cassette.

BLOCK 17 - ISOTOPE

Record the listed information when using the source.

BLOCK 18 - X-RAY MACHINE MFG

Record the listed information when using the X-ray machine.

BLOCK 19 - X-RAY PARAMETERS

Record the listed information when using the X-ray machine.

BLOCK 20 - SFD

Enter the source to film distance used.

BLOCK 21 - RADIOGRAPHIC SHOOTING SKETCH

The radiographer will draw a sketch indicating the items listed.

BLOCK 22 - SHIM

Enter the shim material used and thickness.

BLOCK 23 - LEAD SCREENS THICKNESS

Record thickness, front and back of the intensifying screens.

BLOCK 24 - REMARKS

The radiographer will use this block to record any unusual technique requirements.

BLOCK 25 - RADIOGRAPHER

The radiographer will print name, sign and date upon verifying that all the information in Blocks 1 through 21 is correct.

BLOCKS 26 thru 28 - RADIOGRAPHIC INTERPRETATION

NOTE: BLOCK 26 WILL BE COMPLETED BY THE RT INSPECTOR AS THE FILM IS READ.

a. One RT Inspector will evaluate the radiograph, check ACCEPT/REJECT as appropriate in Block 27, print name, enter signature and date in Block 28.

b. It is important to note that all indications read must be recorded on the QA form 20A and dispositioned in the appropriate block.

c. Additional sheets may be added to the report by the RT Inspector. The additional sheets will be properly numbered and will be authenticated with printed name and signature on each sheet by the RT Inspector making up the report.

BLOCK 29 - RT EXAMINER

The Command RT Examiner will review the weld record (including radiographic film) for completeness accuracy and compliance with applicable standards, print name, enter signature, unique identification number, and date.

(This Page Intentionally Left Blank)

STRUCTURAL PRIMARY RECORD
QA FORM 20B (PART A)

1. RECORD NO. A-	2. LWC/SHOP:	3. SHEET 1 OF

4. SHIP HULL NO.	5. JCN	6. CWP/REC SER NO.

7. REFERENCES

A.	B.	C.
D.	E.	F.

JOINT IDENTIFICATION

8.	9.	10.	11. COMPONENT NUMBER 1				12. COMPONENT NUMBER 2				13. WELD INFO		
JOINT NUMBER	SS/ SOC	REC	REF	PC NO.	MATL TYPE	MATL THICK	REF	PC NO.	MATL TYPE	MATL THICK	JOINT DESIGN	WELD SIZE	REMARKS

14. REMARKS

NDT REQUIREMENTS AND CERTIFICATION DATA

19. NDT METHODS & ACCEPTANCE PROCEDURES/REV/CHG	VT:	MT:	PT:
ET:	UT/RT:	25. RECORD NO. OF REPAIR CYCLES: (SURFACE SHIPS ONLY)	

20. JT NO.	21. NDT OR DATA REQUIREMENT	22. CERTIFICATION OF DATA ENTRY or SAT NDT (SIGNATURE/DATE)	24. SUPPLEMENTAL RECORD (CHECK IF REQD)	
			23. DATA ENTRY OR ADDITIONAL NDT RQMT	

26. REMARKS:

FINAL DISPOSITION	27. SUPERVISOR SIGNATURE/DATE	28. (SS/SOC ONLY) QAS SIGNATURE/DATE

STRUCTURAL PRIMARY RECORD (cont. sheet)
QA FORM 20B (PART A)

1. RECORD NO. A-	2. LWC/SHOP:	3. SHEET OF

4. SHIP HULL NO.	5. JCN	6. CWP/REC SER NO.

7. REFERENCES

A.	B.	C.
D.	E.	F.

JOINT IDENTIFICATION

8.	9.	10.	11. COMPONENT NUMBER 1				12. COMPONENT NUMBER 2				13. WELD INFO		
JOINT NUMBER	SS/ SOC	REC	REF	PC NO.	MATL TYPE	MATL THICK	REF	PC NO.	MATL TYPE	MATL THICK	JOINT DESIGN	WELD SIZE	REMARKS

14. REMARKS

NDT REQUIREMENTS AND CERTIFICATION DATA

19. NDT METHODS & ACCEPTANCE PROCEDURES/REV/CHG	VT:	MT:	PT:
ET:	UT/RT:	25. RECORD NO. OF REPAIR CYCLES: (SURFACE SHIPS ONLY)	

20. JT NO.	21. NDT OR DATA REQUIREMENT	22. CERTIFICATION OF DATA ENTRY or SAT NDT (SIGNATURE/DATE)	24. SUPPLEMENTAL RECORD (CHECK IF REQD)	23. DATA ENTRY OR ADDITIONAL NDT RQMT	

26. REMARKS

QA FORM 20B (PART A) INSTRUCTIONS

STRUCTURAL PRIMARY RECORD

PURPOSE: To provide a standard form and instruction for documenting required structural welding and NDT completion data.

NOTES:

1. PLANNING AND ESTIMATING (P&E) SHALL COMPLETE BLOCKS 1-14, 20, 21, 22-24 (PARTIAL), AND 26 (IF NECESSARY) FOR SUBMARINE RECORDS. ANNOTATED PERSONNEL SHALL COMPLETE ALL REMAINING BLOCKS.

2. RECORD OF ACCOMPLISHMENT DEFINITION: A RECORD USED FOR SOME SUBMARINE WELDS THAT NAVSEA TECH PUB T9074-AD-GIB-010/1688 ALLOWS REDUCED NDT DATA REQUIREMENTS. IT IS PRIMARILY USED FOR MAGNETIC PARTICLE TESTING (MT) INSPECTION. MT INSPECTIONS THAT MAY USE A RECORD OF ACCOMPLISHMENT FOR COMPLETION DATA ARE DEFINED IN TABLES 6-1 AND 6-2 OF NAVSEA TECH PUB T9074-AD-GIB-010/1688, BY REFERENCE TO NOTE 8. NDT COMPLETION DATA FOR A RECORD OF ACCOMPLISHMENT IS DEFINED IN NAVSEA TECH PUB T9074-AD-GIB-010/1688, PARAGRAPH 5.3.1.

3. BLOCKS/ROWS OF THIS RECORD MAY BE EXPANDED OR DELETED TO SUIT THE WORK BEING DOCUMENTED.

4. EACH SIGNATURE WILL BE ACCOMPANIED BY A PRINTED NAME AND DATE. AN EMPLOYEE MAY USE THEIR INITIALS PROVIDED THEIR SIGNATURE AND PRINTED NAME APPEAR ELSEWHERE ON THE SAME PAGE.

SCOPE: The scope of this instruction is limited to structural welding and NDT for overhaul and repair governed by NAVSEA Tech Pub T9074-AD-GIB-010/1688, or MIL-STD-1689A as invoked by Naval Ships Tech Manual S9086-CH-STM-010/CH-074, through NAVSEA S9AA0-ABGOS-010/GSO, NAVSEA 0902-018-2010 or COMFLTFORCOMINST 4790.3 Joint Fleet Maintenance Manual.

BLOCK 1 - RECORD NO.

Enter the Part A record number. The numbering convention is A-01, A-02, A-03 etc., in numerical order, depending on how many Part A records are generated for the TWD. Keep the number of Primary Records generated to a minimum.

BLOCK 2 - LWC/SHOP

Enter local work center or lead shop.

BLOCK 3 - SHEET

(P&E/Craftsman/Inspector) Enter the sheet number of the Part A record or Part A continuation sheet. Total number of sheets generated (e.g., 2 of 3) will be added by the supervisor at time of signature in Block 27. It is pre-printed for the first sheet. All continuation sheet numbers must be added. Sheet numbers for Part A, B and C records are not associated. They are unique only to the record, Part A, B, or C that you are dealing with.

BLOCK 4 - SHIP/HULL NO.

Enter the ship name and/or hull type, SSN, SSBN/SSGN, CVN, etc., and unique hull number for the ship, 759, 732, or 65, etc.

BLOCK 5 - JCN

Enter the Job Control Number (JCN).

BLOCK 6 - CWP/REC

Enter the CWP/REC serial number or enter N/A if no CWP/REC is required. Do not list the CWP/REC revision.

BLOCK 7 - REFERENCES

Enter references, drawings etc. that are to be used to describe joints. Do not enter references that are associated only with joints that require a Part B record.

BLOCK 8 - JOINT NUMBER

Enter the Joint Numbers.

BLOCK 9 - SS/SOC

Check the block associated with each joint number if it is SUBSAFE or Scope Of Certification (SOC). All joints that involve the SUBSAFE boundary shall be checked whether they require re-entry control or not. For example, attachment welds to the boundary shall be checked even though this work is not subject to re-entry control.
For surface ship welds, enter NA.

BLOCK 10 - REC (SHIPYARD USE ONLY)

Check the block associated with each joint number if the joint requires re-entry control.

BLOCK 11 - COMPONENT NUMBER 1 (Leave blocks blank for joints that require a Part B Record.)

Enter the letter associated with the drawing number in Block 7, which describes the component and enter the piece number (if necessary to describe the joint) for the component. For joints that may require explanation, enter "See remarks" as a reference in a Block 7, refer to this note as you would a drawing and give the explanation in remarks.

The term "EXISTING" may be used to describe existing ship structure, provided the other component in the joint defines the joint location. To do this, add "EXISTING" as a reference in Block 7, refer to it as you would a drawing, and "N/A" the piece number. Enter the base material type (OSS, HY-80, HSS, etc.), S-Group Number from Table 1 of NAVSEA S9074-AQ-GIB-010/248, and the drawing material thickness (decimal or fraction).

BLOCK 12 - COMPONENT NUMBER 2

Make entries for Component 2 as described in Block 11. For repair sites, enter N/A in Component 2 columns.

BLOCK 13 - WELD INFO (Leave blocks blank for joints that require a Part B Record.)

JOINT DESIGN: Enter the joint design in terms of MIL-STD-22 joint numbering system (PT2S.1, PT2V.1, C2V.2, B2V.3 etc.). Use Remarks (Block 14) to describe "Special Joints", as described in paragraph 11.4.7 of NAVSEA Tech Pub T9074-AD-GIB-010/1688 or paragraph 11.2.7 of MIL-STD-1689A, including any special weld buildup required for the joint.

WELD SIZE: Enter the weld size in terms of fractions. Enter N/A for butt welds, plug welds, base material repairs, weld surfacing, corner welds with no reinforcing fillet, clad welds, and edge welds. For PT2V.3 and PT2V.4, enter sizes for both reinforcing fillets. Use Remarks blocks for local joint clarification or joint or sketch numbers.

BLOCK 14 - REMARKS

Enter any joint clarifying comments. This block may also be used to specify any special heat restriction instructions (e.g., preheat and interpass requirements). Each entry shall contain signature, printed name and date except where the entry is pre-printed on the form by P&E.

NOTE: BLOCKS 15-18 ARE RESERVED FOR FUTURE USE.

BLOCK 19 - NDT METHODS & ACCEPTANCE PROCEDURES/REV/CHG

(INSPECTOR) Enter the NDT methods and acceptance standard procedure, revision, and change for NDT listed in Block 21 as the inspection is performed. This entry is not required for joints that do not list required NDT or that have Block 24 checked off. Leave unused blocks blank.

BLOCK 20 - JOINT NO.

(P&E) Repeat joint numbers listed in Block 8.

BLOCK 21 - NDT OR DATA REQUIREMENT

NOTE: LEAVE THIS BLOCK BLANK IF A PART B RECORD IS REQUIRED. IF A PART B RECORD IS NOT USED, ENTER REQUIRED NDT OR DATA REQUIREMENTS AS FOLLOWS:

a. DATA REQUIREMENTS: List WELD COMPL (weld complete) as the first entry for each joint listed in Block 20 that does not require a Part B record.

b. NDT REQUIREMENTS: List required NDT for the joint. List each required NDT as a separate line item in approximate order in which they will occur. Use the following convention: List NDT Type first (VT, 5X VT, MT, PT, ET, RT or UT), Wait Time second (8HR, 24HR, 7DAY, or AH (for after hydro) etc.), and Phase last (EXCAV, BACKGOUGE or FINAL). It is not necessary to give a wait time for ambient temperature NDT; it is assumed if not given. Typical examples are: MT EXCAV, MT BACKGOUGE, MT FINAL, ET FINAL, PT FINAL, RT 8HR FINAL, MT 24HR FINAL, MT 7DAY FINAL, MT AH FINAL, and VT FINAL.

c. WORKMANSHIP AND VT SPECIAL REQUIREMENTS:

1) Workmanship inspections are not normally listed as required NDT. Certification of satisfactory completion is made either by TWD signature when the joint does not require documentation using a Part A or Part B record, or by signature on the Part A or Part B record when the joint does require documentation.

2) Joints that require VT only do not require a structural record. The VT is specified and certified by TWD. Certification of satisfactory VT completion for VT only welds can be made by a NDT inspector signature in the body of the TWD.

BLOCK 22 - CERTIFICATION OF DATA ENTRY OR SAT NDT

a. (P&E) Enter "See Part B record" for joints that require a Part B record.

b. (WELDER) Enter signature, printed name, and date beside each WELD COMPL data entry to certify that the weld is complete, and that fit-up and weld workmanship inspection requirements have been met. The weld is complete when all weld metal has been deposited, required weld soaks are completed, preheat is removed, weld has cooled to ambient temperature and the weld has been prepared to ensure the weld is ready for final NDT. When required, include the ambient temperature time in Block 23 as described in Block 23 instructions.

c. (NDT INSPECTORS) Enter signature, printed name, and date for each NDT when the NDT is satisfactory. Except when a Part C record is required, this signature is made when the weld is complete and the NDT is satisfactory. Part C records are required only if local instructions require them or if the note "Initiate a Part C record if NDT fails" appears in Block 23. If a Part C record is required and the NDT you are performing rejects the weld, enter an X in Block 24 for the NDT that generated the reject and initiate a Part C record. Your signature in Block 22, in this case, indicates the NDT failed and a Part C record was generated. If indications are cleared by grinding/polishing only and the subsequent VT (final) is satisfactory, a Part C record is not required.

BLOCK 23 - DATA ENTRY OR ADDITIONAL NDT REQMT

a. (P&E)

1) Enter any NDT clarifying comments, (i.e., partial inspections and/or expansion requirements).

2) Enter "AMB TIME:" for each WELD COMPL data requirement listed in Block 21.

NOTE: THE AMBIENT TIME IS ONLY REQUIRED IF SUBSEQUENT NDT HAS A WAIT TIME, SUCH AS A 24 HOUR MT.

3) Enter "PENETRANT:" for each PT requested in Block 21.

4) Enter "EQUIP No:" for each ET requested in Block 21.

5) For submarine envelope attachment weld MT inspections, enter "Initiate a Part C record if NDT fails" and "EQUIP No:".

6) For submarines, enter "Initiate a Part C record if NDT fails" for RT/UT listed in Block 21 (expansions are required when repair welding is required as a result of RT or UT inspection).

b. (WELDERS) Enter military time when the weld reaches ambient temperature beside the "AMB TIME:" entry associated with each WELD COMPL data requirement. If this data is entered by someone other than who signed Block 22, a signature, printed name and date is required.

NOTE: THE AMBIENT TIME IS ONLY REQUIRED IF SUBSEQUENT NDT HAS A WAIT TIME, SUCH AS A 24 HOUR MT.

c. (NDT INSPECTORS)

1) Enter penetrant used, manufacturer's brand and type, beside each "PENETRANT:" entry.

2) Enter equipment information as follows beside each MT or ET with "EQUIP No:" entry:

(a) ET: Enter unique equipment identification, or instrument manufacturer and model number used.

(b) MT: If AC yoke is used enter the word "Yoke". Otherwise, enter unique equipment identification, or instrument manufacturer and model number used.

BLOCK 24 - SUPPLEMENTAL RECORD (CHECK IF REQD)

(NDT INSPECTORS) When required by local procedures to document deficiencies, or if the note "Initiate a Part C record if NDT fails" is listed in Block 23, a Part C record shall be initiated to document defects. If a part C record is initiated, check the box in the row associated with the required NDT.

BLOCK 25 - RECORD NO. OF REPAIR CYCLES (SURFACE SHIPS ONLY)

(INSPECTOR/WELDER) Enter the number of repair cycles required to obtain a satisfactory NDT, (i.e., "1" for the first cycle, "2" for the second, etc.).

BLOCK 26 - REMARKS

(ALL) Enter any clarifying comments associated with the record. Add or refer to any expansion requirements here or in Block 14. Each entry shall contain signature, printed name, and date except where the entry is pre-printed on the form by P&E.

BLOCK 27 - SUPERVISOR

(WELD SUPERVISOR) Certify final disposition of all welding and NDT for all joints listed in Block 20 (including continuation sheets) by entering signature, printed name, and date. This includes certification of any Part C records generated. Ensure that page numbering is correct.

BLOCK 28 - QAS (SUBSAFE/SOC ONLY)

(QAS) Enter signature, printed name, and date to certify completeness of entries. To aid the certification process, this block is repeated on the Part B record in Block 34. For joints being documented by Part B record, the individual signing for all joints shall review the certification signature(s) on the Part B record(s) and sign the Part A record based on the Part B signature(s).

STRUCTURAL PRIMARY RECORD CONTINUATION SHEET: Follow corresponding block instructions in this attachment.

(This Page Intentionally Left Blank)

STRUCTURAL WELD HISTORY
QA FORM 20B (PART B) (FRONT)

1. JOINT NO.	2. LWC/SHOP:	3. SHEET 1 OF

4. SHIP HULL NO.	5. JCN	6. CWP/REC: ☐ YES ☐ NO

7. REFERENCES

A.	B.	C.

JOINT IDENTIFICATION

8. COMPONENT NUMBER 1				9. COMPONENT NUMBER 2				10. WELD INFO		
REF	PC NO.	MATL TYPE	MATL THICK	REF	PC NO.	MATL TYPE	MATL THICK	JOINT DESIGN	WELD SIZE	REMARKS

11. REMARKS

12. NEW MATERIAL: MATL DOCUMENTATION REQUIRED ☐Y ☐N CRAFTSMAN/QAI: ENTER TRACEABLE MATERIAL MARKING (E.G., MIC NO., TCSM NO., HEAT NO., OR OTHER) FOR THE PIECE NUMBER (PC NO.) BELOW, UNLESS USE OF EXISTING MATERIAL IS SPECIFIED.

REF	PC NO.	TRACEABLE MATL MARKING	CRAFTSMAN/QAI: MATERIAL VERIFICATION (SIGNATURE/DATE)

WELD HISTORY

13. WELD PROCEDURE, REV., CH, AND TECHNIQUE SHEETS:		14. MIN PREHEAT:	15. MAX INTERPASS:

16. WELD FILLER MATERIAL (WELDER) ENTER TRACEABLE FILLER MARKING (MIC NO.)

LETTER	GRADE/TYPE	MIC NO.	LETTER	GRADE/TYPE	MIC NO.
A			C		
B			D		

17. FITUP SAT: CRAFTSMAN/QAI (SIGNATURE/DATE)

18. PHASE LETTER KEY: F=BUILDUP OF BASE MATERIAL FOR FIT-UP; W=TACKING OR WELDING JOINT; BG=BACKGOUGE WORKMANSHIP SAT. (VERIFY BG NDT PRIOR TO WELD IF REQD)

19. PHASE LETTER	20. FILLER LETTER	21. PREHEAT & INTERPASS TEMP	22. WELDER & WELD WORKMANSHIP (WELDER SIGNATURE/DATE)	23. REMARKS
		☐ SAT		
		☐ SAT		
		☐ SAT		
		☐ SAT		
		☐ SAT		
		☐ SAT		

☐ SEE STRUCTURAL WELD HISTORY CONTINUATION SHEET

24. WELDING COMPLETE	WELDER (SIGNATURE/DATE)	
25. JOINT IS AT AMBIENT TEMP	WELDER (SIGNATURE/DATE)	MILITARY TIME AT AMBIENT TEMP:
26. JOINT IS COMPLETE AND READY FOR FIN AL NDT	CRAFTSMAN/CRAFTSMAN SUPERVISOR (SIGNATURE/DATE)	

REQUIRED NDT

27. REQD NDT (TYPE, WAIT TIME, & PHASE)	28. NDT & ACCEPTANCE PROCEDURE, REV, CH	29. NDT RPT/EQPT (FOR ET OR MT, RECORD SERIAL # OF MANF & MODEL NO.) (FOR MT BY YOKE, ENTER "YOKE"). FOR PT, ENTER TYPE OF LIQUID PENETRANT, FOR RT/UT, ENTER REPORT #	30. RESULTS A OR R (NOTE 1)	31. INSPECTOR (SIGNATURE/DATE)
MT EXCAV (NOTE 2)		ENTRY NOT REQUIRED		
MT BACKGOUGE (NOTE 2)		ENTRY NOT REQUIRED		
MT EVERY LAYER (NOTE 2&3)		ENTRY NOT REQUIRED		
VT FINAL		NA		
RT 8 HR FINAL				
UT 8 HR FINAL				
MT AMBIENT FINAL				

QA FORM 20B (PART B) (BACK)

REQUIRED NDT (CONT.)

27. REQD NDT (TYPE, WAIT TIME, & PHASE)	28. NDT & ACCEPTANCE PROCEDURE, REV, CH	29. NDT RPT/EQPT (FOR ET OR MT, RECORD SERIAL # OF MANF & MODEL NO.) (FOR MT BY YOKE, ENTER "YOKE"). FOR PT, ENTER TYPE OF LIQUID PENETRANT, FOR RT/UT, ENTER REPORT #	30. RESULTS A OR R (NOTE 1)	31. INSPECTOR (SIGNATURE/DATE)
MT 24 HR FINAL				
MT 7 DAY FINAL				
PT FINAL				
MTAH FINAL				
ET FINAL				
ETAH FINAL				

NOTE 1: ANY WORK & FINAL NDT INSPECTIONS TO RESOLVE DOCUMENTED REJECTS ON THIS RECORD SHALL BE DOCUMENTED ON PART C RECORDS UNLESS NOTE 2 IS INVOKED IN BLOCK 27. DEFECTS REMOVED IN-PROCESS OF ANY VT, MT, OR PT DO NOT HAVE TO BE DOCUMENTED ON A PART C RECORD.

NOTE 2: DEFECTS DO NOT HAVE TO BE DOCUMENTED. A PART C RECORD IS NOT REQUIRED. CERTIFY AFTER ALL DEFECTS ARE REPAIRED AND THE NDT IS SATISFACTORY.

NOTE 3: MT EVERY LAYER SIGNIFIES MT INSPECTION AFTER DEPOSITION OF EACH LAYER, OR 3/8 INCH THICKNESS, WHICHEVER IS GREATER.

32. REMARKS

FINAL DISPOSITION	33. WELD SUPERVISOR (SIGNATURE/DATE)	34. (SUBSAFE/SOC/REC ONLY) QAS: (SIGNATURE/DATE)

STRUCTURAL WELD HISTORY CONTINUATION SHEET
QA FORM 20B (PART B)

1. JOINT NO.		3. SHEET OF
4. SHIP HULL NO.	5. JCN	6. CWP/REC: ☐ YES ☐ NO

WELD HISTORY

13. WELD PROCEDURE, REV., CH, AND TECHNIQUE SHEETS: ☐ SAME AS ORIGINAL		14. MIN PREHEAT:	15. MAX INTERPASS:

16. WELD FILLER MATERIAL (WELDER) ENTER TRACEABLE FILLER MARKING (MIC NO.)

LETTER	GRADE/TYPE	MIC NO.	LETTER	GRADE /TYPE	MIC NO.
A			C		
B			D		

18. PHASE LETTER KEY: F=BUILDUP OF BASE MATERIAL FOR FIT-UP; W=TACKING OR WELDING JOINT; BG=BACKGOUGE WORKMANSHIP SAT. (VERIFY BG NDT PRIOR TO WELD IF REQD)

19. PHASE LETTER	20. FILLER LETTER	21. PREHEAT & INTERPASS TEMP	22. WELDER & WELD WORKMANSHIP (WELDER SIGNATURE/DATE)	23. REMARKS
		☐ SAT		
		☐ SAT		
		☐ SAT		
		☐ SAT		
		☐ SAT		
		☐ SAT		
		☐ SAT		
		☐ SAT		
		☐ SAT		
		☐ SAT		
		☐ SAT		
		☐ SAT		
		☐ SAT		
		☐ SAT		
		☐ SAT		
		☐ SAT		
		☐ SAT		
		☐ SAT		
		☐ SAT		
		☐ SAT		

☐ SEE STRUCTURAL WELD HISTORY CONTINUATION SHEET

32. REMARKS

(This Page Intentionally Left Blank)

QA FORM 20B (PART B) INSTRUCTIONS

STRUCTURAL WELD HISTORY

NOTE: P&E PERSONNEL SHALL COMPLETE BLOCKS 1, 2, 4, 5, 7-11, 12 (PARTIAL), 14-15 (IN SPECIAL SITUATIONS), 27, AND 32 (IF NECESSARY). ANNOTATED PERSONNEL SHALL COMPLETE ALL REMAINING BLOCKS. FOR CONTINUATION SHEETS GENERATED DURING PLANNING, P&E SHALL COMPLETE BLOCKS 1, 4, 5 AND 32 (IF NECESSARY). ANNOTATED PERSONNEL SHALL COMPLETE ALL REMAINING BLOCKS. FOR CONTINUATION SHEETS GENERATED DURING EXECUTION, ANNOTATED PERSONNEL SHALL COMPLETE ALL BLOCKS.

NOTE: BLOCKS/ROWS OF THIS RECORD MAY BE EXPANDED OR DELETED TO SUIT THE WORK BEING DOCUMENTED.

BLOCK 1 - JOINT NO.

Enter Joint Number. If the Part B record is referenced from a Part A record, the joint number on both records must match.

BLOCK 2 - LWC/SHOP

Enter lead work center.

BLOCK 3 - SHEET

(CRAFTSMAN/INSPECTOR/P&E) Enter the sheet number(s) of Part B continuation sheets generated. Inspector/Craftsman enter total number of sheets generated, (e.g., 1 of 3, 2 of 3 at the time of completion). (The first sheet, the Part B record, is pre-printed as "Sheet 1 of "). Sheet numbers for Part A, B and C records are not associated. They are unique only to the record, Part A, B, or C, that you are dealing with.

BLOCK 4 - SHIP/HULL NO.

Enter the ship name and/or hull type, SSN, SSBN/SSGN, CVN, etc., and unique hull number for the ship, 759, 732, or 65, etc.

BLOCK 5 - JCN

Enter the Job Control Number (JCN).

BLOCK 6 - CWP/REC

Check the [ ] Y box if CWP or REC is required, and enter CWP or REC number. Check the [ ] N box if a CWP or REC is not required.

BLOCK 7 - REFERENCES

Enter references, drawings etc. that are to be used to describe joints or material requiring traceability.

BLOCK 8 - COMPONENT NUMBER 1

Enter the letter associated with the drawing number in Block 7, which describes the component and enter the piece number (if necessary to describe the joint) for the component. For joints that may require explanation, enter "See remarks" as a reference in Block 7, refer to this note as you would a drawing and give the explanation in remarks. When piece number, material type, or material thickness is provided in Remarks, these columns should be left blank, or a dash entered.

The term "EXISTING" may be used to describe existing ship structure, provided the application is not SUBSAFE/SOC, and provided the other component in the joint defines the joint location. To do this, add "EXISTING" as a reference in Block 7, refer to it as you would a drawing, and "N/A" the piece number.

Enter the base material type (OSS, HY-80, HSS, etc.), S-Group Number from Table I of NAVSEA S9074-AQ-GIB-010/248 and the component thickness (decimal or fraction). If a component has more than one thickness or material type, enter each one on a separate row, or use Block 11 (Remarks).

BLOCK 9 - COMPONENT NUMBER 2

Make entries for Component 2 as described in Block 8. For repair sites, enter N/A in Component 2 columns.

BLOCK 10 - WELD INFO

Enter the joint design in terms of MIL-STD-22 joint numbering system (PT2S.1, PT2V.1, C2V.2, B2V.3, etc.). Use Remarks (Block 11) to describe "Special Joints", as described in paragraph 11.4.7 of NAVSEA Tech Pub T9074-AD-GIB-010/1688, including any special weld buildup required for the joint. For base material repairs and weld surfacing, enter N/A, or describe the repair or surfacing in Remarks (Block 11).

Enter the weld size in terms of fractions. Enter N/A for butt welds, plug welds, corner welds with no reinforcing fillet, weld surfacing, base material repairs, and edge welds. For PT2V.3 and PT2V.4, enter sizes for both reinforcing fillets. Use Remarks for local joint clarification or joint numbers.

BLOCK 11 - REMARKS

Enter any joint clarifying comments. Add or refer to any expansion requirements here or in Block 32. Each entry shall contain signature, printed name and date except where the entry is pre-printed on the form by P&E.

BLOCK 12 - NEW MATERIAL

a. (P&E) Check the box "[ ] Y or [ ] N", to indicate that material documentation is or is not required and enter reference letter from Block 7 and the associated piece number to describe the material requiring traceability. Block 12 is marked "No" when electrode only is installed (e.g., repair of a pit, or for cladding) because electrode is entered in Block 16.

b. (CRAFTSMAN/QAI) At the time of installation, enter traceable material marking (e.g., MIC No., TSCM No., Heat No., or other) for the piece number listed and certify (signature, printed name, and date). If existing material is being reinstalled, enter "EXISTING" in the TRACEABLE MATERIAL-MARKING column and sign. If "No" is Checked by P&E, no entry is required.

BLOCK 13 - WELD PROCEDURE, REV, CH, AND TECHNIQUE SHEET(S)

(WELDER) Before welding, enter the Weld Procedure to be used. Include Technique Sheet if applicable.

BLOCK 14 - MINIMUM PREHEAT

(WELDER) Before welding, enter the required minimum preheat. In certain situations, when heat must be controlled using non-standard temperatures, P&E may complete this block.

BLOCK 15 - MAXIMUM INTERPASS

(WELDER) Before Welding, enter the required maximum interpass temperature. In certain situations, when heat must be controlled, P&E may complete this block.

BLOCK 16 - WELD FILLER MATERIAL

(WELDER) Just prior to welding, enter grade/type (e.g., MIL-11018-M or 11018-M) and MIC Number (e.g., WCAF 9093 202A) of electrode used. Filler letters, A, B, C, etc., are provided so that the data needs only to be entered once for that electrode and its corresponding traceability number. Enter the filler letter, A, B, C, etc., corresponding to the electrode used during the weld process in the FILLER LTR block, Block 20. The filler material information recorded in this block only applies to weld phases being documented on this sheet. If a continuation sheet is used, the filler material used to document welding on that continuation sheet shall be recorded in Block 16 of that sheet.

BLOCK 17 - FITUP SAT

(CRAFTSMAN/QAI) Enter signature, printed name, and date when the workmanship inspection for fit-up or base material preparation for weld surfacing/repair is satisfactory. This signature certifies that the joint or base metal surface is ready for welding. For weld repairs, the signature certifies the excavation is ready for NDT (if required).

BLOCK 18 - PHASE LETTER KEY

No entry is required for this block. Use Phase Letter Key given to complete Block 19.

BLOCK 19 - PHASE LETTER

(WELDER) Using the Phase Letter Key given, enter the phase being accomplished during the weld process in the PHASE LETTER blocks provided. Check the box, "[ ] (See Structural Weld History Continuation Sheet)" when the record has insufficient room for the number of entries, and a continuation sheet is needed.

BLOCK 20 - FILLER LETTER

(WELDER) Enter the letter corresponding to the filler material information entered in Block 16 of the sheet you are completing. If the phase does not involve the addition of filler metal, enter N/A.

BLOCK 21 - PREHEAT & INTERPASS TEMP

(WELDER) Check Preheat and Interpass Temperature for the phase being accomplished. Mark the block when satisfactory. Take corrective action if it is not satisfactory. Enter "NA" for phases that do not involve welding, (e.g., backgouge phases).

BLOCK 22 - WELDER AND WELD WORKMANSHIP

(WELDER) Enter signature, printed name, and date for the associated phase. Signing of this block certifies that all welding has been performed in accordance with the welding procedure entered in Block 13; the MIC number of welding rod(s) used is recorded in Block 16; Blocks 19, 20, and 21 are completed and required information is correct and that all weld workmanship inspection requirements have been satisfied. For backgouge phase, the signature certifies that the weld has been backgouged and the root meets the workmanship requirements. Block 22 signatures shall be made based on personal observation.

BLOCK 23 - REMARKS

(WELDER) Enter remarks if necessary. If the remark is made by someone other than the welder who signed Block 22, entry shall contain signature, printed name, and date except where the entry is pre-printed on the form by P&E.

BLOCK 24 - WELDING COMPLETE

(WELDER/WELDER SUPERVISOR) Enter signature, printed name, and date when welding is complete, all metal has been deposited, required weld soaks are completed, preheat is removed and weld meets workmanship inspection requirements. This signature shall be made based on personal observation or by normal trade supervisory controls.

BLOCK 25 - JOINT IS AT AMBIENT TEMP

(WELDER OR WELDER SUPERVISOR) Enter military time weld reached ambient temperature and sign name (include name and date). NOTE: The ambient time is only required if subsequent NDT has a wait time, such as a 24 hour MT.

BLOCK 26 - JOINT IS COMPLETE AND READY FOR FINAL NDT

(CRAFTSMAN) Enter signature, printed name, and date when the joint is complete and ready for final NDT (i.e., meets workmanship inspection requirements).

BLOCK 27 - REQUIRED NDT

(P&E) Choose the required NDT from the menu given or add NDT if necessary. The NDT menu given lists most NDT required by NAVSEA Tech Pub T9074-AD-GIB-010/1688. Choose the NDT you desire by deleting the rows from the form for NDT that is not required. Include the Notes block at the bottom of the menu. After deleting NDT that is not required, ensure that the required NDT list will fit on a single page. If "MT EXCAV", "MT BACKGOUGE", and "MT EVERY LAYER" are not used, delete Note 2 from the note block. If "MT EVERY LAYER" is not used, delete Note 3 from the Note block.

BLOCK 28 - NDT & ACCEPTANCE PROCEDURE REV, CH

(INSPECTOR) Enter the NDT methods and acceptance standard procedure used.

BLOCK 29 - NDT REPORT, EQUIPMENT

(INSPECTOR) Enter NDT Report number or equipment used as directed on the form. Enter "Yoke" when performing an MT by yoke method. Equipment information is not required for MT by yoke. If "MT EXCAV", "MT BACKGOUGE" or "MT EVERY LAYER" is the NDT listed in Block 27, "Entry Not Required" may be entered in Block 29. (See example of Part B form).

BLOCK 30 - RESULTS A OR R

(INSPECTOR) Enter "A" for accept or "R" for reject to indicate the inspection result. If indications are cleared by grinding/polishing only, and the subsequent VT (final) is satisfactory, a Part C record is not required.

BLOCK 31 - INSPECTOR

(INSPECTOR) Enter signature, printed name, and date for the inspections performed. When a NDT results in a deficiency, the results of any other NDT not performed yet in the process will be documented on the Part C record generated for the failed NDT. All blocks for NDT not yet performed will be left blank on this sheet.

BLOCK 32 - REMARKS

(ALL) Enter remarks. Add or refer to any expansion requirements here or in Block 11. Each entry shall contain signature, printed name, and date except where the entry is pre-printed on the form by P&E.

BLOCK 33 - WELD SUPERVISOR

(WELD SUPERVISOR) Certify final disposition of all welding and NDT for the joint listed in Block 1 by entering signature, printed name and date.

NOTE: WHEN PERFORMING RECORD REVIEW, ALL CERTIFICATION DATA TO REPAIR DEFECTS (I.E., DEFECT EXCAVATION INFORMATION, REPAIR WELD HISTORY, FINAL NDT OF DEFECTS AND CERTIFICATION SIGNATURES, ETC.) ARE DOCUMENTED ON ASSOCIATED PART C RECORDS FOR THE JOINT AND PAGE NUMBERING IS CORRECT, INCLUDING ANY PART C RECORDS.

BLOCK 34 - QAS (SUBSAFE/SOC/REC ONLY)

(QAS) Enter signature, printed name, and date to certify completeness of entries for joints listed in Block 1.

STRUCTURAL WELD HISTORY CONTINUATION SHEET:

Follow corresponding block instructions in this attachment except as noted below:

(WELDER) Transcribe entries from the associated Part B record (sheet 1) onto the continuation sheet for Blocks 1, 4, 5 and 6.

BLOCK 13 - WELD PROCEDURE, REV, CH, AND TECHNIQUE SHEET(S)

(WELDER) Check the box provided if the weld procedure and technique sheet (if applicable) used for the Block 19 phase(s) is the same as shown on the associated Part B record (sheet 1). Otherwise, enter the weld procedure and technique sheet (if applicable) used for the Block 19 phase(s) that you are documenting on the continuation sheet.

(This Page Intentionally Left Blank)

STRUCTURAL DEFECT RECORD
QA FORM 20B (PART C)

1. JOINT NO.	2. SHEET OF
3. SHIP HULL NO.	4. JCN
5. CWP/REC: ☐ YES ☐ NO	

6. METHOD OF REJECTED INSPECTION: ☐ PT ☐ MT ☐ UT ☐ VT ☐ RT ☐ OTHER (SPECIFY):

7. DESCRIPTION OF DEFICIENCY (NUMBER EACH DEFICIENCY WITH AN INDICATION NUMBER):

☐ SEE REPORT NO.

8. ALL AREAS REQUIRING INSPECTIONS ARE SATISFACTORY EXCEPT AS NOTED IN BLOCK 7 INSPECTOR (SIGNATURE/DATE):

REPAIR

9. NDT EQUPMENT (FOR ET OR MT, RECORD SERIAL # OR MANF & MODEL NO.) (FOR MT BY YOKE, ENTER "YOKE", FOR PT, ENTER TYPE OF LIQUID PENETRANT).

A: B: C:

10. IND NO.	11. DEFECT REMOVAL (SIGNATURE/DATE)	12. NDT	13. NDT EQUIP LTR	14. REASON FOR REJECT OR EXCAVATION (LENGTH, WIDTH, DEPTH)	15. FINAL NDT FOR DEFECT REMOVAL. ENTER "A", "R" OR "W". SEE BLOCK INSTRUCTIONS.	SIGNATURE/DATE

☐ (SEE ADDITIONAL STRUCTURAL DEFECT RECORD)

WELD HISTORY

16. WELD PROCEDURE, REV., CH, AND TECHNIQUE SHEETS: ☐ SAME AS ORIGINAL	17. MIN PREHEAT:	18. MAX INTERPASS:

19. WELD FILLER MATERIAL (WELDER) ENTER TRACEABLE FILLER MARKING (MIC NO.)

LETTER	GRADE/TYPE	MIC NO.	LETTER	GRADE/TYPE	MIC NO.
A			C		
B			D		

20. PHASE LETTER KEY: F=BUILDUP OF BASE MATERIAL FOR FIT-UP; W=TACKING OR WELDING JOINT; BG=BACKGOUGE WORKMANSHIP SAT. (VERIFY BG NDT PRIOR TO WELD IF REQD)

21. IND NO.	22. PHASE LETTER	23. FILLER LETTER	24. PREHEAT & INTERPASS TEMP	25. WELDER (SIGNATURE/DATE)	26. REMARKS
			☐ SAT		
			☐ SAT		
			☐ SAT		
			☐ SAT		
			☐ SAT		
			☐ SAT		

☐ (SEE ADDITIONAL STRUCTURAL DEFECT RECORD)

27. IND NO(S).	28. COMPLETE & READY FOR NDT - CRAFTSMAN (SIGNATURE/DATE)	27. IND NO(S).	28. COMPLETE & READY FOR NDT - CRAFTSMAN (SIGNATURE/DATE)

REQUIRED NDT

29. IND NO.	30. REQD NDT (TYPE & METHOD)	31. NDT & ACCEPTANCE PROCEDURE, REV, CH	32. NDT RPT/EQPT (FOR ET OR MT, RECORD SERIAL # OF MANF & MODEL NO.) (FOR MT BY YOKE, ENTER "YOKE"). FOR PT, ENTER TYPE OF LIQUID PENETRANT, FOR RT/UT, ENTER REPORT #	33. RESULTS A OR R	34. INSPECTOR (SIGNATURE/DATE)

☐ (SEE ADDITIONAL STRUCTURAL DEFECT RECORD)

35. REMARKS

(This Page Intentionally Left Blank)

QA-20B PART C FLOWCHART

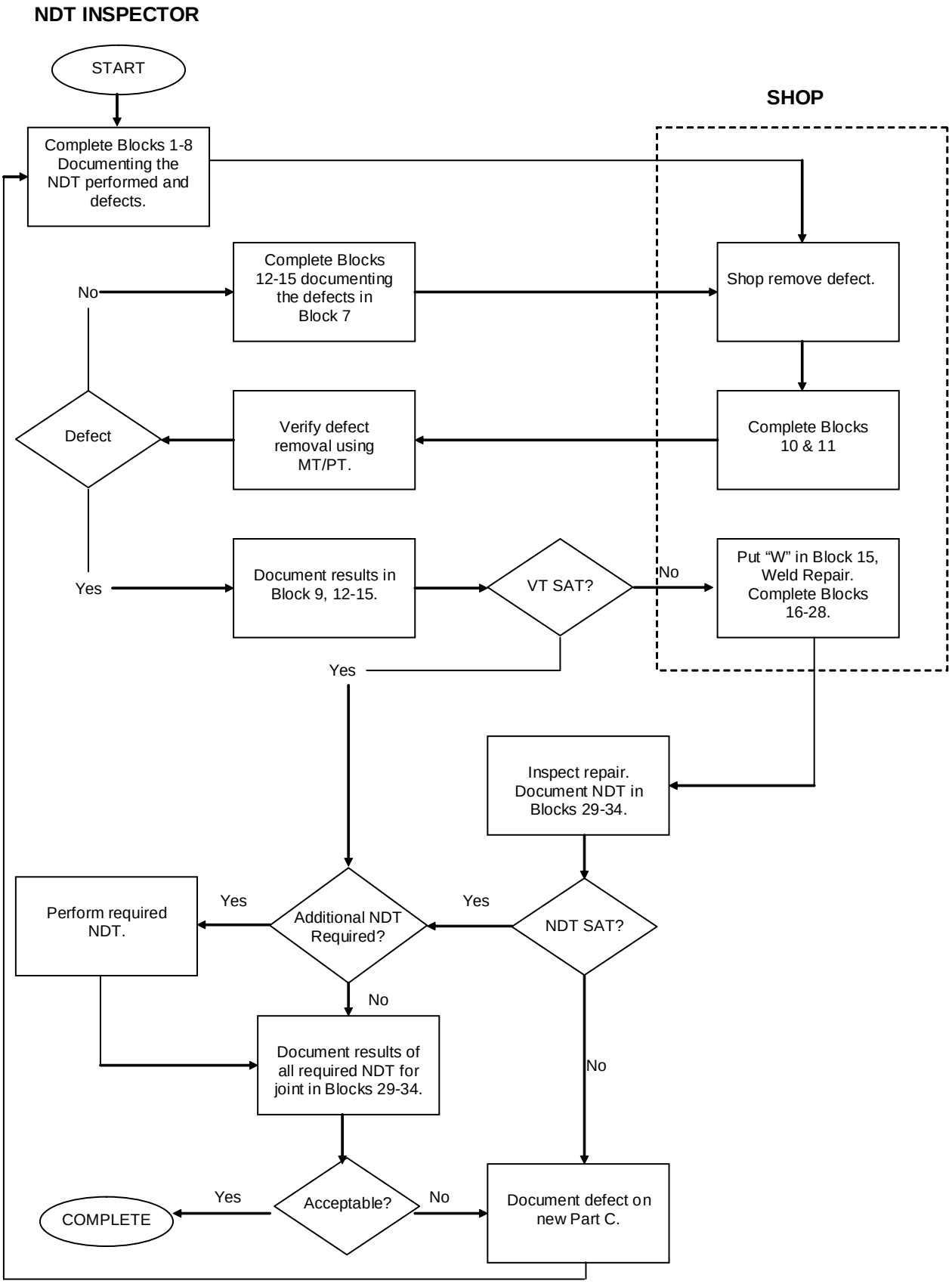

(This Page Intentionally Left Blank)

QA FORM 20B (PART C) INSTRUCTIONS

STRUCTURAL DEFECT RECORD

PURPOSE: To document defect completion data noted by failed NDT associated with a QA Form 20B Part A, Part B, or (if continued repair cycles are necessary) other Part C records. This form is only required for defects on the skin of the ship.

PROCEDURE: The numbered blocks on the QA Form correspond with instructions listed below. The P&E organization shall complete Blocks 17, 18 (in special situations) and 35 (if necessary). The blocks/rows of this record may be expanded to suit the work being documented. Unused rows for multiple entries (i.e., Blocks 10-15) may be deleted as necessary such that the form fits on a single page. If unable to keep on a single page a continuation sheet shall be used.

NOTE: EACH SIGNATURE WILL BE ACCOMPANIED BY A PRINTED NAME AND DATE. AN EMPLOYEE'S INITIALS MAY BE USED PROVIDED THEIR SIGNATURE AND PRINTED NAME APPEAR ELSEWHERE ON THE SAME PAGE.

NOTE: BLOCKS 1 - 10 WILL BE FILLED IN BY THE NDT INSPECTOR.

BLOCK 1 - JOINT NO.

Enter Joint Number.

BLOCK 2 - SHEET

Enter the sheet number of Part C record and additional Part C records generated and total number of sheets generated, (e.g., 1 of 2) at the time of completion. Sheet numbers for Part A, B and C records are not associated. They are unique only to the record, Part A, B, or C, that you are dealing with.

BLOCK 3 - SHIP/HULL NO.

Enter the ship name and hull number.

BLOCK 4 - JCN

Enter the Job Control Number (JCN).

BLOCK 5 - CWP/REC NO.

Check the [ ] N box if a CWP or REC is not required. Check the [ ] Y box if CWP or REC is required, and enter CWP or REC number. This information can be obtained from the associated Part A or B record.

BLOCK 6 - METHOD OF REJECTED INSPECTION

Check the box or indicate what NDT method has rejected.

BLOCK 7 - DESCRIPTION OF DEFICIENCY

Sketch, describe, or reference supporting documents to show defects. Label defects with an indication number. The numbering scheme must be consistent throughout the record.

BLOCK 8 - INSPECTOR

The inspector that rejected the NDT shall sign name and date for the NDT with exceptions for defects noted. (Signature certifies that all areas requiring inspection are satisfactory, except as noted in Block 7). If associated records are used to document acceptance, refer to the applicable records (e.g., RT, UT records).

BLOCK 9 - NDT EQPT

Enter equipment number or "YOKE" when MT is performed by Yoke method, or PT penetrant as directed on the form. The letters are to be annotated in Block 13 to correlate the equipment used with the NDT being performed. Check the box "[ ] (SEE ADDITIONAL STRUCTURAL DEFECT RECORD)" in the REPAIR section of the form when Block 10 has insufficient rows for the required number of entries.

BLOCK 10 - IND NO.

For each NDT performed on the repair excavation, list the indication number associated with the NDT being performed.

BLOCK 11 - DEFECT REMOVAL

(CRAFTSMAN) Enter signature and date for defect removal certifying the defect has been removed and the site is ready for VT and other NDT to verify defect removal.

NOTE: THE PURPOSE OF BLOCKS 12-15 IS TO DOCUMENT THE STEPS TAKEN TO EITHER BRING THE DEFECT TO THE POINT OF BEING CLEARED WITH NO ADDITIONAL ACTION OR TO THE POINT THAT REQUIRES WELD REPAIR.

BLOCK 12 - NDT

(INSPECTOR) Enter the NDT performed on the excavation site using one line per NDT entry. This shall include all VT and other NDT performed to verify defect removal. Unless otherwise directed by TWD or DL, NDT of the excavation site to verify defect removal shall be as follows:

a. For defects discovered by VT, MT or PT, defect removal shall be verified by the NDT method (VT, MT or PT) that discovered the defect. All original required NDT must be accomplished and meet requirements to certify the weld.

b. For defects discovered by ET, RT, or UT, defect removal shall be verified by MT (Ferrous) or PT (Non-Ferrous). All original required NDT must be accomplished and meet requirements to certify the weld.

NOTE: THE MT OR PT PROVES SOUND METAL AFTER THE DEFECT IS REMOVED. ACTUAL DEFECT REMOVAL IS VERIFIED BY THE VOLUMETRIC INSPECTION THAT FOUND THE DEFECT (AFTER WELD REPAIR).

BLOCK 13 - NDT EQUIP LTR

(INSPECTOR) Enter the letter from Block 9 that corresponds to the equipment or penetrant used in the inspection. Enter N/A if not applicable.

BLOCK 14 - REASON FOR REJECT OR EXCAVATION

(INSPECTOR) If the inspection fails, indicate reason for failure (e.g., type, dimensions and location of indication). If it is a VT failure indicate length, width, and depth of excavation. To show locations, modify sketch/description in Block 7 if possible. Such modifications shall contain signature, printed name, and date.

BLOCK 15 - FINAL NDT FOR DEFECT REMOVAL

(INSPECTOR) Enter "A", "R", or "W" to indicate results of inspection and enter signature and date. "A" means the inspection is acceptable. "R" means reject, (i.e., defect is not removed). "W", which is entered by the VT inspector and means weld repair is required, (i.e., defect is removed but the weld does not meet criteria for completed weld). Check the box "[ ] (SEE ADDITIONAL STRUCTURAL DEFECT RECORD)" in the REPAIR section of the form when Block 10 has insufficient rows for the required number of entries.

BLOCK 16 - WELD PROCEDURE, REV, CH, & TECHNIQUE SHEET(S)

(WELDER) Check the box provided if Weld Procedure and Technique Sheet (if applicable) to be used for repair welding is the same as shown on the associated Part B record. Otherwise, before welding enter the Weld Procedure (including Revision and Change used for repair welding). Include Technique Sheet if applicable.

BLOCK 17 - MINIMUM PREHEAT

(WELDER) First, see Part A (Block 14) or B record (Block 14), to verify that no special heat restrictions apply. If no special restrictions apply, before welding enter the required minimum preheat temperature. If special heat restrictions apply, before welding, enter the preheat temperature applied as specified by the Part A or Part B record.

BLOCK 18 - MAXIMUM INTERPASS

(WELDER) First, see Part A (Block 14) Part B record, (Block 15), to verify that no special heat restrictions apply. If no special restrictions apply, before welding, enter the required maximum interpass temperature. If special heat restrictions apply, before welding, enter the interpass temperature applied as specified by the Part A or Part B record.

BLOCK 19 - WELD FILLER MATERIAL

(WELDER) Just prior to welding, enter grade/type (e.g., MIL-11018-M or 11018-M) and MIC Number (e.g., WCAF 9093 202A) of electrode used in repair welding. Filler letters A and B are provided so that the data needs only to be entered once for that electrode and its corresponding traceability number. Enter the filler letter, A or B, corresponding to the electrode used during the weld repair process in Block 23. The filler material recorded here is only applicable to this sheet. If an additional Part C sheet is used, the filler material used to document weld phases on that sheet is recorded in Block 19 of that sheet.

BLOCK 20 - PHASE LETTER KEY

No entry is required for this block. Use Phase Letter Key given to complete Block 22. NOTE: Check the box "[ ] (SEE ADDITIONAL STRUCTURAL DEFECT RECORD)" in the REPAIR section of the form when Block 21 or 22 has insufficient rows for the required number of entries.

BLOCK 21 - IND NO.

(WELDER) Enter the indication number(s) for the defect(s) that is/are being worked on.

BLOCK 22 - PHASE LETTER

(WELDER) Using the Phase Letter Key given, enter the phase being accomplished during the weld repair process in the PHASE LETTER blocks provided. For most repairs, the last entries for each indication must be "WC" (weld complete) and "AMB" (ambient temperature). Multiple phases may be accomplished and certified as one line item entry (e.g., "WC/AMB").

BLOCK 23 - FILLER LTR

(WELDER) Enter the letter corresponding to the filler material information entered in Block 19 of this sheet. If the phase does not involve the addition of filler material, enter NA.

BLOCK 24 - PREHEAT & INTERPASS TEMP

(WELDER) Check Preheat and Interpass Temperature for the phase being accomplished. Mark the block when satisfactory. Take corrective action if it is not satisfactory. Enter NA for phases that do not involve welding (e.g., WC and AMB).

BLOCK 25 - WELDER

(WELDER/WELDER SUPERVISOR) Enter signature, printed name, and date for the associated phase. Signing of this block certifies that all welding has been performed in accordance with the applicable welding procedure entered in Block 16, the traceability number of the filler material used is recorded in Block 19, Blocks 21 through 24 are completed and required information is correct, and that all weld workmanship inspection requirements have been satisfied. This signature shall be made based on personal observation. For Phase Welding Complete (WC), signature indicates welding is complete, all metal has been deposited, required weld soaks are completed, preheat is removed and weld meets workmanship inspection requirements. This signature shall be made based on personal observation or by normal trade supervisory controls. For Phase "AMB" enter military time that the weld reached ambient temperature (less than 125 Deg. F) in Block 26 and sign Block 25.

NOTE: THE AMBIENT TIME IS ONLY REQUIRED IF SUBSEQUENT NDT HAS A WAIT TIME, SUCH AS A 24 HOUR MT.

BLOCK 26 - REMARKS

(WELDER) Enter remarks if necessary. Ensure ambient temperature time is noted for the ambient temperature (AMB) phase after reaching ambient temperature (See note in Block 25 above). Each entry shall contain signature, printed name and date except (1), where the entry is pre-printed on the form by P&E, or (2) for ambient temperature time if "AMB" is listed in Block 22. These signature requirements are not necessary if the Block 26 entry is made by the welder who has signed for the acceptance requirements in Block 25.

BLOCK 27 - IND NO(S).

(CRAFTSMAN/SUPERVISOR) Enter indication numbers that you are certifying ready for NDT in Block 28. The block is large enough to enter several indication numbers. Two blocks are provided if different craftsmen are signing for different indications. Unused blocks may be left blank.

BLOCK 28 - COMPLETE & READY FOR NDT

(WELDER, WELDER SUPERVISOR or CRAFTSMAN) Enter signature, printed name, and date when the weld is ready for final NDT (i.e., meets workmanship inspection requirements). This signature shall be made based on personal observation or by normal trade supervisory controls. This block may be signed by other than welder for non-weld issues.

NOTE: THE PURPOSE OF BLOCKS 29-34 IS TO PICK-UP THE JOINT NDT PROCESS AT THE POINT THE PART C RECORD WAS GENERATED AND TO DOCUMENT THE PROCESS FROM THAT POINT FORWARD. CHECK THE BOX "[ ] (SEE ADDITIONAL STRUCTURAL DEFECT RECORD)" IN THE REPAIR SECTION OF THE FORM WHEN BLOCK 29 OR 30 HAS INSUFFICIENT ROWS FOR THE REQUIRED NUMBER OF ENTRIES.

BLOCK 29 - IND NO.

(INSPECTOR) At the point the Part C record was generated, some required NDT may have already been completed and certified except for indications noted in Block 7. Other required NDT may yet need to be performed on the entire joint. Make block entries as follows:

a. For inspections of repairs to clear indications in Block 7, list the indication number you are inspecting.

b. For inspections on the entire joint that are not yet completed on a Part A or Part B Record, enter "N/A" beside the required NDT. The N/A entry means the required NDT applies to the entire joint.

BLOCK 30 - REQUIRED NDT

(INSPECTOR) List all required NDT to certify the defect you are inspecting as follows:

a. Ensure all the required NDT for the entire joint is documented and certified, including NDT previously certified on previous Part A, Part B, or Part C records (if required by local instruction), and all other NDT required to complete the joint, plus repair NDT. On the Part C record, at a minimum, list all NDT required to clear the defect and any remaining (not previously certified) NDT required to certify the joint. All NDT required, (previously certified and repair NDT) may be listed if required by local instructions. Required NDT can be found in Block 21 of the Part A record, in Block 27 of the Part B record, or in Block 30 of other Part C records generated for previous repair cycles. See discussion on expansion requirements in Block 35.

b. On rare occasion the required NDT may change. In this case, the substituted NDT shall be listed, not the original required NDT. These changes may be specified by P&E through TWD revisions.

BLOCK 31 - NDT & ACCEPTANCE PROCEDURE REV, CH

(INSPECTOR) Enter the NDT methods and acceptance standard procedure used for the NDT listed in Block 30.

BLOCK 32 - NDT REPORT, EQUIPMENT

(INSPECTOR) The purpose of this block is to record data for equipment or PT penetrant used. Enter equipment or PT penetrant information for the required NDT listed in Block 30 as directed on the form or list the NDT Report number that gives this information. Enter "Yoke" when performing an MT by yoke method. Equipment information is not required for MT by yoke. If the NDT listed is NDT previously completed satisfactorily and does not have to be repeated, enter "See Part (A or B or C)" as applicable. If "MT EXCAV", "MT BACKGOUGE" or "MT EVERY LAYER" is the NDT listed in Block 27, "Entry Not Required" may be entered in Block 29. (See example of Part B form). NA VT only inspections.

BLOCK 33 - RESULTS A OR R

(INSPECTOR) Enter "A" for accept or "R" for reject to indicate the inspection result. For NDT that has been accepted up to this point in the process enter "A". In this case, your entry is based on entries and certification signatures made on associated Part A, B, or C records.

BLOCK 34 - INSPECTOR

Enter signature, printed name, and date for entries in Blocks 29 through 33. Your signature for previous, acceptable NDT is based on entries and certification signatures made on associated Part A, B, or C records.

BLOCK 35 - REMARKS

(ALL) Enter remarks. Expansion requirements should be documented or referred to in this block. Each entry shall contain signature, printed name and date except where the entry is pre-printed on the form by P&E.

NOTE: EXPANSION REQUIREMENTS MAY BE SPECIFIED BY P&E THROUGH TWDS.

PIPE, MACHINERY AND PRESSURE VESSEL WELD RECORD Page 1 of ____

QA FORM 20C (NEW 09/05) (WORK PLANNING TO FILL IN BLOCKS/EVALUATE BLOCK OPTIONS IDENTIFIED BY A ♦ PRIOR TO RELEASE)

♦1. SHIP ♦HULL NO.	♦2. JCN			♦3. LWC/SHOP	♦4. CWP/REC SER NO.
♦5. SYSTEM/COMPONENT	♦6. FABRICATION STD: ☐ 278 ☐250-1500-1	♦7. WELD CLASS	♦8. JT DESIGN	♦9. SSMAP/JT ID DWG & REV	♦10. JOINT NO. ☐ MARK JNT

11. PART NO. 1	♦DESCRIPTION	♦SIZE (NPS)	♦SCHED/CLASS	PART NO. 2	♦DESCRIPTION	♦SIZE (NPS)	♦SCHED/CL.
♦DWG NO. & REV.		♦PC. NO.	♦MATL.	♦DWG NO. & REV.		♦PC. NO.	♦MATL.

INSTALLATION

12. PART NO. 1 ☐NEW	☐EXISTING ☐EXST MATL MKS ☐GEN MATL TEST MATERIAL MRKS/TEST RESULT:	PART NO. 2 ☐NEW	☐EXISTING ☐EXST MATL MKS ☐GEN MATL TEST MATERIAL MRKS/TEST RESULT:

NEW MATERIAL (INCLUDING CONSUMABLE INSERTS, BACKING MATERIAL, ETC.)

13. PART NO.	14. DESCRIPTION	15. LEVEL I NO./OTHER TRACEABILITY NUMBER/ MATERIAL/SPECIFICATION MARKINGS	16. FITTER/INSPECTOR (Signature, Badge, Date)

17. PART	WALL THICKNESS: ♦18. REQD	19. ACTUAL	PREWELD NDT	JOINT DESIGN INSTALLED	♦20. FITUP:		21. VERIFICATION
NO. 1	♦Nom: ♦ Min:	Min:	☐COMP		☐ SAT	**FITUP AFTER TACK ☐ SAT**	FITTER (Signature, Badge, Date)
NO. 2	♦Nom: ♦ Min:	Min:	♦☐NA			**♦☐ NA**	INSPECTOR (250-1500-1 welds) (Signature, Badge, Date)

WELDING

22. WELD PROC/REV/CH & TECH DATA SHEET	23. POSITION HFP VFP OOP	24. MIN PREHEAT TEMP: MAX INTERPASS TEMP:	25. FABRICATION LOCATION: SHOP/BLDG _____ **SHIPBOARD** COMPT: FRAME LEVEL P C S

26. LAYER(S) (T/R/I/F)	27. FILLER TYPE	28. FILLER SERIAL NO. (e. g., Level I No.)		29. WELDER (Signature, Badge, Date)
			☐SAT	
			☐SAT	
			☐SAT	
			☐SAT	

♦30. STRESS RELIEF REQD ☐ YES ☐ NO	31. PROCEDURE: _____ TEMPERATURE: DURATION HR MIN	32. HEAT TREATER (Signature, Badge, Date)
33. WELDING COMPLETE, SURFACE IS PREPPED AND READY FOR FINAL NDT, AND JOINT NUMBER IS PERMANENTLY MARKED NEAR JT IF "MARK JT" BOX IN BLOCK 10 IS CHECKED.	WELDER or FITTER (Signature, Badge, Date)	

WELD INSPECTIONS: (I) = INTERMEDIATE, (F) = FINAL # = PREWELD INSPECTION (EXCAVATION, END-PREP, ETC.) ## = NUCLEAR ONLY

♦34. **ACCEPTANCE STANDARD**:		♦CLASS	
♦35. INSP	♦36. INSPECTION TYPE	37. PROCEDURE USED	38. INSPECTOR (Signature, Badge, Date)
♦☐_____# ☐NA	♦☐5X ☐ RT ☐PT TYPE II-C ☐MT EQPT NO: _____		☐SAT ☐REJ
♦☐TACK ## ☐NA	♦☐VT ☐5X ☐PT TYPE II-C ☐MT EQPT NO: _____		☐SAT ☐REJ
♦☐ROOT ☐NA	♦☐VT ☐5X ☐PT TYPE II-C ☐MT EQPT NO: _____		☐SAT ☐REJ
♦☐BKGOUGE ☐NA	♦☐5X ☐PT TYPE II-C ☐MT EQPT NO: _____		☐SAT ☐REJ
♦☐PT/MT (I) ☐NA	♦☐PT TYPE II-C ☐MT EQPT NO: _____		☐SAT ☐REJ
♦☐VT (F) ☐NA	♦OUTSIDE (ALL VTs) ☐ INSIDE INACCESSIBLE ☐ INSIDE ☐ PARTIAL INSIDE INSP		☐SAT ☐REJ
♦☐PT/MT (F) ☐NA	♦☐24 HR. MT ☐PT TYPE II-C ☐MT EQPT NO: _____		☐SAT ☐REJ
♦☐PT/MT-ID ☐NA (F)	♦☐PT TYPE II-C ☐MT EQPT NO: _____ ☐ INACCESSIBLE ☐ PARTIAL INSP DONE		☐SAT ☐REJ
♦☐RT (F) ☐NA	♦☐8 HR. ☐60 ☐360 ☐100%		☐SAT ☐REJ

39. **REMARKS (SHOP REMARKS ALSO)**

FINAL DISPOSITION	40. SUPERVISOR (Signature, Badge, Date)	41. LOCAL GOVERNMENT INSP./QAS (Signature, Badge, Date)

PIPE, MACHINERY AND PRESSURE VESSEL WELD RECORD - CONTINUATION SHEET
QA FORM 20C - 1

SHIP: DWG/JCN: JOINT NO.: PAGE OF

WELD HISTORY (CONTINUATION SHEET) T = TACK R= ROOT I = INTERMEDIATE LAYER F = FINAL

42. LAYER T/R/I/F	43. FILLER TYPE	44. FILLER SERIAL NO. (MIC NO.)	45. WELD TEMPS DEG F PREHEAT	INTERPASS	46. WELDER (SIGNATURE/DATE)

WELD INSPECTIONS (CONTINUATION SHEET) I = INTERMEDIATE F= FINAL

47. INSPECTION	48. INSPECTION TYPE	49. PROCEDURE USED	50. INSPECTOR (SIGNATURE/DATE)
			☐ SAT ☐ REJ
			☐ SAT ☐ REJ
			☐ SAT ☐ REJ
			☐ SAT ☐ REJ
			☐ SAT ☐ REJ
			☐ SAT ☐ REJ
			☐ SAT ☐ REJ
			☐ SAT ☐ REJ

51. REMARKS

PIPE, MACHINERY AND PRESSURE VESSEL WELD RECORD – WELD DEFECT REPAIR SHEET

QA FORM 20C-2

SHIP: DWG/JCN: JOINT NO.: PAGE OF

52. DEFECT DESCRIPTION

☐ CRACK	☐ INCOMP INSERT FUSION	☐ INCOMPLETE FUSION	☐ ARC STRIKE	☐ ROUNDED
☐ SLAG	☐ CRATER PIT	☐ BURN THRU	☐ WELD SPLATTER	☐ OTHER: (ENTER BELOW)
☐ POROSITY	☐ INTERNAL CONCAVITY	☐ MELT THRU	☐ ROOT EDGE FUSION COND	
☐ UNDERCUT	☐ INTERNAL CONVEXITY	☐ TUNGSTEN	☐ LINEAR	
☐ OXIDATION	☐ CENTERLINE CREASE	☐ INCOMPLETE PENETRATION	☐ LINEAR DISPOSED	

53. DEFECT LOCATION(S) AND EXTENT ☐ SEE SKETCH IN REMARKS	54. INSPECTOR (SIGNATURE/DATE)

DEFECT REPAIR

55. TYPE OF REPAIR	56. REPAIR LOCATION(S) AND EXTENT	57. WELD PROC AND REV/CH	58. EXCAV NDT REQUIRED	59. ROOT PASS INSP REQUIRED
☐ GRIND ONLY ☐ GRIND AND WELD ☐ WELD ONLY ☐ OTHER (SEE REMARKS)	☐ SEE SKETCH IN REMARKS	☐ NA ☐ SAME AS ORIGINAL	☐ Y (MARK REQD INSP BLK 65/66) ☐ N	☐ Y (MARK REQD INSP BLK 65/66) ☐ N

60. LAYER T/R/I/F	61. FILLER TYPE	62. FILLER SERIAL NO. (MIC NO.)	63. PREHEAT/ INTERPASS TEMP	64. WELDER (SIGNATURE/DATE)
			☐ SAT	
			☐ SAT	
			☐ SAT	

REPAIR INSPECTIONS

REPAIR WELD REQUIRES THE SAME INSPECTIONS AS THE ORIGINAL WELD. CARRY OVER ALL REJECTED OR VOIDED INSPECTIONS FROM PAGE 1.

65. INSPECTION	66. INSPECTION TYPE	67. PROCEDURE USED	68. INSPECTOR (SIGNATURE/DATE)
☐ EXCAV ☐ NA	☐ 5X ☐ PT TYPE IIC ☐ MT/EQUIP NO.:		☐ SAT ☐ REJ
☐ ROOT ☐ NA	☐ VT ☐ 5X ☐ PT TYPE IIC ☐ MT/EQUIP NO.:		☐ SAT ☐ REJ
☐ BACKGOUGE ☐ NA	☐ 5X ☐ PT TYPE IIC ☐ MT/EQUIP NO.:		☐ SAT ☐ REJ
☐ PT/MT (I) ☐ NA	☐ PT TYPE IIC ☐ MT/EQUIP NO.:		☐ SAT ☐ REJ
☐ VT (F) ☐ NA	☐ OUTSIDE (ALL VTs) ☐ INSIDE INACCESSIBLE ☐ INSIDE ☐ PARTIAL INSIDE INSP		☐ SAT ☐ REJ
☐ PT/MT(F) ☐ NA	☐ PT TYPE IIC ☐ 24 HOUR MT/EQUIP NO.:		☐ SAT ☐ REJ
☐ PT/MT – ID(F) ☐ NA	☐ PT TYPE IIC ☐ MT/EQUIP NO.: ☐ INACCESSIBLE ☐ PARTIAL INSP DONE		☐ SAT ☐ REJ
☐ RT (F) ☐ NA	☐ 8 HOUR ☐ 60 ☐ 360 ☐ 100%		☐ SAT ☐ REJ

69. REMARKS

(This Page Intentionally Left Blank)

QA FORM 20C INSTRUCTIONS

PIPE, MACHINERY AND PRESSURE VESSEL WELD RECORD/WELD DEFECT REPAIR SHEET

PURPOSE: This instruction provides a form to document in process controls for welding and NDT of piping, machinery, pressure vessels, shafting and propellers including base metal repair and repair of castings in accordance with NAVSEA S9074-AR-GIB-010/278 (NSTP-278), MILSTD-2191, DOD-STD-2185 or in accordance with NAVSEA 250-1500-1. This Form does not contain all required data for accomplishment of Titanium Welds. Additional data is required as specified in local documents.

NOTES:

1. WHEN ADDITIONAL NDT AND OPERATIONAL TESTING (IN LIEU OF HYDROSTATIC STRENGTH TESTING) OF WELDED PIPE JOINTS IS SPECIFIED PER CHAPTER 505 OF NAVSEA S9086-RK-STM-010/CH505, PIPING SYSTEMS FOR NSTP-278 CLASS P-1 JOINTS, THE CWP/TGI SHALL CLEARLY SPECIFY THAT ADDITIONAL NDT IN LIEU OF HYDROSTATIC TESTING IS REQUIRED. ROOT LAYER SHALL BE PT OR MT INSPECTED. THE 5X VISUAL INSPECTION SUBSTITUTION ALLOWED BY NSTP-278 IS NOT PERMITTED. THE FINAL LAYER SHALL BE PT INSPECTED; MT IS NOT PERMITTED.

2. PLANNER SHALL COMPLETE THE BLOCKS IDENTIFIED BY A RED DIAMOND PRIOR TO ISSUING.

3. PER NAVSEA S9074-AR-GIB-010-278, WHEN A SPECIFIC ITEM ON A RECORD IS NOT APPLICABLE THE LETTERS "NA" SHALL BE ENTERED. IF A LINE ITEM HAS A "NA" BLOCK, CHECKING THE BLOCK MEETS THE INTENT OF ENTERING "NA" FOR THE REMAINDER OF THE BLOCKS FOR THAT LINE.

SCOPE: This weld record is required for NSTP-278 A-F, A-1, A-2, A-3, A-LT, P-1, P-LT, M-1, and T-1 welds, SUBSAFE welds, SOC welds, welding per MIL-STD-2191 (Main Shafts) and DOD-STD-2185 (Propellers) and other welds as required by the local Engineering authority.

PROCEDURE: Production and QA personnel make entries in QA form 20C as required below. Signatures verify that all entries in the associated line item are correct. When adding Continuation or Repair Sheets, enter the Ship (from Block 1), Map Drawing Number (from Block 9) or JCN (from Block 2) if there is no Map Drawing and the Joint Number (from Block 10). Enter the page number, starting with page 2, for each supplemental sheet (Continuation Sheet or Defect Repair Sheet) associated with the joint.

PIPE, MACHINERY AND PRESSURE VESSELS WELDING DETAIL/NDT RECORD IDENTIFICATION SECTION

BLOCK 1 - SHIP HULL

Enter ship's name and hull number.

BLOCK 2 - JCN

Enter Job Control Number.

BLOCK 3 - LWC/SHOP

Enter LWC.

BLOCK 4 - CWP/REC SER NO.

Enter REC serial number or NA as applicable. Do not list the REC Rev.

BLOCK 5 - SYSTEM/COMPONENT

Enter system and/or component to be welded, (e.g., Main Sea Water, 1MS-V23, HP Air flask, or #2 propulsion shaft).

BLOCK 6 - FABRICATION STD.

Mark the governing fabrication standard, NSTP-278 or NAVSEA 250-1500-1. For other Fabrication standards (MIL-STD 2191, DOD-STD-2185) enter an asterisk or other identifying mark and record procedure in the Remarks block.

BLOCK 7 - WELD CLASS

Enter applicable weld class from NSTP-278 fabrication standard (e.g., P-1, A-2). Enter classification for NAVSEA 250-1500-1 welds.

BLOCK 8 - JT DESIGN

Enter joint design. This can be a MIL-STD-22D or NAVSEA 250-1500-1 joint number, a joint design from a drawing or technical manual or a description such as "Build-up" or "Seal Weld". More than one joint design may be entered if allowed by drawing, NSTP-278, the Weld Procedure and local policy. If necessary, enter "RMKS" and list allowed joint design(s) in the Remarks section.

BLOCK 9 - SSMAP/JT ID DWG & REV

Enter map drawing or joint identification drawing. Enter NA if there is no map or joint identification drawing. Note that most submarine work requires that P-1 joints are mapped to a drawing that is included in the Ship's Drawing Index. See Deep Diving General Overhaul Specifications (DDGOS) 9480-0-I.

BLOCK 10 - JOINT NO.

Enter joint number, including type (WB, WS etc.) if listed, from joint map drawing. Check the "Mark JT" block if the weld is not mapped. NSTP-278 requires weld joint marking of class A-F, A-1, A-2, A-3, A-LT, P-1, P-LT, M-1 and T-1 welds if not mapped. Fabrication/repair/cladding welds within components do not require marking if the weld location is clearly defined on the record such that the record is clearly applicable to only that location.

If there is no joint number/map drawing or other traceability from joint to record:

Check the "MARK JT" block if required by TWD and/or local instruction. This box identifies to the fitter that the joint shall be marked, usually by vibra-tool, scribe or etch.

Example: Enter the Level I Certifying Activity Designator (CAD) letter(s) followed by a five digit date number and a joint number. The date number is the two-digit year plus the Julian day when the record is created. A job at Norfolk Naval Shipyard that installs one elbow would need two joint numbers for records created on May 14 1999, N-99134-1 and N-99134-2. (The joint number is unique to the applicable job (JCN). Each job starts a new series so there is no need for joint number logs or pre-allocation of joint numbers).

BLOCK 11 - PART DESCRIPTION

a. Enter information for each part to be joined or repaired.

b. Enter description of piece (e.g., pipe, valve, clevis, plate, etc.).

c. Enter NPS pipe size and schedule or class (pipe welds only, NA others including pipe fittings).

d. Enter arrangement drawing (preferred) or diagram and applicable revision.

e. Enter piece number from drawing just entered (enter NA if there is no pc no.).

f. Enter the base material type (normally from drawing) and the S-Group Number (e.g., ASTM A 178, Grade A (S-1), CUNI-70:30 (S-34), CRES 316 (S-8), 1-1/4Cr 1/2Mo (S-4)). S-group numbers are obtained from Table (1) of NSTP 278. Specify CRES by grade, Aluminum by grade and temper and Inconel (S-43) as either 600 or 625. In addition, for carbon steels (Group S-1) with carbon content greater than 0.30%, make a note of the maximum carbon content in the Remarks block. Include material spec if known (e.g., QQ-N-281, ASTM A182 F11). For new material, P&E verifies that information in Block 11, especially for material type, matches material ordering information in TWD. Use the Remarks block if additional space is needed.

NOTE: FOR BASE METAL REPAIRS, NORMALLY ONLY INFORMATION FOR PART 1 IS COMPLETED. ENTER "NA" IN PART 2 BLOCKS. FOR BASE METAL REPAIRS INVOLVING MORE THAN ONE MATERIAL TYPE, SUCH AS A REPAIR TO CU-NI BASE MATERIAL THAT TIES INTO AN ADJACENT NI-CU CLADDING, INFORMATION FOR BOTH MATERIALS SHALL BE COMPLETED AS PART 1 AND PART 2.

INSTALLATION SECTION

NOTE: THE PURPOSE OF BLOCK 12 IS TO CONFIRM THE MATERIAL OF EACH PART IS THE SAME AS LISTED IN BLOCK 11.

BLOCK 12 - PART NO.1 AND PART NO.2

(Welder) Check New or Existing for each part. If the part is new, no further action is required. If existing, check the method used to verify the material and annotate the existing material markings found or the results of the generic material test in the results section. For base metal repairs, Part 2 will be left blank if Part 2 of Block 11 is blank as only one part exists.

BLOCK 13 - PART NO.

(Welder) Enter part number from Block 11 for each new part. Enter "NA" for backing rings or consumable inserts which are not included in Block 11.

BLOCK 14 - DESCRIPTION

(Welder) Enter piece description either from Block 11 or for additional pieces, such as backing rings or consumable inserts which do not have a part number.

BLOCK 15 - LEVEL I NO./OTHER TRACE NO./MATERIAL/SPECIFICATION MARKINGS

(Welder) For all new material, enter the material type (e.g., 316L, Inconel 625, ASTM A106 Grade B, etc.) when this information is on the piece or its accompanying tag or documentation. In addition, the following information is required:

a. For new material in applications requiring traceability markings (e.g., Level I, SOC, etc.), enter the traceability marking.

b. For new material not requiring traceability marking and not having a material type evident, enter the information required by Table 1 below (this would normally be the stock number).

TABLE 1- DOCUMENTATION REQUIREMENTS	
Material Control Level	**Required Information**
Level I Material Other Than Fasteners	MIC Number and any other traceability number, including any local traceability number (e.g., PNSY MLN – examples Z142, AB12)
Level I Fasteners	Either the MIC number or Material Marking, Color Code, Heat/Lot Number, and Manufacturers Symbol (Note: For nuts containing a self-locking insert, the color of the insert is the Manufacturer's symbol)
Controlled Structural Material And SOC Control Division "A" Material	Traceability Number
SOC Control Division "B" Material	Markings providing identification to material type or specification
AERP And Other Rotatable Pool Material (688 Class, TRIPER, Etc.)	Enter the appropriate rotatable pool serial number (e.g., RP-148A, 4810-013-5812-A3-0113, TIN -292-11893, etc.)
Transferred And Cannibalized Material	Enter the Equipment Removal List No. or other material History/ Traceability number (ERL# XXXX, SSBN-600 EHF #24, etc.)
Other Material Within The LEVEL I/SUBSAFE Boundary And SOC Control Division "C" Material	1. Enter at least one of the following documentation attributes: a. Stock Number (from package/container) b. Part Number (from package/piece) c. Part Number and associated Manufacturing Work Procedure (for manufactured items) d. Local Traceability Number (from piece/tag) e. Drawing and Piece Number (from piece/tag) f. Generic, MIL-SPEC, or Material Specification Marking (from piece) g. NDT record numbers or test results for items verified by generic material testing 2. For SOC components only: Enter the stock number of the "O"-ring lubricant or any sealant used during assembly

c. If an alternate material is authorized enter an asterisk or other identifying symbol and provide authorization (e.g., DFS #) in Block 39 (Remarks).

d. For consumable inserts, enter the type (e.g., MIL-67) marked on the insert, the insert size and the Level I or certified material number from the tag.

BLOCK 16 - FITTER/INSPECTOR

Sign to verify that Block 15 entries match the markings on the piece or tag and to verify that the material matches that required by Block 11. Where material type is not annotated on the piece or its accompanying tag/documentation, material verification is accomplished by matching the identifying marking on the tag/documentation against the ordering information specified in the TWD.

BLOCK 17 - PART

No entry. Part numbers correspond to Block 11.

BLOCK 18 - WALL THICKNESS REQUIRED

Enter nominal wall thickness for piping and piping fittings.

NA may be entered for non-piping applications which are greater than ½ inch thick, or pipe socket fittings, valves, piping drilled after boss installation or piping passing through sleeves.

Nominal wall thickness is the nominal wall thickness for the associated system piping. Minimum allowable piping installation wall thickness is that provided by the installation drawing or can be calculated by subtracting 10% from the nominal wall thickness. Tubing specifications generally specify a minimum wall thickness only. For NAVSEA 250-1500-1 welds and if required by local direction for NSTP-278 welds, the nominal wall thickness for tubing should be calculated by adding 10% to the tubing minimum wall thickness. If the basis for minimum wall thickness is different from above, document the special basis in the Remarks.

Enter minimum allowable installation thickness.

BLOCK 19 - WALL THICKNESS ACTUAL

(Welder) Enter minimum measured thickness after end preparation. "NA" may be entered for non-piping applications which are greater than ½ inch thick, or pipe socket fittings, valves, piping drilled after boss installation or piping passing through sleeves.

For casting repairs, record the wall thickness adjacent to the defect (excavation area). A sketch showing the size (length, width, and depth) and location of all nominal and special repair will be entered per the directions for the REMARKS section (Block 39).

BLOCK 20 - FITUP

Planner mark PREWELD NDT and FITUP AFTER TACK blocks "NA" when not applicable. Fitter check other appropriate blocks or make entry for:

a. Completion of any required pre-weld NDT - See Block 35 and 36 and the TWD.

b. Installed joint design - Annotate the joint design installed. The installed joint design shall be as specified in Block 8. If an alternate joint design is authorized enter an asterisk or other identifying symbol and provide authorization (e.g., DFS #) in Block 39 (Remarks). For base metal repair, sketch excavation in Remarks section. Sketches should include location, dimensioned from a reference surface or line, and length width and depth of excavation.

c. Satisfactory fit-up - This means that the fit-up meets the procedure requirements for the joint design, and that any scribe line or joint number marking (required if "MARK JT" in Block 10 is checked) is complete.

d. Satisfactory fit-up after tacking - If NA is not checked in advance by P&E, the SAT block will be checked after satisfactory fit-up after tacks by the NDT Inspector.

BLOCK 21 - VERIFICATION

(Fitter/NDT Inspector) Sign verification of proper fit-up.

WELDING SECTION

BLOCK 22 - WELD PROC/REV/CH & TECH DATA SHEET

(Welder) Enter weld procedure (including revision and change), tech data sheet or other welding instruction.

BLOCK 23 - POSITION

(Welder) Circle HFP (Horizontal Fixed Pipe), VFP (Vertical Fixed Pipe) or OOP (Out Of Position pipe) as applicable by local instruction.

BLOCK 24 - MIN PREHEAT

PREHEAT - (Welder) Enter minimum preheat temperature just prior to welding.

INTERPASS - (Welder) Enter maximum interpass temperature as measured during the process.

BLOCK 25 - FABRICATION LOCATION

(Welder) Enter location where work is performed. Compartment can be the damage control number or the common name such as UL MMR1, or Aux Machinery Space. Circle Port (P), Centerline (C), or Starboard (S).

BLOCK 26 - LAYER(S)

(Welder) Enter type of weld layer(s) (e.g., Tack (T), Root (R), Intermediate (I), or Final (F)). Record one line for each different welder/filler metal combination. (If a complete weld is done by the same welder, on the same day, using filler metal with the same traceability numbers, the layer may be indicated as T, R, I, F using only one line). However, the welder's signature is required prior to each specified inspection, (e.g., If a root PT or 5X is required, the R and I layers can not be on the same line). Intermediate layers shall be numbered (I1, I2, I3…) if needed, to record more than one filler metal lot or welder. Use continuation sheet if needed.

BLOCK 27 - FILLER TYPE

(Welder) Enter type of filler material used, (e.g., RN60, 9N10, etc.).

BLOCK 28 - FILLER SERIAL NO.

(Welder) Enter filler serial number (Level I numbers, traceability numbers) from filler or tag. Enter, "Non level I", for Non-level filler material.

BLOCK 29 - WELDER

(Welder) Sign, enter badge number and Date to verify that the entries made are correct and the weld is per the required procedure. For HY or HSLA welds enter the time and date that the weld reached ambient temperature in the remarks.

BLOCK 30 - STRESS RELIEF REQUIRED

Planner mark "Yes" if stress relief is desired for distortion control or is required by tech manual or drawing, otherwise mark "NO" block. If Block 30 is marked "NO", "NA" Blocks 31 and 32.

BLOCK 31 - PROCEDURE

Welder enter stress relief procedure used, temperature range and duration. Planner mark "NA" if Block 30 is marked "NO".

BLOCK 32 - HEAT TREATER

Heat Treater, sign to verify that the heat treatment was accomplished per the required procedure, temperature range and duration. Planner, mark "NA" if Block 30 is marked "NO".

BLOCK 33 - WELDER/FITTER

(Welder) (Fitter includes other trades as applicable). For welds that are machined or ground flush, include a sketch in the Remarks section including weld location from a reference surface or line, and the length and width of the weld prior to requesting NDT. Sign that all welding and surface preparation is correctly completed, reference line(s) and joint number (if checked in Block 10) are marked and weld is ready for NDT. The welder shall sign this block for weld workmanship if welding is performed and should be co-signed by the shop performing the final action on the joint (if other than the welder) prior to inspection as specified by local direction.

WELD INSPECTIONS SECTION

BLOCK 34 - ACCEPTANCE STANDARD/CLASS

Planner enter NDT acceptance standard (e.g., MIL-STD-2035 or NAVSEA 250-1500-1) and acceptance standard class (if applicable). (NDT acceptance standard classes for NSTP-278 welds are found in NSTP-278 Table XI).

BLOCK 35 - INSPECTION

Planner mark inspection(s) required. Mark NA for inspections that are not required. Note that first line allows writing in inspections, especially pre-weld inspections like excavations or end-preps. Mark MT/PT-ID for joints which require MT/PT and have an inside accessible surface (e.g., non-backing ring butt welds).

BLOCK 36 - INSPECTION TYPE

Planner mark the types of NDT (VT, 5X, PT, MT or RT). Mark "Inside" when required for welds that allow for inside inspections. For welding of HY/HSLA and STS materials indicate when 8 hour RT or 24 hour MT are required by marking appropriate box.

(Inspector) Record equipment numbers as appropriate. Line out Type II [Method] C if that type penetrant dye and method are not used and record substitute PT types and methods in the Procedure or Remarks block. If a yoke is used for MT write "Yoke" in place of the unique equipment identification. Mark "inaccessible" or "partial inspection done", as appropriate, if full inspection of inside surface cannot be accomplished.

BLOCK 37 - PROCEDURE USED

(Inspector) Record inspection procedure used.

BLOCK 38 - INSPECTOR

(Inspector) Mark "SAT" for satisfactory or "REJ" for rejection of required inspections. Do not mark either for inaccessible inspections. Sign verification for inspections required by Blocks 35 and 36. Rejection is required if an inspection shows rejectable conditions that have not been satisfactorily repaired by polishing or light grinding and reinspected. If an inspection is rejected add a Weld Defect Repair Sheet and complete Blocks 52-54. Carry rejected, voided, and incomplete inspections to Block 65 and 66. See Header instructions above for adding a Repair Sheet. If PT/MT-ID (F) in Block 36 is marked "inaccessible", the Inspector will enter signature and leave "SAT" and " REJ" check box blank.

BLOCK 39 - REMARKS

(All) Record additional relevant information as directed in this instruction, by work document or identified in-process. Appropriate remarks entries or sketches include: defect size and location, special weld joint designs, records of material weldability tests for casting repairs, or the additional records required for Titanium welding. Use a continuation sheet for additional space or reference a separate record. Each entry shall contain a signature, printed name and date except where the entry is pre-printed on the form by P&E.

FINAL DISPOSITION

BLOCK 40 - SUPERVISOR

The NDT Supervisor will enter printed name, signature, badge number and date signifying all information on the record (including any rejects and repairs) is technically acceptable and administratively correct. Enter total pages in the Heading.

BLOCK 41 - LOCAL GOVERNMENT INSP./QAS

For shipyard use only.

QA FORM 20C - CONTINUATION SHEET INSTRUCTIONS

WELD HISTORY

BLOCKS 42 - 46 - LAYER, FILLER TYPE, FILLER SERIAL NO., PREHEAT/INTERPASS TEMP, WELDER

(Welder) See instructions for Blocks 24 and 26-29. Note any changes in Remarks on continuation sheet.

WELD INSPECTION

BLOCKS 47 - 50 - INSP, INSPECTION TYPE, PROCEDURE USED, INSPECTOR

(Engineering/Planning/Inspector) See instructions for Blocks 35-38. Write out inspection type in Block 48. General instruction may be written in the Remarks section.

BLOCK 51 - REMARKS

(All) See Block 39 instructions for remarks. Each entry shall contain signature, badge number and date except where the entry is pre-printed on the form by P&E. Initials may be entered in lieu if an employee's signature appears elsewhere on the same page.

QA FORM 20C - WELD DEFECT REPAIR SHEET

DEFECT DESCRIPTION

BLOCK 52 - DEFECT DESCRIPTION

(Inspector) Place an "X" in the applicable defect description block that describes the defect.

BLOCK 53 - DEFECT LOCATION(S) AND EXTENT

(Inspector) Describe or sketch in remarks (Block 69) the defect location(s) and size(s). Defect location in reference to a permanent landmark is recommended.

BLOCK 54 - INSPECTOR

(Inspector) Verify that rejected inspections from page 1, continuation sheet or previous repair sheet are marked in Block 65 and 66 to be redone. Verify defect identification by signature.

DEFECT REPAIR

BLOCK 55 - TYPE OF REPAIR

(Welder) Mark type(s) of repair. Identify repair type (grind only, grind and weld, etc.). More than one repair type may be marked.

BLOCK 56 - REPAIR LOCATION(S) AND EXTENT

(Welder) Describe or sketch in Remarks section the repair locations and size (length, width and depth). Descriptions shall include distances and/or degrees from "0" reference points or lines to locate repairs. Note that generally the repair extends beyond the defect and this must be recorded.

BLOCK 57 - WELD PROC & REV/CH

(Welder) Mark "NA" if only grinding is needed for repair. Enter the weld procedure, revision and data sheet or mark "Same as original weld" if welding is required.

BLOCK 58 - EXCAVATION NDT REQUIRED

(Welder) Check if MT, PT or 5X VT is required for the excavation area. Also mark Blocks 65 and 66. Any weld repair which originally required final MT or PT requires MT, PT or 5X VT of repair excavations. Consult P&E or local facility engineering if there is any uncertainty about the repair inspection requirements.

BLOCK 59 - ROOT PASS INSPECTION REQUIRED

(Welder) Mark if a new root pass inspection is required (when all or part of the root is replaced), also mark Blocks 65 and 66 root pass inspections. Repaired root welds which originally required inspections shall require the same inspections when replaced or repaired. Consult P&E or local facility engineering if there is any uncertainty about the repair inspection requirements.

BLOCKS 60 - 64 - LAYER, FILLER TYPE, FILLER SERIAL NO., PREHEAT/INTERPASS, WELDER

See instructions for Blocks 24 and 26-29.

REPAIR INSPECTIONS

BLOCKS 65 - 68 - INSP, INSPECTION TYPE, PROCEDURE USED, INSPECTOR

(As Appropriate) In-process repairs of weld rejects generally require the same inspections as the original weld with the addition of inspection of the excavation needed to remove the defect.

The inspector is responsible to carry forward all inspections, from page 1, a Continuation Sheet or a previous Repair Sheet, which were rejected (see Block 38).

The welder will mark any additional inspections required due to the extent of the repair.

Excavations must be 5X VT, MT or PT inspected if MT or PT is a requirement of the finished weld. Root inspections must be accomplished if all or part of the root is redone. Also mark any intermediate layer inspections for repeat if these layers are removed by repair. These inspections must be done prior to covering by the repair. Blocks 58 and 59 serve to remind welders of this before the welding phase of the repair.

Previously accepted inspections shall be redone if a subsequent inspection requires rework that could affect the previous inspection result. Voided inspections shall be marked to be redone in the repair area. Any weld material removal for repair voids the completed finished surface inspections (F), VT, PT, MT, or RT inspections in Block 35.

Consult P&E, NDT Supervisor, or local facility engineering for repair inspection details. Note that your local activity may require that a discrepancy be clarified by a Liaison Action Request for formal direction or approved by a Departure from Specification prior to proceeding with in-process repair of welding defects.

BLOCK 69 - REMARKS

(All) Record additional details here, especially sketches of defect areas and repairs. Each entry shall contain signature, printed name and date except where the entry is preprinted on the form by P&E. Initials may be entered if a corresponding employee's signature appears elsewhere on the same page. Use a continuation sheet for additional space. See Block 39.

(This Page Intentionally Left Blank)

HYDROSTATIC/PNEUMATIC TEST RECORD

QA FORM 26 (9/05) Planning shall fill in blocks identified by a ♦ prior to issuing

♦1. SHIP HULL NO.	♦2. JCN	♦3. LWC/SHOP	♦4. CWP/REC SER NO.	♦5. SYSTEM/COMPONENT

♦6. REFERENCES (TEST PRESSURE DRAWINGS, REFERENCE MANUALS OR OTHER APPLICABLE REFERENCES)		
A.	B.	C.

♦7. REQUIRED TEST AND INSPECTION – SPECIFY TEST REQUIREMENTS [i.e., TYPE OF TEST, TEST FLUID, SPECIAL VALVE POSITIONS, DURATION, ACCEPTANCE CRITERIA, JOINTS TO BE TESTED (IF ENTIRE COMPONENT/SYSTEM IS TESTED, SO STATE)].

♦8. DIAGRAM OF TEST AREA INCLUDING GAGS AND BLANKS INSTALLED, VALVE POSITIONS, AND TEST GAGES/INSTR USED (DOCUMENT BELOW).

9. GAGE DATA	RANGE (PSIG)	SERIAL #	CAL DUE DATE
PRIMARY			
BACKUP			

♦10. REQUIRED TEST PRESSURE (PSIG) AND TEST DURATION:	11. ACTUAL TEST PRESSURE (PSIG) AND TEST DURATION:
12. TEST RESULTS (CHECK ONE):	☐ SAT ☐ UNSAT

13. REMARKS:

14. CERTIFICATION	
PERFORMED BY	INSPECTED BY
CRAFTSMAN SIGNATURE/BADGE NO. DATE	QA INSPECTOR/SHIPYARD REP SIGNATURE/BADGE NO. DATE

(This Page Intentionally Left Blank)

QA FORM 26 INSTRUCTIONS

HYDROSTATIC/PNEUMATIC TEST RECORD

PURPOSE: To document hydrostatic/pneumatic tests accomplished on piping systems or portions of a system to recertify the system after maintenance. It also provides a method for the FMA to specify the required retests for work they performed.

PROCEDURE: The numbered blocks on QA form 26 correspond with the instructions listed below. Any block not used will be marked NA. The planning organization shall fill in blocks identified with the diamond symbol prior to issuing the CWP.

BLOCK 1 - SHIP HULL NO.

Enter the ship's name and hull number.

BLOCK 2 - JCN

Enter the JCN.

BLOCK 3 - LWC

Enter the shop number of the LWC.

BLOCK 4 - CWP/REC SER. NO.

Enter the CWP/REC serial number or enter N/A if no CWP/REC is required. Do not list the CWP/REC revision.

BLOCK 5 - SYSTEM/COMPONENT

Enter the name of the system and component to be tested.

BLOCK 6 - TEST REFERENCES

Enter the applicable test reference and/or other applicable references (e.g., drawing number and revision used to obtain the required test pressure and conducting of the test).

NOTE: (FOR SUBMARINES ONLY) ENTER "S9505-AF-MMA-010/PIPING SYSTEMS" WHICH PROVIDES REQUIREMENTS FOR SHIP'S FORCE TO SET-UP AND CONDUCT TESTING.

BLOCK 7 - REQUIRED TEST AND INSPECTION POINTS

Enter the specific test requirements necessary to recertify the work. Specify test requirements (i.e., type of test, test fluid, special valve positions, duration, acceptance criteria, joints to be tested (if entire component/system is tested, so state)).

BLOCK 8 - DIAGRAM OF TEST AREA

Enter a diagram of the test area. Be specific. Include such things as relief valve locations, gage locations, blanks, gags, and valve positions, etc. The QAI will verify the diagram prior to performance of the test. For nuclear tests identify major components to be isolated or vented to preclude unnecessary pressurization.

NOTE: ALL VALVES WITHIN THE TEST BOUNDARIES MUST BE IDENTIFIED AND THEIR POSITION (OPEN/SHUT) DURING THE TEST ANNOTATED.

NOTE: IF DRAWINGS OR ADDITIONAL INFORMATION IS REQUIRED TO SUPPLEMENT THIS REPORT, EACH DRAWING, ETC., WILL BE NUMBERED AND AUTHENTICATED WITH THE SIGNATURE BY THE CRAFTSMAN AND QAI MAKING UP THE REPORT.

NOTE: SHIPS, FLEET MAINTENANCE ACTIVITIES AND REGIONAL MAINTENANCE ACTIVITIES MANAGED BY FLEET FORCES COMMAND OR TYCOMS SHALL DISREGARD THE BLOCK 8 DIAMOND WHEN TESTING IS PERFORMED BY AN ACTIVITY OTHER THAN THE ACTIVITY PERFORMING REPAIR. THE ACTIVITY PERFORMING THE TESTING SHALL COMPLETE THE DIAGRAM REQUIRED BY BLOCK 8.

BLOCK 9 - GAGE DATA

Enter the primary and backup gage data.

BLOCK 10 - REQ'D TEST PRESSURE (PSIG) AND TEST DURATION

Enter the required test pressure and test duration. If listing the test pressure would classify the CWP enter "J", "H", Item 1 of Ref (a), etc. as appropriate from the applicable reference instead of classifying the document.

BLOCK 11 - ACTUAL TEST PRESSURE (PSIG) AND TEST DURATION

Enter the actual test pressure and the duration the test pressure was applied. Test duration will include the required test period and the time required to complete the inspection. If listing the test pressure would classify the CWP enter "J","H", Item 1 of Ref (a), etc. as appropriate from the applicable reference instead of classifying the document.

BLOCK 12 - TEST RESULTS

a. Check "SAT" block, if all inspections specified by Block 7 are complete and satisfactory.

b. Check "UNSAT" block, if test results are unsatisfactory. Identify the specific inspection and reason for failure in the remarks section.

NOTE: IF A SATISFACTORY TEST CANNOT BE ACHIEVED, A DFS FOR NON-NUCLEAR TESTS OR LAR FOR NUCLEAR TESTS MUST BE PROCESSED IN ACCORDANCE WITH PART 1 CHAPTER 8 OF THIS VOLUME OR THE TASK MUST BE REWORKED AND RETESTED.

BLOCK 13 - REMARKS

Remarks pertinent to this test will be entered in this block.

BLOCK 14 - CERTIFICATION

PERFORMED BY

Person performing the test print name, enter signature, badge number and date signifying accuracy of data recorded.

INSPECTED BY

QAI/Shipyard Representative print name, enter signature, badge number and date verifying the accuracy of test results recorded and inspection performed satisfactory.

DROP TEST RECORD

QA FORM 27 (9/05)

Planning shall fill in blocks identified by a ♦ prior to issuing

♦1. SHIP HULL NO.	♦2. JCN	♦3. LWC/SHOP	♦4. CWP/REC SER NO.	♦5. SYSTEM/COMPONENT

♦6. REFERENCES (TEST REFERENCE MANUAL(S) AND/OR OTHER APPLICABLE REFERENCES)		
A.	B.	C.

♦7. REQUIRED TEST AND INSPECTION – SPECIFY TEST REQUIREMENTS [i.e. TYPE OF TEST, SPECIAL VALVE POSITIONS, DURATION, ACCEPTANCE CRITERIA, JOINTS TO BE TESTED (IF ENTIRE COMPONENT/SYSTEM IS TESTED, SO STATE)].

♦8. DIAGRAM OF TEST AREA INCLUDING GAGS AND BLANKS INSTALLED, VALVE POSITIONS, INITIAL & FINAL TEMPERATURE (IF APPLICABLE) AND TEST GAGES/INSTR USED (DOCUMENT BELOW).

9. GAGE DATA	RANGE (PSIG)	SERIAL #	CAL DUE DATE
PRIMARY			
BACKUP			

10. a. REQUIRED TEST PRESSURE (PSIG): b. ACTUAL TEST PRESSURE:	a.	b.	11. a. FINAL PRESSURE AT END OF TEST: b. ACTUAL DURATION:	a.	b.
12. ALLOWABLE PRESSURE DROP% IN MINUTES/HOURS			13. FINAL PRESSURE DROP CORRECTED FOR TEMPERATURE CHANGE		

14. TEST RESULTS (CHECK ONE): ☐ SAT ☐ UNSAT

15. REMARKS:

16. CERTIFICATION	
PERFORMED BY:	INSPECTED BY:
CRAFTSMAN SIGNATURE DATE	QA INSPECTOR/SHIPYARD REP SIGNATURE/BADGE NO. DATE

(This Page Intentionally Left Blank)

QA FORM 27 INSTRUCTIONS

DROP TEST RECORD

PURPOSE: To document drop tests accomplished on piping systems or portions of a system to recertify the system after maintenance actions have been accomplished.

PROCEDURE: The numbered blocks on QA form 27 correspond with the instructions listed below. Any block not used will be marked NA. The planning organization shall fill in blocks identified with the diamond symbol, the Required Initial Test Pressure of Block 10 and the maximum allowable pressure drop in Block 12 prior to issuing the CWP.

BLOCK 1 - SHIP HULL NO.

Enter ship's name and hull number.

BLOCK 2 - JCN

Enter the JCN.

BLOCK 3 - LWC

Enter the shop number for the LWC.

BLOCK 4 - CWP/REC SER NO.

Enter the CWP/REC serial number or enter N/A if no CWP/REC is required. Do not list the CWP/REC revision.

BLOCK 5 - SYSTEM/COMPONENT

Enter the name of the system and/or component (i.e., FWD ESCAPE TRUNK) to be tested.

BLOCK 6 - REFERENCES

Enter the applicable test reference and/or other applicable references (e.g., drawing number and revision used to obtain the required test pressure and conducting of the test).

NOTE: ENTER "S9505-AF-MMA-010/PIPING SYSTEMS" WHICH PROVIDES REQUIREMENTS FOR SHIP'S FORCE TO SET-UP AND CONDUCT TESTING.

BLOCK 7 - REQUIRED TEST AND INSPECTION POINTS

Enter the specific test requirements, including inspection points, necessary to recertify the work. FMAs will fill in this block and then provide the QA form 27 to Ship's Force so they can prepare the test procedure to retest FMA work.

BLOCK 8 - DIAGRAM OF TEST AREA

Enter a diagram of the test area. Be specific. Include such things as relief valve locations, gage locations, blanks, gags, valve positions, initial and final temperature (if applicable), etc. The QAI will verify the diagram prior to performance of the test. For nuclear tests identify major components to be isolated or vented to preclude unnecessary pressurization.

NOTE: ALL VALVES WITHIN THE TEST BOUNDARIES MUST BE IDENTIFIED AND THEIR POSITION (OPEN/SHUT) DURING THE TEST ANNOTATED.

NOTE: IF DRAWINGS OR ADDITIONAL INFORMATION IS REQUIRED TO SUPPLEMENT THIS REPORT, EACH DRAWING, ETC., WILL BE NUMBERED AND AUTHENTICATED WITH THE SIGNATURE BY THE CRAFTSMAN AND QAI MAKING UP THE REPORT.

NOTE: SHIPS, FLEET MAINTENANCE ACTIVITIES AND REGIONAL MAINTENANCE ACTIVITIES MANAGED BY FLEET FORCES COMMAND OR TYCOMS SHALL DISREGARD THE BLOCK 8 DIAMOND WHEN TESTING IS PERFORMED BY AN ACTIVITY OTHER THAN THE ACTIVITY PERFORMING REPAIR. THE ACTIVITY PERFORMING THE TESTING SHALL COMPLETE THE DIAGRAM REQUIRED BY BLOCK 8.

BLOCK 9 - GAGE DATA

Enter the primary and backup gage data.

BLOCK 10a - REQUIRED TEST PRESSURE

Enter the required test pressure (psig).

BLOCK 10b - ACTUAL TEST PRESSURE

Enter the actual test pressure.

BLOCK 11a - FINAL PRESSURE AT END OF TEST

Record final pressure reading when the required test time is completed.

BLOCK 11b - ACTUAL DURATION

Enter the actual duration of the test.

BLOCK 12 - ALLOWABLE PRESSURE DROP % IN MINUTES/HOURS

Enter the allowable pressure drop as a percentage of the test pressure in minutes or hours. Cross out time measure not used.

BLOCK 13 - FINAL PRESSURE DROP CORRECTED FOR TEMPERATURE CHANGE

Record final pressure drop calculated with corrections for temperature change in the same units as Blocks 11 and 12.

BLOCK 14 - TEST RESULTS

Check "SAT" block, if all inspections specified by Block 7 are complete and satisfactory.

Check "UNSAT" block, if test results are unsatisfactory. Identify the specific inspection and reason for failure in the remarks section.

NOTE: IF A SATISFACTORY TEST CANNOT BE ACHIEVED, A DFS FOR NON-NUCLEAR TESTS OR LAR FOR NUCLEAR TESTS MUST BE PROCESSED IN ACCORDANCE WITH PART I CHAPTER 7 OF THIS VOLUME OR THE TASK MUST BE REWORKED AND RETESTED.

BLOCK 15 - REMARKS

Enter any comments pertinent to the test.

BLOCK 16 - CERTIFICATION

PERFORMED BY

Person performing the test print name, enter signature and date signifying accuracy of data recorded.

INSPECTED BY

QAI/Shipyard Representative print name, enter signature, badge number and date verifying the accuracy of test results recorded and inspection performed satisfactory.

(This Page Intentionally Left Blank)

SHOP TEST RECORD

QA FORM 28 (6/05) Planning shall fill in blocks identified by a ♦ prior to issuing

Page ____ of _____

♦1. SHIP	HULL NO.	♦2. JCN	♦3. LWC/SHOP	♦4. CWP/REC SER NO.	5. SYSTEM/COMPONENT/ROTATABLE POOL SER NO.

♦6. REFERENCES: TEST REF (E.G., MS, TECH MAN) & OTHER REFS (E.G., VLV DWG)	7. TEST GAGE RANGE /INSTRUMENT USED	SERIAL NO.	CAL DUE DATE	8. RELIEF VLV SET POINT
A.				
B.				
C.				
D.				

9. TEST REQUIREMENTS & RESULTS

TEST TYPE KEY	**H** = STRENGTH AND POROSITY/ELEVATED PRESSURE TEST	**J** = MECHANICAL JOINT TIGHTNESS	**ST** = SEAT TIGHTNESS	**OP** = OPERATIONAL	**O** = OTHER (SPECIFY): _____

♦ TEST TYPE (SEE KEY)	♦ PARAGRAPH DESCRIBING VALVE POSITION AND POINT OF ENTRY	♦ REF LTR	GAGE USED (LTR FROM BLK 7)	♦ REQUIRED MEDIUM	MEDIUM USED	♦ REQUIRED PRESSURE	ACTUAL PRESSURE	♦ MINIMUM DURATION	ACTUAL DURATION	♦ ALLOWED LEAKAGE	ACTUAL LEAKAGE	SAT/UNSAT	SIGNATURE, BADGE NO. & DATE

10. REMARKS. (CRAFTSMAN/QAI SUBMIT A DF TO RESOLVE UNSAT DATA)

11. QA INSPECTOR/SHOP SUPERVISOR SIGNATURE/BADGE NO. (RECORD REVIEWED FOR FINAL ACCEPTANCE)	DATE	12. QAS SIGNATURE/BADGE NO. (RECORD HAS BEEN REVIEWED FOR COMPLETENESS)	DATE

(This Page Intentionally Left Blank)

QA FORM 28 INSTRUCTIONS

SHOP TEST RECORD

PURPOSE: To document the OQE required when performing in-shop testing.

PROCEDURE: The numbered blocks on QA form 28, SHOP TEST RECORD, correspond with the instructions listed below. The form will become part of the TWD, and the responsibilities for filling out the form are as follows:

a. Planning shall fill in blocks identified by a ♦ prior to issuing QA form 28.

b. QAI will complete Block 11 (when required by this manual).

c. QAS shall complete Block 12 for SUBSAFE/SOC Testing.

d. Shop Supervisor shall complete Block 12 for other testing.

BLOCK 1 - SHIP/HULL

Enter the ship's name and hull number, or enter the appropriate rotatable pool system designator (e.g., TRIPER, CCRP, AERP, SSN 688CL, etc.).

BLOCK 2 - JCN/Job Order & Key-Op

Enter the Job Control Number (e.g., 20884-EM01-2947, 3872556103/R01). Naval Shipyards enter Job Order and KeyOp.

BLOCK 3 - LWC/SHOP

Enter the shop number of the Lead Work Center/or the Assigned Key Shop.

BLOCK 4 - CWP/REC SERIAL NO.

Enter the CWP/REC serial number if applicable, otherwise NA. Do not list the CWP/REC revision.

BLOCK 5 - SYSTEM/COMPONENT/ROTATABLE POOL SER NO.

Planner enter the noun name of the system and component, or the name of the component being tested (e.g., ASW-80/81). If the record is for testing rotatable pool material, Planner or Craftsman enter the serial number of the material when available or known.

BLOCK 6 - TEST REFERENCES

Enter the document number that provides the test requirements other than those test requirements listed in the Task Group Instruction, JCN or Job Order listed in Block 2: (e.g., SUBMEPP Maintenance Standard or Technical Repair Standard (SMS/TRS) Revision and Change, Task Group Instruction, Technical Manual and Section No., Assembly Drawing Number & Revision, etc.).

BLOCK 7 - TEST GAGE RANGE/TEST INSTRUMENT USED, SERIAL NO. & CALIBRATION DUE DATE

Enter each test gage and each instrument (normally enter the gage or instrument range) used for testing any item or component. Enter the serial number of the gage or instrument, and Calibration Due Date. If the items are part of a computerized test stand, indicate the serial number of the test stand.

BLOCK 8 - RELIEF VALVE SET POINT

Enter the relief valve set point and verification signature of person setting the relief. The signature(s) in Block 8 include that the test was accomplished with the proper calibrated test equipment. Use Block 10 for additional space. If listing the test pressure would classify the CWP enter "J", "H", Item 1 of Ref (a), etc. as appropriate from the applicable reference instead of classifying the document.

BLOCK 9 - TEST REQUIREMENTS & RESULTS

Planner enter all test requirements Test Procedure/Type of Test/Paragraph, required valve position and entry point (if not described by Test procedure, SUBMEPP Maintenance Standard or Technical Repair Standard, that is invoked in the Technical Work Document), Required Medium, Required Pressure, Minimum Duration, Allowable Leakage and any other test requirements. NA blocks if not applicable. Enter other test requirements, if applicable, in Block 9 or the Remarks Block 10. If listing the test pressure would classify the CWP enter "J", "H", Item 1 of Ref (a), etc. as appropriate from the applicable reference instead of classifying the document.

NOTES:

1. For Scope of Certification Tests requiring Divers Air Clean Requirements, Planning add a SOC Cleanliness Maintained Test Requirement (annotate to verify that system cleanliness has been maintained) with signature, badge number and date for the craftsman.

2. For hydraulic actuators with relief valves which must be removed for the hydrostatic or tightness tests, relief valve reinstallation shall be documented in one of the following manners:

    a. On a QA form 34A

    b. On a QA form 17C

    c. Planning: Enter "Relief valve removed for test and reinstalled after test" in the QA Form 28 Remarks block and provide an area for the mechanic to record the following attributes for all new material installed:

    - Piece number
    - Drawing number or reference letter
    - Part description
    - Quantity
    - LOE

    Mechanic: Record the data for each attribute listed above for all new material installed. Provide signature, badge number and date for Objective Quality Evidence that the relief valve and o-ring were reinstalled after the test; all new material meets specified requirements, is installed and listed below; and after verifying existing material is acceptable for re-use and is installed.

3. For hydraulic 2 position valve orientation, enter a requirement in the Remarks block for the operation of the valve ("PRESSURIZE C1 TO OPEN, PRESSURIZE C2 TO CLOSE"), signature, badge number and date for Objective Quality Evidence of the proper operation if not already identified in the Maintenance Standard Test requirements.

    Test or Production personnel enter the results of testing (Actual Medium Used, Actual Pressure, Actual Duration (including inspection time), Actual Leakage, and the results of testing (SAT or UNSAT) and enter signature, badge number and date. Signature also verifies that test instrumentation was calibrated, the correct test configuration was used to perform the test and any sequencing (e.g., valve cycling) listed in Block 9 or 10 was accomplished. If the

results are unsatisfactory, enter the deficiency report number or DL serial number which documents the test deficiency and/or work accomplished to correct the deficiency. If unsat, the craftsman will report the condition on a Deficiency Form or document the re-work on the applicable QA Form. Further testing of the component should not continue until the unsat condition is resolved. NA blocks if not applicable.

NOTES:

1. For Test Procedure steps that require testing from both directions, annotate/record Actual Pressure, Duration, Leakage, and Results for each direction.

2. For SOC work, valves that act as a boundary closure between two distinct operating pressure systems or subsystems shall have the test pressure of each port identified by a temporary tag when testing is performed in a shop or on a test bench, when the valve configuration is such that it could be installed two ways into the system, and the ports are not otherwise marked or identified. The temporary tags can be removed after the valves have been installed. The purpose of the tag is to alert personnel of the correct orientation of the valve into the system. (P9290 Appendix J, Paragraph J8 refers).

   Enter any remarks in Block 10. Remarks shall be accompanied by a signature, badge number and date, if not part of the original technical direction.

BLOCK 10 - REMARKS

Enter any remarks. Identify which test the remarks apply to. Remarks shall have a signature, badge number and date except where the entry is pre-printed on the form by Planning, unless the pre-printed entry requires signature for OQE. Initials may be entered in lieu of an employee's signature and badge number, if a corresponding employee's signature and badge number appears elsewhere on the same page.

BLOCK 11 - QA INSPECTOR/SHOP SUPERVISOR SIGNATURE/BADGE NO

Quality Assurance Inspector or Shipyard Representative enter signature, badge number and date verifying the completeness of the data recorded in Blocks 7 through 9 and that the data agrees with the listed requirements (as implemented by local Shipyard instruction).

BLOCK 12 - QAS SIGNATURE/BADGE NO.

For SUBSAFE or SOC components only, QAS or cognizant QA representative as defined by local instructions, will sign, enter badge number and date in this block to indicate the completeness of the entries.

For other components, the Production Shop Supervisor shall sign that the records have been reviewed for completeness.

(This Page Intentionally Left Blank)

JOINT/COMPONENT ASSEMBLY RECORD PAGE ____ OF _____

QA FORM 34 (6/05) Planning shall fill in blocks identified by a ♦ prior to issuing

♦1. SHIP	HULL NO.	♦2. JCN	♦3. LWC/SHOP	♦4. CWP/REC SER NO.	5. SYSTEM/COMPONENT/ROTATABLE POOL SER NO.

♦6. REFERENCES (Specify Assembly Number, if applicable. For Torque References, include paragraph number/step no., or Table no. as applicable.)

A.	B.	C.

7. NEW MATERIAL

PC NO.	REF.	JOINT BLK ID	DESCRIPTION (Include thickness for shims; diameter and thread pitch for fasteners)	QTY	LOE	IDENT (E.G., MIC NO./NSN/ROTATABLE POOL NO.) (**FOR LEVEL I FASTENERS:** Include Material Marking, Color Code, Heat/Lot Number, and Manufacturer's Symbol)	CRAFT INT

8. BLUE/CHALK CHECK AND OR VALVE BALL COMPRESSION DATA

♦REQ. STACK HEIGHT	ACTUAL HEIGHT	BALL COMPRESSION ☐ SAT ☐ UNSAT ♦☐ NA	BLUE/CHALK CHECK ☐ SAT ☐UNSAT ♦☐ N/A
♦REQ. BACK SEAT CAVITY	ACTUAL CAVITY	CRAFTSMAN SIGNATURE/BADGE/DATE	
		QAI SIGNATURE/BADGE/DATE	

9A. JOINT DATA FOR JOINTS REQUIRING TORQUE DOCUMENTATION

♦JOINT ID/JOINT TYPE	♦JOINT REF	♦REQ. THREAD LUBE	APPLIED THREAD LUBE	♦HI FSTNR ☐ YES ☐ NO	EXISTING HI MALE FASTENER MARKING	STUD ROTATION ☐ SAT ♦☐ N/A ☐UNSAT

♦FASTENER SIZE/TYPE	♦REQUIRED TORQUE AND TOLERANCE ☐ IN-LB ☐ FT-LB	♦TORQUE REF.	♦AVERAGE RUNNING TORQUE ☐ IN-LB ☐ FT-LB	FINAL TORQUE (INCLUDES RUNNING TORQUE IF APPL) ☐ IN-LB ☐ FT-LB	TORQUE DEVICE/INSTRUMENT USED RANGE SER. NO. CAL DUE DATE ☐ IN-LB ☐ FT-LB

JOINT DATA IS CORRECT AND JOINT MEETS REQUIREMENTS FOR SEALING SURFACE FINISH, ALIGNMENT, PARALLELISM AND GAP. ALL NEW MATERIAL ASSOCIATED WITH THIS JOINT MEETS SPECIFIED REQUIREMENTS, IS INSTALLED & LISTED IN BLOCK 7. EXISTING MATERIAL ASSOCIATED WITH THIS JOINT IS ACCEPTABLE AND CORRECTLY INSTALLED. EXISTING FASTENERS MEET SPECIFIED REQUIREMENTS.

CRAFTSMAN SIGNATURE/BADGE	DATE	QAI SIGNATURE/BADGE	DATE

♦10. LOCKWIRE/LOCKING CABLE/DEVICE INSTALLED OR REQD ACTION: ☐ NA	MATL. DESCRIPTION/NSN/PC NO.	JT. ID.	CRAFTSMAN SIGNATURE/BADGE ☐ **SAT**	DATE

11. REMARKS (CRAFTSMAN/QAI SUBMIT A DF TO RESOLVE UNSAT DATA)

(FOR USE WHEN SIGNATURE DOES NOT ALREADY APPEAR ON FORM)

INITIAL	SIGNATURE/BADGE NO.

12. LWC SUPERVISOR/SHOP SUPERVISOR SIGNATURE/BADGE NO. (RECORD REVIEWED FOR FINAL ACCEPTANCE)	13. QAS/QAO SIGNATURE/BADGE NO. (RECORD HAS BEEN REVIEWED FOR COMPLETENESS)

JOINT/COMPONENT ASSEMBLY RECORD PAGE ____ OF ____

QA FORM 34 CONTINUATION SHEET (6/05) Planning shall fill in blocks identified by a ♦ prior to issuing

♦1. SHIP	HULL NO.	♦2. JCN	♦4. CWP/REC SER NO./ROTATABLE POOL SER NO

♦6. REFERENCES (Specify Assembly Number, if applicable. For Torque Reference, include Para/Step no. Note no. or Table no., as applicable)

D.	E.	F.
G.	H.	I.

7. NEW MATERIAL

PC NO.	REF.	JOINT BLK ID	DESCRIPTION (Include thickness for shims; diameter and thread pitch for fasteners)	QTY	LOE	IDENT (E.G., MIC NO/NSN/ROTATABLE POOL NO) (**FOR LEVEL I FASTENERS:** Include Material Marking, Color Code, Heat/Lot Number, and Manufacturer's Symbol)	CRAFT INT

9.___ JOINT DATA FOR JOINT REQUIRING TORQUE DOCUMENTATION

♦JOINT ID/JOINT TYPE	♦JOINT REF	♦REQ. THREAD LUBE	APPLIED THREAD LUBE	♦HI FSTNR ☐ YES ☐ NO	EXISTING HI MALE FASTENER MARKING	STUD ROTATION ☐ SAT ♦☐ N/A ☐ UNSAT

♦FASTENER SIZE /TYPE	♦REQUIRED TORQUE AND TOLERANCE ☐ IN-LB ☐ FT-LB	♦TORQUE REF.	AVERAGE RUNNING TORQUE ☐ IN-LB ☐ FT-LB	FINAL TORQUE (INCLUDES RUNNING TORQUE IF APPL) ☐ IN-LB ☐ FT-LB	TORQUE DEVICE/INSTRUMENT USED RANGE SER. NO CAL DUE DATE ☐ IN-LB ☐ FT-LB

JOINT DATA IS CORRECT AND JOINT MEETS REQUIREMENTS FOR SEALING SURFACE FINISH, ALIGNMENT, PARALLELISM AND GAP. ALL NEW MATERIAL ASSOCIATED WITH THIS JOINT MEETS SPECIFIED REQUIREMENTS, IS INSTALLED & LISTED IN BLOCK 7. EXISTING MATERIAL ASSOCIATED WITH THIS JOINT IS ACCEPTABLE AND CORRECTLY INSTALLED. EXISTING FASTENERS MEET SPECIFIED REQUIREMENTS.

CRAFTSMAN SIGNATURE/BADGE	DATE	QAI SIGNATURE/BADGE	DATE

14. JOINT DATA FOR JOINTS NOT REQUIRING TORQUE DOCUMENTATION AND/OR OTHER SPECIFIC ATTRIBUTE DOCUMENTATION

FOR OTHER THAN JOINT MAKE-UP, DESCRIBE THE SPECIFIC ATTRIBUTE AND LOCATION OF THE ACCEPTANCE CRITERIA	CRAFTSMAN ONLY: JOINT SEALING SURFACES, ALIGNMENT, GAP & PARALLELISM IS SAT PER SPECIFIED REQUIREMENTS, AND STUDS HAVE BEEN CHECKED FOR ROTATION IF APPLICABLE; OR ATTRIBUTE IS ACCEPTABLE PER SPECIFIED CRITERIA. CRAFTSMAN & INSPECTOR: ALL NEW MATERIAL ASSOCIATED WITH THIS JOINT MEETS SPECIFIED REQUIREMENTS, IS INSTALLED & LISTED IN BLOCK 7. EXISTING MATERIAL ASSOCIATED WITH THIS JOINT IS ACCEPTABLE AND CORRECTLY INSTALLED.

♦ JOINT ID/JOINT TYPE OR ATTRIBUTE DESCRIPTION	♦ JOINT REF	♦ (C) FOR CRAFTSMAN OR (I) FOR INSPECTOR	CRAFTSMAN SIGNATURE/BADGE/DATE (FOR EACH JOINT/ATTRIBUTE) INSPECTOR SIGNATURE/BADGE/DATE (FOR EACH JOINT/ATTRIBUTE WHEN REQD)
A			
B			
C			
D			

QA FORM 34 INSTRUCTIONS

JOINT/COMPONENT TORQUE AND ASSEMBLY RECORD

REFERENCES:

(a) NAVSEA 389-0317 - Procedures for Maintenance and Repair of Naval Reactor Plants (Nuclear)
(b) NAVSEA SS800-AG-MAN-010/P-9290 - System Certification Procedures and Criteria Manual for Deep Submergence Systems

NOTE: PLANNING SHALL FILL IN BLOCKS IDENTIFIED BY A ♦ PRIOR TO ISSUING

PURPOSE: To provide a standard form to document the assembly and torquing of Nuclear Level I system piping joints, SUBSAFE, and SOC mechanical joints and assemblies listed in the requirements below. All other mechanical joints requiring assembly OQE, not listed below, may be documented on a QA form 34A.

REQUIREMENTS:

1. Torque documentation is required for the following joints and must be documented on a QA form 34.

a. All nuclear Level I system piping joints (i.e., flanges) governed by Chapter 14 of reference (a).

b. All joints assembled as a Controlled Assembly.

NOTE: ALTHOUGH JOINTS FOR CONTROLLED ASSEMBLIES AND NUCLEAR LEVEL I SYSTEM PIPING JOINTS ARE CERTIFIED ON THIS FORM, TORQUE VALUES MAY NOT APPLY TO ALL JOINTS.

c. SUBSAFE:

(1) Sea Connected/Seawater bolted pressure boundary joints NPS 1/2 inch and larger from the inboard joint of the backup valve (or equivalent) outboard (i.e., Hull Integrity (HI) joints).

(2) All sea connected/Seawater bolted pressure boundary piping and component joints from systems NPS 4 inches and larger inboard of the inboard joint of the backup valve.

(3) Electrical Hull Fitting Installation joints including EHF to pressure hull and EHF Shore Power joints.

NOTE: BOLTED PRESSURE BOUNDARY JOINTS ARE DEFINED AS JOINTS WHICH UTILIZE BOLTS, NUTS, STUDS, STUD-BOLTS, OR SCREWS TO JOIN TWO PRESSURE BOUNDARY PARTS.

d. Scope of Certification:

(1) All SOC bolted pressure boundary piping and component joints.

(2) In-line SOC union piping joints with torque values specified on drawing or document.

PLANNING THE SCOPE OF A QA 34 FORM: In order to support the execution process, it is necessary to properly limit the scope of Assembly Records. The following rules are provided to ensure proper breakdown:

a. Each shipboard piping joint shall have a unique joint record consisting of separate Block 9 entries.

b. All Level I material must be traceable to a specific joint. To ensure unique joint traceability, if any identical Level I parts are used in multiple joints within an assembly (normally this applies to fasteners), the craftsman will annotate which joint (Block 9A, 9B, etc.) the material was installed in.

c. For complex assemblies (e.g., Shaft Seal installations), assembly records should be scoped to support testing evolutions.

PROCEDURE: The numbered blocks on QA form 34 correspond with instructions listed below. Any block not used will be marked N/A. Planning shall fill in blocks identified by a ♦ prior to issuing the CWP. For QAI signatures, the planner will determine the need for a QAI prior to the start of the job. If no QAI is required, the planner will enter NA in the QAI signature block.

TOP OF FORM - PAGE _____ OF _____

Enter page numbers.

BLOCK 1 - SHIP/HULL NO.

Planner enter the ship's name and hull number, or enter the appropriate rotatable pool system designator (e.g., TRIPER, CCRP, AERP, SSN 688CL, etc.).

BLOCK 2 - JCN

Planner enter the Job Control Number (JCN).

BLOCK 3 - LWC/SHOP

Planner enter the lead shop assigned to assemble the joint (e.g., X31, X58, X56).

BLOCK 4 - CWP/REC SER. NO.

Planner enter the CWP/REC serial number or enter NA if no CWP/REC is required. Do not list the CWP/REC revision.

BLOCK 5 - SYSTEM/COMPONENT/ROTATABLE POOL SER NO.

Planner enter the noun name of the system and component (if applicable), (e.g., MSW-25). For Rubber Insert Sound Isolation Coupling (RISIC) enter the Selected Record Drawing (SRD) Line Item No. If Record is for in-shop restoration of rotatable pool material, enter the serial number of the material if known.

NOTE: ROTATABLE POOL SERIAL NUMBERS MAY BE ENTERED BY THE CRAFTSMAN IF NOT ENTERED BY THE PLANNER.

BLOCK 6 - REFERENCES

Planner enter all references used to identify component parts, joint, material and assembly information. Include revision letter and, when applicable, the assembly number (e.g., Assy D, Assy RA, etc.). Revisions for technical manuals are not required. If joint numbers are assigned via a sketch in a TWD or Planning sketch, include the TWD or Planning sketch number. Include both the assembly drawing and electrical holes assignment drawing for Electrical Hull Fittings. NAVSEA Technical Manual S9502-AM-GYD-010 may be abbreviated as "GYD-010" if needed.

BLOCK 7 - NEW MATERIAL

Craftsman

PC NO: Enter the piece numbers of parts. List only the new parts being installed. New body bound studs documented on a QA form 17SI should not be documented on a QA form 34.

REF: Enter the letter corresponding to the reference listed in Block 6 that provides the material specification or assembly information for the piece listed in the "PC NO." block.

JOINT BLK ID: Enter the alphanumeric designator corresponding with the particular Block 9 or Block 14 entry (9A, 9B, 14A, 14B, etc.) that identifies the joint where the material is installed.

DESCRIPTION: Describe all new parts associated with the assembly or joint. For fasteners and nuts, include diameter and thread (e.g., bolt, ½"-13; stud, ½"-12; SHCS, ½"-13, etc.). Record shim thickness when shims are installed (not required for shims installed as a part of an epoxy repair).

NOTE: IF A PORTION OF A NEW VALVE OR COMPONENT IS USED TO REPLACE PARTS (E.G., BONNET AND DISC ASSEMBLY), ENTER A DESCRIPTION OF THE PART OR ASSEMBLY OF PARTS AND DOCUMENT THE LEVEL I NUMBER OF THE NEW VALVE OR COMPONENT IN THE IDENT SECTION. LIST THE PARTS THAT THE ASSEMBLY CONSISTS OF IN THE REMARKS BLOCK (A SINGLE COMPONENT MAY BE LISTED IN BLOCK 7) WITH A NOTE THAT THE PART(S) WERE TAKEN FROM THE NEW VALVE OR COMPONENT.

QTY: Record quantity of new material installed. Each quantity must be unique to one Block 9 joint.

LOE: Identify the Level of Essentiality (MIC Level). The material control level shall be as identified by craftsman. Example: SS, LI, NA. For SOC material, enter the appropriate Material Control Division (A, B, or C).

IDENT: Enter the marking on the part or on the packaging/container/tag (when the part is not marked) as shown in Table 1.

CRAFT INT: Craftsman: Installing craftsman enter initials for material installed. The initials shall correspond to the related Block 9 craftsman's signature unless otherwise noted with a corresponding signature elsewhere on the form (e.g., Remarks block entry and signature).

NOTE: IF THE CRAFTSMAN INSTALLING THE MATERIAL IS OTHER THAN THE CRAFTSMAN SIGNING FOR JOINT DATA IN BLOCK 9 OR BLOCK 14, A CORRESPONDING SIGNATURE, PRINTED NAME AND DATE SHALL BE ENTERED IN THE REMARKS BLOCK.

BLOCK 8 - BLUE/CHALK CHECK AND/OR VALVE BALL COMPRESSION DATA

NOTE: A QA-34 FORM IS NOT REQUIRED TO BE GENERATED SOLELY FOR CAPTURING BLOCK 8 DATA IF THE REMAINDER OF THE COMPONENT IS TO BE ASSEMBLED USING A QA-34A FORM. USE A QA-17 OR OTHER APPROPRIATE METHOD.

(PLANNING) A documented blue/chalk check or valve ball compression check is required for all controlled assemblies and is allowed by the DDGOS in lieu of a seat tightness test for welded in-line valves and components where a seat tightness test is not practical. Enter an X in the applicable NA box when Blue/Chalk Check or Valve Ball Compression is not applicable. When a Valve Ball Compression check is required, enter the required stack height and ball cavity dimensions. These dimensions should include maximum and minimum requirements.

(CRAFTSMAN) Record actual ball/seat stack heights and cavity dimensions when Planning has provided the required dimensions. If more than one blue check is required, enter additional checks in Remarks. For hull and back up valves where more than one ball/seat stack height dimension is required, enter in the following manner: (3.213/3.567) where the first dimension is for one ball/seat combination and the second dimension is for the other one. Identify each dimension to its associated valve. Sign, date and print name after satisfactory accomplishment of a Blue/Chalk Check or Valve Ball Compression check.

TABLE 1- DOCUMENTATION REQUIREMENTS	
Material Control Level	**Required Information**
Level I Material Other Than Fasteners	MIC Number and any other traceability number, including any local traceability number (e.g., PNSY MLN – examples Z142, AB12).
Level I Fasteners	NOTE: THE INFORMATION ENTERED FOR FASTENERS MAY NEED TO INCLUDE INFORMATION FROM BLOCKS 3 AND 8 FROM QA FORM 1. DO NOT ENTER THE PNSY TRACE NUMBER FROM BLOCK 3 OF THE QA FORM 1. Document the markings from the fastener to include either: (1) The color code and the heat/lot number, material type, and manufacturer's symbol (for nuts containing a self-locking insert, the color of the insert is the manufacturer's symbol). (2) The MIC number (when MIC number is on the fastener or on the individual tag for some fasteners).
Controlled Structural Material And SOC Control Division "A" Material	Traceability Number
SOC Control Division "B" Material	Markings providing identification to material type or specification
AERP And Other Rotatable Pool Material (688 Class, TRIPER, Etc.)	Enter the appropriate rotatable pool serial number (e.g. RP-148A, 4810-013-5812-A3-0113, TIN -292-11893, etc.)
Transferred And Cannibalized Material	Enter the Equipment Removal List No. or other material History/ Traceability number (ERL# XXXX, SSBN-600 EHF #24, etc.)
Other Material Within The LEVEL I/SUBSAFE Boundary And SOC Control Division "C" Material	1. Enter at least one of the following documentation attributes: a. Stock Number (from package/container) b. Part Number (from package/piece) c. Part Number and associated Manufacturing Work Procedure (for manufactured items) d. Local Traceability Number (from piece/tag) e. Drawing and Piece Number (from piece/tag) f. Generic, MIL-SPEC, or Material Specification Marking (from piece) g. NDT record numbers or test results for items verified by generic material testing. 2. For SOC components only: Enter the stock number of the "O-ring lubricant or any sealant used during assembly.

BLOCK 9 - JOINT DATA FOR JOINTS REQUIRING TORQUE DOCUMENTATION

Torque documentation is required for the following joints:

(1) Sea connected/seawater bolted pressure boundary joints where failure of the joint would result in flooding into or out of the system through a hole greater than or equal to 0.28 square inches (0.6 inches diameter), within piping systems ½ NPS and larger from the inboard joint of the backup valve (or equivalent) outboard (i.e., Hull Integrity (HI) joints).

(2) All sea connected/seawater bolted pressure boundary piping and component joints for systems 4 inch NPS and larger inboard of the inboard joint of the backup valve.

(3) All bolted pressure boundary piping and component joints in submarine/vehicle Scope of Certification (SOC) boundary per reference (b).

(4) All pressure boundary joints assembled using controlled assembly procedures when torque is required by Planning.

NOTE: WHEN MULTIPLE JOINTS ARE DOCUMENTED ON ONE QA 34 FORM, ENTER A SUCCESSIVE LETTER FOR EACH BLOCK 9_ USED (E.G., 9B, 9C, ETC.).

NOTE: THIS BLOCK MAY BE USED FOR SPECIFIC ATTRIBUTES THAT ARE NOT COVERED BY THE STANDARD ATTRIBUTES ON THE FORM.

JOINT ID/JOINT TYPE: Planner enter the joint identification number including joint type (e.g., ASW-5744 F). For joint types, use "F" for flanged bolted joints, "U" for union joints, and "S" for screw joints. When a joint identification number is not available, a joint description (e.g., Tailpiece-to-Body (F)) shall be used. Locally assigned joint numbers may be used when a joint description is not practicable and clarity is required. When additional attribute(s) applies to a component (e.g., hatches, etc.) that are not covered by the attributes already on the form, list the attribute and location (applicable reference) for the acceptance criteria (e.g., TWD, technical manual, etc.). For hatches, at a minimum list the "Seat Clearance Measurement".

JOINT REF: Planner enter the letter corresponding to the reference listed in Block 6 that identifies where the joint number or description information is found (e.g., Mapping Diagram, Drawing, Tech Manual, Work Procedure, etc.).

REQ THREAD LUBE: Planner enter the type(s) of thread lubricant(s) that are authorized (e.g., MOLYKOTE P37, Fel-Pro C5A, etc. or options (e.g., MOLYKOTE P37 or Fel-Pro C5A)). Enter "None" if no lubricant is required.

APPLIED THREAD LUBE: Craftsman enter the thread lubricant actually used during assembly. Enter "None" if no lubricant was used.

HI FSTNR: Planner indicate (Yes/No) whether the joint contains Hull Integrity Male Fasteners. When "NO" is checked, enter "NA" in the "EXISTING HI MALE FASTENER MARKING" block.

EXISTING HI MALE FASTENER MARKING: (Craftsman) When the "HI FSTNER" block is marked "Yes", record the quantity of reused/existing male fasteners and the symbols of recognizable significance, as required by Part I, Chapter 5, paragraph 5.8.3.b(2) of this volume (e.g., 6 ea. .K., 2 ea. unmarked).

NOTE: (CRAFTSMAN) IF HULL INTEGRITY MALE FASTENERS (DRIVEN STUDS) ARE UNMARKED, ILLEGIBLE, OR THE SYMBOLS ARE NOT RECOGNIZABLE PER CRITICAL INSPECTION REQUIREMENTS OF PART I, CHAPTER 5, PARAGRAPH 5.8.3.b(2) OF THIS VOLUME, AND THEY WERE NOT REMOVED FROM THE HULL INSERT OR COMPONENT BODY:

a. DOCUMENT THE QUANTITY
b. ENTER THE WORDS "STUDS NOT REMOVED" IN THE REMARKS BLOCK
c. REQUEST QAI PERFORM A GENERIC MATERIAL IDENTIFICATION TEST (E.G., ACID SPOT TEST).

NOTE: (QUALITY ASSURANCE INSPECTOR) PERFORM A GENERIC MATERIAL IDENTIFICATION TEST ON HULL INTEGRITY MALE FASTENERS (DRIVEN STUDS) THAT ARE UNMARKED, ILLEGIBLY MARKED, OR MARKED WITH SYMBOLS THAT ARE NOT RECOGNIZABLE PER CRITICAL INSPECTION REQUIREMENTS OF PART I, CHAPTER 5, PARAGRAPH 5.8.3.b(2) OF THIS VOLUME AND FOR WHICH THE CRAFTSMAN HAS ANNOTATED "STUDS NOT REMOVED". MARK STUDS THAT ARE IDENTIFIED AS HAVING THE CORRECT MATERIAL

(I.E., .K. OR KM). IF THE STUDS CANNOT BE MARKED DUE TO SIZE/CONFIGURATION, ETC., ENTER THE RESULTS OF THE GENERIC MATERIAL IDENTIFICATION TEST IN THE REMARKS BLOCK.

Planner enter "NA" if not an HI joint or if no existing pressure boundary male fasteners are to be reused.

STUD ROTATION: Planner enter an X in the NA box of the Stud Rotation block when not applicable (e.g., when joint does not contain studs).

Craftsman record SAT after verifying all set studs to be tight during nut installation and torquing in accordance with Part I, Chapter 5, paragraph 5.8.7 of this volume.

a. Anaerobic Stud Bonding Inspection - Newly Installed Studs. The following test procedures shall be performed to ensure proper bonding after curing has been completed:

(1) Mark the end of the studs using a felt tip marker, paint pen or other appropriate marking pen by making a line in the direction of the center of the bolt circle.

(2) All newly installed studs shall be tested using one of the following methods. Either method may be used unless otherwise specified. Both methods utilize the same lubricant as required for final assembly of the joint. Studs shall not be restrained from turning during the test by any method other than the locking compound in the set end of the stud.

(3) Torque Method. Apply the minimum breakaway torque on each newly installed stud per TABLE 2. Double nuts or a stud extractor (Colette) shall be used to apply the required torque. Acceptance criteria is per paragraph b.

(4) Self Locking Nut Method. Apply torque to each newly installed stud by installing and removing an unused self-locking nut per NASM 25027 or commercial spec IFI-100/107 with plastic elements. Install the nut to a point of stud thread protrusion that is at least 3 threads beyond the self-locking insert. Acceptance criteria is per paragraph b.

b. The assembly is considered acceptable if there is no turning of the stud during the Breakaway Torque or Self-Locking Nut check. The assembly may also be considered acceptable if a slight initial turning motion (up to 1/4 turn) of the stud is observed, and no further turning motion is observed during torquing or nut installation/removal. (A small turning of the set stud represents a breaking or powdering of the locking compound which actually increases resistance to further turning motion.) Report any failures to Engineering.

c. In some cases, work authorizing TWDs may specify that studs set with an anaerobic locking compound in submarine hull integrity applications be subjected to an ultraviolet light inspection. Engineering requests for this test will be based on accessibility and ability to view the stud hole. When ultraviolet light inspection is specified, properly installed anaerobic compounds should appear as a red dye and should fully encircle the stud. This is considered to be an extra line of defense above and beyond performance proof testing of paragraphs a.(1) through b. above. Under no circumstances should ultraviolet light inspection be used as a substitute for performance proof testing.

d. In-Service Anaerobic Stud Rotation. Rotation of in-service Class 3 studs with anaerobic locking compound on subsequent tightening to the required torque is permissible, as long as the following check is performed:

(1) If the stud does rotate up to 1/4 turn during in-service nut tightening, then back off the nut 1/4 turn before continuing to torque it.

(2) If the stud does not rotate while backing off the nut or when torquing the nut afterwards, the stud is acceptable as long as the stud does not violate the stand-off requirement for that application. In this case, the stud rotation represents further breaking or powdering of the locking compound which increases resistance to any further turning motion.

(3) If the stud rotates while backing off the nut, rotates when torquing the nut afterwards or violates the stand-off requirement for that application, the stud must be removed and replaced. In this case, the stud rotation represents locking compound failure.

NOTE: IF ANY STUD ROTATION CAUSES THE STUD STAND-OFF TO VIOLATE THE STAND-OFF REQUIREMENTS FOR THAT APPLICATION, THEN THE STUD MUST BE REMOVED. THE STUD MAY BE CLEANED AND REINSTALLED IF IN ACCEPTABLE CONDITION OR REPLACED BY A NEW STUD.

TABLE 2 - Resistance Test Breakaway Torque Values for Anaerobic Locking Compounds

STUD SIZE	MIN TORQUE (FT-LBS.)	STUD SIZE	MIN TORQUE (FT-LBS.)	STUD SIZE	MIN TORQUE (FT-LBS.)
1/4	2.5	5/8	25	1-3/8	100
5/16	5	3/4	33	1-1/2	115
3/8	6.7	7/8	50	1 ¾-5	150
7/16	8.3	1	67	1 ¾-8	160
1/2	12.5	1-1/8	75	2	180
9/16	17	1-1/4	83	2-1/4	215

FASTENER SIZE/TYPE: Planner enter the type, size and thread of the male fastener (e.g., 1-1/4"-7 Stud, 9/16"-18 SHCS, 3/4"-10 bolt, etc.).

REQUIRED TORQUE AND TOLERANCE: Planner enter the torque and tolerance required for the component or fastener. Mark the appropriate block (in-lbs or ft-lbs). When special tightening/assembly instructions apply in lieu of torque, enter tightening/assembly instructions and reference document/drawing; use Remarks if additional space is required.

TORQUE REF: Planner enter the letter of the reference listed in Block 6 that identifies where the torque value was obtained, including paragraph or table when applicable.

AVERAGE RUNNING TORQUE: Craftsman enter the average running torque as measured. Mark the appropriate block (in-lbs or ft-lbs).

(Planning/Craftsman) Enter "N/A" in the block when self-locking fasteners are not being used.

NOTE: RUNNING TORQUE DOES NOT NEED TO BE TAKEN INTO ACCOUNT FOR FASTENERS GREATER THAN 5/8 INCH DIAMETER UNLESS SPECIFIED IN THE TWD. THE INTENT IS TO ENSURE PROPER TORQUE IS APPLIED, TAKING RUNNING TORQUE INTO CONSIDERATION WHEN IT IS A SIGNIFICANT FACTOR WITH REGARD TO THE FINAL TORQUE. IF RUNNING TORQUE DOCUMENTATION IS NOT REQUIRED BY THE TWD FOR FASTENERS GREATER THAN 5/8", PLANNING SHOULD ANNOTATE THE BLOCK "NR" FOR NOT REQUIRED.

NOTE: CLICKER STYLE TORQUE WRENCHES AND HYTORC DEVICES ARE NOT TO BE USED TO MEASURE RUNNING TORQUE.

NOTE: THE AVERAGE RUNNING TORQUE MAY BE OBTAINED BY USING THE SAME DIAL TYPE TORQUE WRENCH THAT WILL BE USED FOR MEASURING THE FINAL TORQUE. A LOW RANGE DEVICE IS NOT REQUIRED AND RUNNING TORQUE DOES NOT HAVE TO FALL WITHIN THE 20% TO 90% SCALE REQUIREMENT. IF RUNNING TORQUE IS NOT MEASURABLE USING THIS DEVICE, ENTER "0" (ZERO) FOR THE AVERAGE RUNNING TORQUE.

NOTE: DOCUMENTATION OF THE TORQUE WRENCH USED FOR DETERMINING THE AVERAGE RUNNING TORQUE IS NOT REQUIRED. IF A DIFFERENT WRENCH IS USED TO TAKE THE RUNNING TORQUE BECAUSE THE FINAL TORQUE IS MEASURED WITH A CLICKER STYLE OR HYTORC DEVICE, THEN THE TORQUE WRENCH DATA MUST BE RECORDED.

FINAL TORQUE: Craftsman record the final torque observed on the torque device. The final torque observed shall be the average running torque, as required, plus the required torque. Mark the appropriate block (in.-lbs or ft-lbs). Request QAI to verify final torque by direct observation for all Controlled Assemblies and hull integrity pressure boundary joints which contain Hull Integrity fasteners (as required in Table 3). In the event that a multiplier or HYTORC machine is used, place an asterisk or other symbol in this block and refer to the remarks block. In the remarks block add a statement such as "Torque multiplier was used, actual torque reading was XXX PSI. This converts to a torque value of XXX Ft-lbs." When a combination of torquing methods (e.g., torque wrench, turn-of-the-nut method, etc.) is used for a single joint, record the final torque applied, and document the alternate torquing process. Record the quantity of fasteners that were tightened using the alternate method. When special tightening/ assembly instructions apply in lieu of torque, as identified in the required torque block, document the actual special tightening/assembly applied to the joint (tightened, wrench tight, cap installed, etc.).

TORQUE DEVICE/ INSTRUMENT USED: Craftsman enter the range, serial number and calibration due date of the torque device used during assembly for the final increment. For HYTORC machine, enter "HYTORC", the HYTORC's head data (i.e., serial number), serial number of the pressure gauge used to read actual pressure applied for final torque and the calibration due date of that pressure gauge. If other calibrated instruments (e.g., torque multiplier, torque meter) are used, also enter data for these instruments.

CRAFTSMAN SIGNATURE/BADGE: Craftsman sign and date after satisfactory assembly of the joint.

QAI SIGNATURE/BADGE: When required, QAI shall sign and date after the satisfactory completion of assembly in accordance with the requirements. Planner enter NA when QAI is not required.

Table 3 - QAI Inspection Requirements				
Location	**Software Installation**	**Material Installations**	**Torque**	**Sealing Surface & Fasteners**
Nuclear Level I piping system mechanical joints	Note 1	Yes - Existing and New L/I	Yes (when a torque is specified)	No
Controlled Assemblies	Yes	Yes - New L/I Only	Yes	Yes
SUBSAFE Hull Integrity Joints	Yes	Yes - New L/I Only	Yes	Yes
SUBSAFE Bolted Pressure Boundary Joints	No	Yes - New L/I Only	No	No
EHF Installations	Yes	Yes - New L/I Only	Yes	Yes
SOC Bolted Pressure Boundary Joints	No	Yes - New L/I Yes - MCD-A Yes - MCD-B Yes - MCD-C	Yes	Yes
SOC Unions	No	Yes - New L/I Yes - MCD-A Yes - MCD-B Yes - MCD-C	Yes (When source is specified)	Yes

NOTE 1: YES - IF A FLEXATALLIC GASKET IS USED AND THE MATING SURFACES ARE NOT IN CONTACT. THE QAI IS NOT REQUIRED TO WITNESS INSTALLATION OF THE GASKET BUT MUST INSPECT THE MATING SURFACE GAP AND PARALLELISM AFTER SOFTWARE INSTALLATION AND FINAL TORQUE.

NOTE 2: QAI IS REQUIRED FOR THE FOLLOWING:

a. HF JOINTS
b. EHF JOINTS
c. CONTROLLED ASSEMBLIES FOR ALL SUBMARINES
d. SCOPE OF CERTIFICATION JOINTS

FOR JOINTS: CRAFTSMAN/QAI signature(s) certifies that the joint meets the requirements for the following:

a. The applied lubricant is acceptable per the technical direction.

b. All existing Hull Integrity Male Fasteners have been examined for markings of significance or have been verified by a generic material identification test to insure they are of proper material. All markings have been recorded and if required, the results of any material identification testing are recorded in the Remarks block.

c. All set studs have been verified to be tight during assembly in accordance with Part I, Chapter 5, paragraph 5.8.7 of this volume.

d. The final required pre-load torque has been applied in accordance with specified requirements.

e. Sealing surfaces meet the acceptance criteria of the applicable Maintenance Standard.

f. Alignment, gap and parallelism meet the specified requirements for the joint.

g. Male fasteners type and size agree with entries in the "FASTENER SIZE/TYPE" block and the specified criteria.

h. Existing fasteners are reinstalled in the same joint and are not obviously incorrect based on markings, color, corrosion or other visual indication.

i. Thread protrusion is satisfactory. Thread protrusion is the number of threads protruding above the nut. Minimum thread protrusion is one thread on non-self-locking fasteners or flush for self-locking fasteners. Maximum thread protrusion is ten threads unless authorized by drawing or technical manual.

j. All new material associated with the joint meets specified requirements and is listed in Block 7. Existing material associated with the joint is acceptable and is correctly installed.

k. The Craftsman will perform a visual check of new Level I material at the time of installation to verify the material meets the requirements of the TWD used to install the new material.

FOR OTHER THAN JOINTS: CRAFTSMAN/QAI signature(s) indicates compliance with the attribute(s) listed and the corresponding listed acceptance criteria. All new material associated with the joint meets specified requirements and is listed in Block 7. Existing material associated with the joint is acceptable and is correctly installed.

If UNSAT, the craftsman/QAI will initiate action to resolve the UNSAT condition (e.g., submit a DF) and indicate the action taken in the Remarks block. Do not sign unless a satisfactory repair is completed or the UNSAT condition is accepted.

BLOCK 10 - LOCKWIRE/LOCKING CABLE/DEVICE INSTALLED OR REQD ACTION

(Only required for SUBSAFE/DSS SOC joints)

NOTE: THIS BLOCK APPLIES TO LOCKING DEVICES THAT ARE INSTALLED AFTER JOINT MAKE-UP OR FOR CASES WHEN AN ACTION MUST BE TAKEN AFTER JOINT MAKE-UP TO ENGAGE THE LOCKING DEVICE (E.G., FLIPPING OF A LOCKTAB, STAKING A FASTENER, ETC.) TO ALLOW JOINT MAKE-UP AND TESTING PRIOR TO INSTALLING OR ENGAGING THE LOCKING DEVICE. THIS DOES NOT INCLUDE SELF LOCKING NUTS, SELF LOCKING BOLTS/CAP SCREWS, LOCKWASHERS, ETC. THAT ARE PART OF THE JOINT MAKE-UP AND ARE LISTED IN BLOCK 7.

Planner enter an X in the NA box when not applicable. When an action is required to engage the locking device, enter a description of the required action.

Craftsman sign, date and check SAT when lockwire, locking cable or required locking device (e.g., locking ring for EHFs, barrel nut locking device, etc.) has been properly installed, or the required action has been accomplished. Enter description (e.g., lockwire, locking cable, locktab) and ident (e.g., stock number, MIL-SPEC, or piece number) of the lockwire/locking cable/locking device. Enter description and "Existing" for existing locking devices. If more than one locking device type (e.g., lockwire and locktab washers) exists on the assembly, record additional information in the Remarks block. When the installation of more than one of the same type of locking device is being documented in Block 10 (e.g., 2 setscrews), record the quantity in addition to the description (Block 11 may be used if additional space is needed). Recording the quantity is not required for lockwire/locking cable, nor when the locking device quantity is documented in Block 7.

BLOCK 11 - REMARKS

(Craftsman/QAI/QAS/Planning) Enter any pertinent remarks or additional information related to the repair/assembly of the component. Each entry shall contain signature, badge number and date except where the entry is pre-printed on the form by Planning.

BLOCK 12 - LWC SUPERVISOR/SHOP SUPERVISOR SIGNATURE/BADGE NO.

LWC Supervisor will enter signature, date and badge number for final review, signifying the accuracy of the completed form. If any entry is UNSAT, initiate action to resolve the unsat condition and indicate the action taken in the "Remarks" block. Do not sign unless a satisfactory repair is completed or the UNSAT condition is accepted.

BLOCK 13 - QAS/QAO SIGNATURE/BADGE NO.

QAS/QAO sign, date and enter badge number for final review, signifying entries are complete and that the data agrees with the listed requirements.

BLOCK 14 - JOINT DATA FOR JOINTS NOT REQUIRING TORQUE DOCUMENTATION

NOTE: THIS BLOCK MAY BE USED FOR SPECIFIC ATTRIBUTES THAT ARE NOT COVERED BY THE STANDARD ATTRIBUTES ON THE FORM.

JOINT ID/JOINT TYPE OR ATTRIBUTE DESCRIPTION: Planner enter the joint identification number including joint type (e.g., ASW-5744 F). For joint types, use "F" for flanged bolted joints, "U" for union joints, and "S" for screw joints. When a joint identification number is not available, a joint description (e.g., Bonnet-to-Body (S)) shall be used. Locally assigned joint numbers may be used when a joint description is not practicable and clarity is required. When additional attribute(s) applies to a component (e.g., hatches, etc.) that are not covered by the attributes already on the form, list the attribute and location (applicable reference) for the acceptance criteria (e.g., TWD, technical manual, etc.). For hatches, at a minimum list the "Seat Clearance Measurement".

JT. REF: Planner enter the corresponding reference listed in Block 6 that identifies where the joint number or description information is found (e.g., Mapping Diagram, Drawing, Tech Manual, Work Procedure, etc.).

(C) FOR CRAFTSMAN OR (I) FOR INSPECTOR: Planner enter "C" on one line for each joint or attribute. Enter "I" on the remaining line for each joint or attribute that requires an inspector signature; leave blank if inspector signature is not required.

CRAFTSMAN SIGNATURE/BADGE/DATE: Craftsman sign and enter badge number and date on the line associated with the "C" after satisfactory assembly of the joint. If UNSAT, the craftsman will initiate action to resolve the UNSAT condition and indicate the action taken in the Remarks block. Do not sign unless a satisfactory repair is completed or the UNSAT condition is accepted.

FOR JOINTS: This signature provides certification that the joint meets the requirements for the following:

a. All driven studs have been verified to be tight during assembly. Stud rotation during torquing (and break away) is limited to 1/4 turn, but no more turning during installation or removal of the nut for newly installed Class 3 studs installed with locking compound.

b. The joint has been tightened using an approved method. Recording of torque value is not required.

c. Sealing surfaces meet the acceptance criteria of the applicable Maintenance Standard.

d. Alignment, gap and parallelism meet the specified requirements for the joint.

e. All new material associated with the joint meets specified requirements and is listed in Block 7. Existing material associated with the joint is acceptable and is correctly installed.

f. The Craftsman will perform a visual check of new Level I material at the time of installation to verify the material meets the requirements of the TWD used to install the new material.

FOR OTHER THAN JOINTS: This signature indicates compliance with the attribute(s) listed and the corresponding listed acceptance criteria. All new material associated with the joint meets specified requirements and is listed in Block 7. Existing material associated with the joint is acceptable and is correctly installed.

INSPECTOR SIGNATURE/BADGE/DATE: (Inspector) When required, Inspector sign and enter badge number and date on the line associated with the "(I)" for verification that all new material associated with the joint meets specified requirements and is listed in Block 7. Existing material associated with the joint is acceptable and is correctly installed.

JOINT/COMPONENT ASSEMBLY RECORD Planning shall fill in blocks identified by a ♦ prior to issuing PAGE _____ OF _____

QA FORM 34A (6/05) (For Assemblies Not Requiring Torque Documentation)

♦1. SHIP	HULL NO.	♦2. JCN	♦3. LWC/SHOP	♦4. CWP/REC NO.	5. SYSTEM/COMPONENT/ROTATABLE POOL NO

♦6. REFERENCES (Specify Assembly Number if applicable.)

A.	B.	C.
D.	E.	F.

7. NEW MATERIAL

PC NO.	REF.	JOINT ID	DESCRIPTION (Include thickness for shims; diameter and thread pitch for fasteners)	QTY	LOE	IDENT (E.G., MIC NO/NSN/ROTATABLE POOL NO) (**FOR LEVEL I FASTENERS:** Include Material Marking, Color Code, Heat/Lot Number, and Manufacturer's Symbol)	CRAFT INT

8. JOINT DATA

FOR OTHER THAN JOINT MAKE-UP, DESCRIBE THE SPECIFIC ATTRIBUTE AND LOCATION OF THE ACCEPTANCE CRITERIA. IDENTIFY JOINTS THAT REQUIRE CONTROLLED ASSEMBLY PROCEDURES.	INSPECTOR (SHIPYARDS ONLY - FOR CONTROLLED ASSEMBLY JOINTS ONLY) & CRAFTSMAN SIGNATURE CERTIFIES: (1) JOINT SEALING SURFACES, ALIGNMENT, GAP AND PARALLELISM ARE SAT PER SPECIFIED REQUIREMENTS AND STUDS HAVE BEEN CHECKED FOR ROTATION IF APPLICABLE, OR ATTRIBUTE IS ACCEPTABLE PER SPECIFIED CRITERIA. (2) ALL NEW MATERIAL ASSOCIATED WITH THIS JOINT MEETS SPECIFIED REQUIREMENTS, IS INSTALLED & LISTED IN BLOCK 7; EXISTING MATERIAL ASSOCIATED WITH THIS JOINT IS ACCEPTABLE AND CORRECTLY INSTALLED. FOR FLEET ONLY: FOR NON-CONTROLLED ASSEMBLIES WHEN NO SPECIFIC ATTRIBUTE IS SPECIFIED, INSPECTOR SIGNATURE CERTIFIES ACCEPTANCE OF LEVEL I MATERIAL ONLY. NUCLEAR LEVEL 1, INSPECTOR SIGNATURE CERTIFIES WITNESSING FINAL TORQUE ON FASTENERS WHEN A TORQUE IS SPECIFIED AND/OR GASKET COMPRESSION AND FLANGE PARALLELISM (GAP MEASUREMENT IS ONLY REQUIRED IF MATING SURFACES DO NOT CONTACT).

♦JOINT ID & JOINT TYPE OR ATTRIBUTE DESCRIPTION	♦JT. REF	♦(C) FOR CRAFTSMAN OR (I) FOR INSPECTOR	CRAFTSMAN SIGNATURE/BADGE/DATE (FOR EACH JOINT/ATTRIBUTE) INSPECTOR SIGNATURE/BADGE/DATE (FOR EACH (I) JOINT/ATTRIBUTE)
A.			
B.			
C.			
D.			
E.			

♦9. LOCKING DEVICE INSTALLED OR REQD ACTION: ☐ NA	MATL. DESCRIPTION/NSN/PC. NO.	JT. ID.	CRAFTSMAN SIGNATURE/BADGE/DATE ☐ **SAT**

10. REMARKS (CRAFTSMAN/QAI SUBMIT A DF TO RESOLVE UNSAT DATA)

(FOR USE WHEN SIGNATURE DOES NOT ALREADY APPEAR ON FORM)

INITIAL	SIGNATURE/BADGE NO.

11. LWC SUPERVISOR/SHOP SUPERVISOR SIGNATURE/BADGE NO (RECORD REVIEWED FOR FINAL ACCEPTANCE)	12. QAS SIGNATURE /BADGE NO (RECORD HAS BEEN REVIEWED FOR COMPLETENESS)

(This Page Intentionally Left Blank)

QA FORM 34A INSTRUCTIONS

JOINT/COMPONENT ASSEMBLY RECORD

FOR ASSEMBLIES NOT REQUIRING TORQUE DOCUMENTATION

PURPOSE: To provide a standard form to document the assembly of joints that do not require torque documentation. Planning shall fill in blocks identified by a ♦ prior to issuing.

REQUIREMENTS:

NOTE: NUCLEAR LEVEL I SYSTEM PIPING JOINTS (I.E., FLANGES) REQUIRE TORQUE DOCUMENTATION AND MUST BE DOCUMENTED ON A QA FORM 34.

1. A QA form 34A is required for:

   a. All Level I (nuclear and non-nuclear) pressure boundary joints (e.g., "F", "S", and "U" type joints) unless specifically excluded by Part I, Chapter 2, paragraphs 2.2.4.a. and 2.2.4.b. of this volume.

   b. The following submarine applications:

      (1) (Pre-688 Class) Submarine SUBSAFE Bolted Pressure Boundary Joints including in-line pipe joints as well as component (bonnet to body) joints less than 4 inch NPS inboard of the inboard joint of the backup valve.

      (2) Other SUBSAFE joints:

         (a) Non-Seawater/Non-Sea Connected piping and component joints (e.g., EMBT Blow, Artic Blow, Emergency Flood Control, Stern Diving).

         (b) Non-bolted pressure boundary piping and component joints within the hull integrity boundary (e.g., Union ("U") Bonnet Joints on Hull and Backup Valves, Hull and backup valve stem retainers ("S"), Boiler type Manhole Covers ("BTMC") on Impulse Tanks).

         (c) Non-bolted pressure boundary piping and components (e.g., "U" and "S" joints) not within the hull integrity boundary.

         (d) Linkage or mechanical interlock joints.

         (e) SUBSAFE/Non-SUBSAFE interface piping joints (e.g., "F" and "U" joints).

PLANNING THE SCOPE OF A QA 34A FORM: In order to support the execution process, it is necessary to properly limit the scope of Assembly Records.

a. Each joint shall have a unique joint record consisting of separate Block 8 entries.

b. All Level I material (nuclear and non-nuclear) must be traceable to a specific joint. To ensure unique joint traceability, if any identical Level I parts are used in multiple joints within an assembly (normally this applies to fasteners), the craftsman will annotate which joint (Block 8A, 8B, etc.) the material was installed in.

c. For complex assemblies (e.g., Shaft Seal installations), assembly records should be scoped to support testing evolutions.

PROCEDURE: The numbered blocks on QA form 34A correspond with instructions listed below. Any block not used will be marked N/A. Planning shall fill in blocks identified by a ♦ prior to issuing the CWP. For QAI signatures, the planner will determine the need for a QAI prior to the start of the job. If no QAI is required, the planner will enter NA in the QAI signature block.

TOP OF FORM - PAGE ____ OF ____

Enter page numbers.

BLOCK 1 - SHIP HULL NO.

Planner - Enter the ship's name and hull number, or enter the appropriate rotatable pool system designator (e.g., TRIPER, CCRP, AERP, SSN 688CL, etc.).

BLOCK 2 - JCN

Planner - Enter the Job Control Number (JCN). Naval shipyards enter Job Order and KeyOp.

BLOCK 3 - LWC/SHOP

Planner - Enter the LWC lead shop assigned to assemble the joint (e.g., X31, X38, X56).

BLOCK 4 - CWP/REC SER. NO.

Planner - Enter the CWP/REC serial number or enter N/A if no CWP/REC is required. Do not list the CWP/REC revision.

BLOCK 5 - SYSTEM/COMPONENT/ROTATABLE POOL NO.

Planner - Enter the noun name of the system and component (if applicable), (e.g., MSW-25). For Rubber Insert Sound Isolation Coupling enter the Selected Record Drawing Line Item No.

NOTE: ROTATABLE POOL SERIAL NUMBERS MAY BE ENTERED BY THE PLANNER, IF KNOWN, OR THE SHOP AS SPECIFIED BY LOCAL INSTRUCTIONS.

BLOCK 6 - REFERENCES

Planner - Enter all references used to identify component parts, joint, material and assembly information. Both the assembly drawing and electrical holes assignment drawing shall be listed for Electrical Hull Fittings (EHF). Include revision letter and, if applicable, the assembly number (e.g., Assy D, Assy RA etc.).

BLOCK 7 - NEW MATERIAL

PC NO: Craftsman - Enter the piece number of parts. List only the new parts being installed.

REF: Craftsman - Record the reference letter of the drawing or document listed in Block 6 which provides the material specification or assembly information for the piece listed in the “PC NO.” block.

JOINT ID: Craftsman - Enter the alphanumeric designator corresponding with the particular Block 8 entry (8A, 8B, 8C, etc.) that identifies the joint where the material is installed.

DESCRIPTION: Craftsman - Describe all new parts associated with the assembly or joint. For fasteners and nuts, include diameter and thread (e.g., bolt, ½”-13; stud, ½”-12; SHCS, ½”-13; etc.). Record shim thickness when shims are installed unless the installation is already documented on another QA form.

NOTE: IF A PORTION OF A NEW VALVE OR COMPONENT IS USED TO REPLACE PARTS (E.G., BONNET AND DISC ASSEMBLY), ENTER A DESCRIPTION OF THE PART OR ASSEMBLY OF PARTS AND DOCUMENT THE LEVEL I NUMBER OF THE NEW VALVE OR COMPONENT IN THE IDENT SECTION. LIST THE PARTS THAT THE ASSEMBLY CONSISTS OF IN THE REMARKS BLOCK (A SINGLE COMPONENT MAY BE LISTED IN BLOCK 7) WITH A NOTE THAT THE PART(S) WERE TAKEN FROM THE NEW VALVE OR COMPONENT.

QTY: Craftsman - Record quantity of new material installed.

LOE: Craftsman - Identify the Level of Essentiality (MIC Level) as "I" or "NA". The material control level shall be as identified by Planning in the TWD.

IDENT: Craftsman - Enter the marking on the part or on the packaging/container/tag (when the part is not marked) as shown in Table 1.

CRAFT INT: Craftsman - Installing craftsman enter initials for material installed. The initials shall correspond to the related Block 8 craftsman's signature unless otherwise noted with a corresponding signature elsewhere on the form (e.g., Remarks block entry and signature).

NOTE: IF THE CRAFTSMAN INSTALLING THE MATERIAL IS OTHER THAN THE CRAFTSMAN SIGNING FOR JOINT DATA IN BLOCK 8, A CORRESPONDING SIGNATURE, BADGE NUMBER AND DATE SHALL BE ENTERED IN THE REMARKS BLOCK.

TABLE 1- DOCUMENTATION REQUIREMENTS

Material Control Level	Required Information
Level I Material Other Than Fasteners	MIC Number and any other traceability number, including any local traceability number (e.g., PNSY MLN – examples Z142, AB12).
Level I Fasteners	NOTE: THE INFORMATION ENTERED FOR FASTENERS MAY NEED TO INCLUDE INFORMATION FROM BLOCKS 3 AND 8 FROM QA FORM 1. DO NOT ENTER THE PNSY TRACE NUMBER FROM BLOCK 3 OF THE QA FORM 1. Document the markings from the fastener to include either: (1) The color code and the heat/lot number, material type, and manufacturer's symbol (for nuts containing a self-locking insert, the color of the insert is the manufacturer's symbol). (2) The MIC number (when MIC number is on the fastener or on the individual tag for some fasteners).
Controlled Structural Material	Traceability Number
AERP And Other Rotatable Pool Material (688 Class, TRIPER, Etc.)	Enter the appropriate rotatable pool serial number (e.g. RP-148A, 4810-013-5812-A3-0113, TIN -292-11893, etc.)
Transferred And Cannibalized Material	Enter the Equipment Removal List No. or other material History/ Traceability number (ERL# XXXX, SSBN-600 EHF #24, etc.)
Other Material Within The LEVEL I/SUBSAFE Boundary	1. Enter at least one of the following documentation attributes: a. Stock Number (from package/container) b. Part Number (from package/piece) c. Part Number and associated Manufacturing Work Procedure (for manufactured items) d. Local Traceability Number (from piece/tag) e. Drawing and Piece Number (from piece/tag) f. Generic, MIL-SPEC, or Material Specification Marking (from piece) g. NDT record numbers or test results for items verified by generic material testing.

BLOCK 8 - JOINT DATA

NOTES:

(1) THIS BLOCK MAY BE USED FOR SPECIFIC ATTRIBUTES THAT ARE NOT COVERED BY THE STANDARD ATTRIBUTES ON THE FORM.

(2) FOR OVERHAUL OF HYDRAULIC ACTUATORS AND HYDRAULIC CONTROL VALVE ASSEMBLIES, ONLY ONE ENTRY IS REQUIRED FOR THE ENTIRE ASSEMBLY IN LIEU OF LISTING INDIVIDUAL JOINTS AS LONG AS A CLEAR DEFINITION OF WORK BOUNDARIES HAS BEEN IDENTIFIED IN THE WORK PROCEDURE. FOR THESE CASES, LIST "ACTUATOR ASSEMBLY" OR "CONTROL VALVE ASSEMBLY" IN THIS BLOCK.

JOINT ID & JOINT TYPE OR ATTRIBUTE DESCRIPTION: Planner - Enter the joint identification number including joint type (e.g., ASW-5744 F). For joint types, use "F" for flanged bolted joints, "U" for union joints, and "S" for screw joints. When a joint identification number is not available, a joint description (e.g., Bonnet-to-Body (S)) shall be used. Locally assigned joint numbers may be used when a joint description is not practicable and clarity is required. When an additional attribute(s) applies to a component (e.g., hatches, etc.) that are not covered by the attributes already on the form, list the attribute and location (applicable reference) for the acceptance criteria, (e.g., TWD, technical manual, etc.). For hatches, at a minimum list the "Seat Clearance Measurement".

JT. REF: Planner - Enter the corresponding reference listed in Block 6 that identifies where the joint number or description information is found (e.g., Mapping Diagram, Drawing, Tech Manual, Work Procedure, etc.).

(C) FOR CRAFTSMAN OR (I) FOR INSPECTOR: Planner - Enter "C" on one line for each joint. Enter "I" on the remaining line for each joint requiring an inspector signature.

CRAFTSMAN SIGNATURE/BADGE/DATE: Craftsman sign and enter badge number and date on the line associated with the "C" after satisfactory assembly of the joint.

For joints, this signature provides certification that the joint meets the requirements for the following:

a. All set studs to be tight during nut installation and torquing in accordance with Part I, Chapter 5, paragraph 5.8.7 of this volume.

b. The joint has been tightened using an approved method. Recording of torque value is not required.

c. Sealing surfaces meet the acceptance criteria of the applicable Maintenance Standard or drawing.

d. Alignment, Gap and Parallelism meet the specified requirements for the joint.

e. All new material associated with the joint meets specified requirements and is listed in Block 7. Existing material associated with the joint is acceptable and is correctly installed.

For other than joints, the signature indicates compliance with the attribute(s) listed and the corresponding listed acceptance criteria. All new material associated with the joint meets specified requirements and is listed in Block 7. Existing fasteners are installed in the same joint and are not obviously incorrect based on markings, color, corrosion or other visual inspection.

INSPECTOR SIGNATURE/BADGE/DATE: (QAI) When required, Inspector sign, print and enter badge number and date on the line associated with the "(I)" for verification of the following:

a. Controlled assemblies: All controlled assemblies shall be documented on a QA Form 34.

b. Non-Controlled assemblies: Inspector signature is for new Level I material only and meets the specified requirements and is properly documented in Block 7.

c. Nuclear Level I Non-Controlled assemblies: Inspector signature is for new Level I material, gasket compression and parallelism. (Gap measurement is only required when mating surfaces are not in contact).

If UNSAT, the craftsman/QAI will initiate action to resolve the UNSAT condition (e.g., initiate a DFS) and indicate the action taken in the Remarks block. Do not sign unless a satisfactory repair is completed or the UNSAT condition is accepted.

BLOCK 9 - LOCKING DEVICE INSTALLED OR REQD ACTION

NOTE: THIS BLOCK APPLIES TO LOCKING DEVICES ON SUBSAFE COMPONENTS THAT ARE INSTALLED AFTER JOINT MAKE-UP OR FOR CASES WHEN AN ACTION MUST BE TAKEN AFTER JOINT MAKE-UP TO ENGAGE THE LOCKING DEVICE (E.G., FLIPPING OF A LOCKTAB, STAKING A FASTENER, ETC.) TO ALLOW JOINT MAKE-UP AND TESTING PRIOR TO INSTALLING OR ENGAGING THE LOCKING DEVICE. THIS DOES NOT INCLUDE SELF LOCKING NUTS, SELF LOCKING BOLTS/CAP SCREWS, LOCKWASHERS, ETC. THAT ARE PART OF THE JOINT MAKE-UP, AND ARE LISTED IN BLOCK 7.

Planner - Mark the NA box when not applicable. When an action is required to engage the locking device, enter a description of the required action.

(CRAFTSMAN) Enter the Block 8 joint identifier (e.g., 8A) in the JT ID block, check the "SAT" box and sign, enter badge number and date when lockwire or required locking device (e.g., locking ring for EHFs, barrel nut locking device, etc.) has been properly installed, or the required action has been accomplished. Enter description (e.g., lockwire, locktab) and identification (e.g., stock number, MIL-SPEC or piece number) of the lockwire/locking device. Enter description and "Existing" for existing locking devices. If more than one locking device type (e.g., lockwire and locktab washers) exists on the assembly, record additional information in the REMARKS block. When the installation of more than one of the same type of locking device is being documented in Block 9 (e.g., 2 setscrews), record the quantity in addition to the description (Block 10 may be used if additional space is needed). Recording the quantity is not required for lockwire/locking cable, nor when the locking device quantity is documented in Block 7.

BLOCK 10 - REMARKS

(CRAFTSMAN/QAI/QAS) Enter any pertinent remarks or additional information related to the repair/assembly of the component. Each entry shall contain signature and date except where the entry is pre-printed on the form by Planning.

BLOCK 11 - LWC SUPERVISOR/SHOP SUPERVISOR SIGNATURE/BADGE NO.

LWC/shop LWC Supervisor will enter signature, badge number and date for final review, signifying the accuracy of the completed form. If any entry is UNSAT, initiate action to resolve the unsat condition and indicate the action taken in the "Remarks" block. Do not sign unless a satisfactory repair is completed or the UNSAT condition is accepted.

BLOCK 12 - QAS SIGNATURE/BADGE NO.

QAS or QAO will print name, enter signature, badge number and date for final review, signifying the accuracy of the completed form. If any entry is UNSAT, the QAS will initiate action to resolve the unsat condition and indicate actions taken in the "Remarks" block. Do not sign unless a satisfactory repair is completed or the UNSAT condition is accepted.

(This Page Intentionally Left Blank)

THICKNESS MEASUREMENT RECORD
QA FORM 35

1. SHIP HULL NO.	2. JCN	3. LWC/SHOP	4. CWP/REC SER NO	5. SYSTEM/COMPONENT

6. REFERENCES

A	B	C

7. ITEM(S) TO BE INSPECTED

PC NO.	REF	TYPE MAT	MIL-SPEC	MATERIAL PP – PIPE C – CASTING PL – PLATE O- OTHER	INSPECTION PROCEDURE	ACCEPTANCE CRITERIA	DESIGN THICKNESS	MIN/MAX ACCEPT THICKNESS	ACTUAL THICKNESS	ACCEPT REJECT
										☐ ACCEPT ☐ REJECT
										☐ ACCEPT ☐ REJECT
										☐ ACCEPT ☐ REJECT
										☐ ACCEPT ☐ REJECT

8. ULTRASONIC EQUIPMENT

INSTR (MOD/SER#)	TYPE TRANSDUCER	SIZE	FREQ	CAL STANDARD	COUPLANT
CAL DUE DATE:	DELAY ☐ CONTACT ☐ DUAL ELEMENT ☐				

12. SURFACE FINISH IS ACCEPTABLE IN ACCORDANCE WITH DRAWING:
PC NO____ ☐ SAT ☐ UNSAT PC NO____ ☐ SAT ☐ UNSAT PC NO____ ☐ SAT ☐ UNSAT PC NO____ ☐SAT ☐UNSAT

10. INSPECTION AREA SKETCH/REMARKS

11. INSPECTOR DATE	11. INSPECTOR DATE	12. NDT SUPERVISOR DATE NO.

(This Page Intentionally Left Blank)

QA FORM 35 INSTRUCTIONS

THICKNESS MEASUREMENT RECORD

PURPOSE: To document UT thickness measurements and acceptability of material measured based on design material thickness.

PROCEDURE: The numbered blocks in QA form 35 correspond with the instructions below.

BLOCK 1 - SHIP HULL NO.

Enter the ship's name and hull number.

BLOCK 2 - JCN

Enter the JCN.

BLOCK 3 - LWC

Enter the LWC.

BLOCK 4 - CWP/REC SER. NO.

Enter the CWP/REC serial number or enter N/A if no CWP/REC is required. Do not list the CWP/REC revision.

BLOCK 5 - SYSTEM/COMPONENT

Enter nomenclature and NPS (if applicable) for component being measured and if known, the end use (e.g., Valve body for ASW-352).

BLOCK 6 - REFERENCES

Enter the drawing number(s) or other references that show the material and design specifications for the component being measured (e.g., 845-4385050), the NDT inspection procedure number, and the drawing number and revision, material specification, or Military Standard used for acceptance criteria.

BLOCK 7 - MATERIAL

PC NO: Enter piece number of the part or component to be checked.

REF: Record the reference letter of the drawing or document listed in Block 6 which provides the assembly information for the piece listed in the "PC NO." block.

TYPE MATERIAL: Enter the material type (e.g., CRES-304, 7030 CUNI, 9010 CUNI).

MIL-SPEC: Enter the material MIL-SPEC or equivalent (e.g., ASTM, ASME/SPEC).

MATERIAL: Enter the abbreviation for the material being checked. If other than pipe, casting, or plate, write it in the block (e.g., forged) in the blank provided.

INSPECTION PROCEDURE: Enter the reference letter indicating the NDT inspection procedure number.

ACCEPTANCE CRITERIA: Enter the reference letter indicating the drawing, material specification, or Military Standard used for acceptance.

DESIGN MATL THICKNESS: Enter the design material thickness specified on the drawing, specification or standard.

MIN/MAX ACCEPT THK: Enter the drawing minimum acceptable thickness and if applicable the maximum drawing acceptable thickness with a MAX subscript.

ACTUAL THK: Enter the actual thickness as measured.

ACCEPT/REJECT: Check the appropriate box to indicate the results of the inspection.

BLOCK 8 - ULTRASONIC EQUIPMENT

INSTR (MOD/ SER. NO): Enter the equipment model and serial number.

CAL DUE DATE: Enter the calibration due date of the equipment used during the measurement.

TYPE TRANSDUCER: Enter the type transducer used during the measurement. Check the appropriate block.

SIZE: Enter the transducer size used during the measurement.

FREQ: Enter the transducer frequency used during the measurement.

CAL STANDARD: Enter the serial no. of the calibration standard used.

COUPLANT: Enter the couplant used during the measurement.

BLOCK 9 - SURFACE FINISH ACCEPTABILITY

Enter the piece number being inspected and check the appropriate block (SAT/UNSAT) indicating the result of the surface finish inspection.

BLOCK 10 - INSPECTION AREA SKETCH/REMARKS

Enter a sketch of the area measured. In addition to the sketch, enter a list of any other references to determine acceptability of material thickness. Enter grid spacing if applicable. Enter a list of any other references to determine acceptability of material thickness. This block may also be used to record the results of multiple thickness readings on the same component. Enter remarks or comments pertinent to the inspection. Sign and date each entry.

BLOCK 11 - INSPECTOR/DATE

NDT Inspector(s) print name, enter signature and date signifying accuracy of the data recorded.

BLOCK 12 - NDT SUPERVISOR ID NO./DATE

NDT examiner/supervisor print name, enter signature, and date signifying the report as technically and administratively complete and accurate.

SHIP TO SHOP TAG MAT-1 (GENERAL USE)
(Tag color is blue)

MAT-1

SHIP TO SHOP TAG
(GENERAL USE)
TAG ____ OF ____

(PART 1)

SHIP JCN

EIC/APL SER. NO.

JOB BRIEF/EQUIP NOMENCLATURE

LEAD W/C | DATE DELV'D | DELIVERED BY

(PART 2)

READY FOR PICK UP TAG

SHIP* JCN*

JOB BRIEF-WORK PERFORMED

REPAIR ACTIVITY REP. DATE

(PART 3)

CUSTOMER MATERIAL RECEIPT

SHIP* JCN*

JOB BRIEF/EQUIP NOMENCLATURE*

RECEIVED BY DATE

DELIVERED BY DATE

SHIP'S FORCE REMOVE AND RETAIN PART 3 AS RECEIPT FOR MATERIAL DELIVERED TO THE REPAIR ACTIVITY

(This Page Intentionally Left Blank)

MAT-1 INSTRUCTIONS

SHIP TO SHOP TAG MAT-1 (GENERAL USE)

S/N 0103-LF-984-3400

NOTE 1: NOT TO BE USED FOR CONTROLLED MATERIAL.

NOTE 2: THE MAINTENANCE PROVIDER WILL ESTABLISH A PROCESS FOR CONTROLLING MATERIAL BEING TRANSPORTED FROM SHIP TO SHOP. IF A PROCESS IS USED OTHER THAN DESCRIBED BELOW, ISIC APPROVAL IS REQUIRED.

1. PURPOSE: To maintain positive identification and control of ship to shop transfer of equipment and components.

2. PROCEDURE:

a. Ship's Force personnel will fill out all blocks in Part 1 and those marked with an asterisk (*) in Parts 2 and 3, attach the tag to the equipment/component and deliver to the Repair Activity. Verify correct EIC/APL is provided. Ensure accurate description of desired work is included in Job Brief/Equip Nomenclature Block. Example: No. 2 Main Lube Oil Pump Discharge Relief Valve Pop Test to 45 psi and attach test tag.

b. When the component is delivered to the Repair Activity, ship's representative will sign and date Part 1 and 3 in the applicable blocks. The Repair Activity representative will sign and date Part 3 to acknowledge receipt of the equipment/component. Part 3 will be detached from the tag and given to the ship's representative.

c. Upon completion of repairs, the Repair Activity will record work performed, sign and date Part 2 and forward Part 2 to the ship as notice that the equipment/component is ready to be picked up.

d. The ship's representative will present Part 3 to the Repair Activity Shop when picking up the equipment/component. Ship's Force should sign the Work Request for job completion when the item is picked up. If desired, part 3 may be attached to the completed work request.

3. BLOCK DESCRIPTION:

a. Part 1.

Ship	Ship's name and hull number
JCN	Job Control Number (UIC, Work Center and JSN)
EIC/APL	Equipment Identification Code/Allowance Parts List of item worked
Ser. No.	Equipment/Component Serial Number
Job Brief/Equip Nomenclature	Job Description and name of equipment or component
Lead W/C	Work center responsible for equipment/component
Date Delv'd	Date delivered to Repair Activity
Delivered By	Signature of person delivering item

b. Part 2.

Ship	Ship's name and hull number
JCN	Job Control Number (UIC, Work Center and JSN)
Job Brief/Work Performed By Repair Activity	Job Description and brief explanation of work performed
Repair Activity Rep.	Signature of person verifying work complete
Date	Date of signature above

c. Part 3.

Ship	Ship's name and hull number
JCN	Job Control Number (UIC, Work Center and JSN)
Job Brief/Equip Nomenclature	Job Description and name of equipment or component
Received By	Signature of Repair Activity person accepting item for work
Date	Date of signature above
Delivered By	Signature of person delivering item to Repair Activity
Date	Date of signature above

VOLUME V

PART I

CHAPTER 12

SUBMARINE PRESERVATION

REFERENCES.

(a) NAVSEA SI 009-32 - Cleaning and Painting Requirements Accomplishment
(b) NAVSEA S9086-VD-STM-010 - NSTM Chapter 631 (Preservation of Ships In-Service - General)
(c) NAVSEA MS 6310-081-015 - Submarine Preservation
(d) NAVSEA ltr Ser 396A23/0641 of 25 June 93 - Trident Preservation Maintenance
(e) NAVSEA ltr Ser 92T124/006 of 14 Mar 02 - Preservation QA Requirements for In-Service Submarines

12.1 PURPOSE. The purpose of this chapter is to specify maintenance requirements for preservation systems on submarines to the submarine maintenance community.

12.1.1 Scope. This chapter provides the requirements for the Trident Repair Facilities to be used in all instances of maintaining, repairing, and replacing preservation systems on non-nuclear components and spaces of U.S. Navy submarines.

12.2 GENERAL PRESERVATION REQUIREMENTS.

a. Reference (a) is the primary preservation document and complies with requirements of reference (b), except where deviations are specifically approved by Naval Sea Systems Command (NAVSEA). In instances where the requirements specified in reference (a) conflict with requirements specified in other standards (including but not limited to Naval Ships' Technical Manuals, Deep Diving General Overhaul Specifications, Maintenance Requirement Cards, Maintenance Standards, and Individual Ship's Paint Schedules), the criteria of reference (a) must govern. Supplemental information and requirements for submarines can be found in reference (c).

b. To reduce overall maintenance and to help insure that the maximum coating life is obtained, Section 11 of reference (b) and reference (a), as applicable, are invoked by reference (d) for all Ohio Class preservation maintenance. In that section the term "shipyard" is to be interpreted to mean "Refit Facility".

c. Preservation maintenance must be performed as authorized by work statements in work packages or as specifically authorized by NAVSEA or the Type Commanders. In process inspections must be performed per reference (a).

12.3 SUBMARINE PRESERVATION MAINTENANCE PROCESSES.

12.3.1 Maintenance Processes. Reference (c) provides additional requirements for accomplishing cleaning, surface preparation, inspection, and paint application to maintain or replace submarine coatings. The individual maintenance processes are organized into separate attachments which can be used independently to perform the particular maintenance, and provide guidance to accomplish the minimum amount of work that has been historically required to support the safe operation of submarines.

12.3.2 Coating System Maintenance Authorization. Maintenance on a coating system is authorized by the work package or by the Current Ship's Maintenance Project, but it is the responsibility of the repair activity to evaluate the existing coating system to determine whether the authorized maintenance is adequate and proper to support reliable

operation of the ship. When a repair activity determines, by inspection, that the level of repair needed is greater than authorized, they must obtain approval of the Type Commander for authorization to accomplish the additional work. The existing coating must be evaluated by a qualified technical evaluator who has, at a minimum, successfully completed the National Association of Corrosion Engineers (NACE) Level I Basic Coating Inspector Training (or equivalent) per reference (a).

12.4 QUALITY ASSURANCE FOR CRITICAL COATED AREAS. The Quality Control requirements of Section 11 of reference (b), and reference (a), as applicable, and reference (e) shall form an integral part of a shipyard's overall Quality Control program. The maintenance activity Quality Assurance organization shall be responsible for ensuring all requirements of this section are met.

12.4.1 Critical Coated Areas. Critical coated areas are areas where premature failure of the coating system cannot be detected by routine observation due to inaccessibility (such as inside ship's tanks) and those areas where restoration of the failed system cannot be undertaken without laying up the ship (e.g., nuclear space, ship's underwater hull requiring dry docking, and ship's tanks requiring separation from associated systems for access, cleaning and represervation).

12.4.2 Requirements for Critical Coated Areas. Critical coated areas shall have:

a. Surface preparation accomplished by certified blasters.

b. Coatings applied by certified painters.

c. Test and inspection records maintained in accordance with Table 631-11-1 of reference (b) and reference (a), as applicable.

d. Key checkpoints signed off by certified coating inspectors. See additional Quality Assurance requirements for potable water tanks and other high purity water tanks in applicable sections of reference (b) and reference (a), as applicable.

e. Any out-of-specification condition found is to be mitigated in accordance with reference (c), paragraph 9.

12.4.3 Test and Inspection Records. The maintenance activity shall maintain auditable records of the tests and inspections listed in Table 631-11-1 of reference (b) and reference (a), as applicable, for critical coated areas. The records shall be designed to provide objective quality evidence that applicable surface preparation and painting procedures were followed and that acceptable conditions and quality attributes were achieved for each parameter defined in Table 631-11-1 of reference (b) and reference (a), as applicable. A separate set of records shall be maintained for each area painted. Records applicable to painting reported in docking reports shall be incorporated into the docking report. The records shall be available for three years after the delivery of the ship or completion of an overhaul or refit, unless otherwise specified. At the expiration of the records retention period, NAVSEA or its authorized representatives shall be given a written notification. If no disposition instructions are received within six months from the notification, the records may be destroyed.

12.4.4 Blaster and Painter Certification. The maintenance activity shall maintain a certification program for blasters and painters of critical coated areas. The program shall include minimum training requirements and provide for adequate records verifying the completion and currency of training for each blaster or painter involved in surface preparation or application of coatings in critical areas. Documentation shall be maintained verifying that only certified blasters and painters are used for preservation work in critical areas. Training shall include all blasting and paint application techniques and procedures appropriate to the surface preparation and coating materials being used. These techniques and procedures include mixing, conditioning and thinning of paints, proper selection, control and maintenance of blasting and application equipment, and blasting and application techniques.

12.4.5 Coating Inspector Certification. The maintenance activity Quality Assurance Departments shall maintain a certification program for paint inspectors of critical coated areas. The program shall include minimum training requirements and provide for adequate records verifying the completion and currency of training for each paint

inspector involved in inspecting surface preparation, or application of coatings in critical areas. Documentation shall be maintained verifying that only certified paint inspectors are used for inspecting preservation work in critical areas. Training shall include all techniques and procedures appropriate to inspecting the surface preparation and coating application being used. These techniques and procedures include determining the acceptability of surface preparation prior to commencement of paint application, determining the degree of compliance with blasting and painting procedures appropriate to the surface preparation and coating materials being used and determining the acceptability of finished products in accordance with established standardized acceptance criteria. At a minimum, coating inspectors shall be certified and maintain certification to the NACE Level I Basic Coating Inspector training or equivalent per reference (a). Activities using application procedures such as thermal spray, resulting in deposition of flame sprayed aluminum or flame sprayed zinc, and other high technology coatings, are required to have at least one coating inspector professionally certified to NACE Level I or equivalent per reference (a). The coating inspector must be knowledgeable of the process and requirements.

12.4.6 Coating Inspector Responsibilities. Coating inspectors are responsible for providing reasonable confidence that material receipt and storage, surface preparation, paint application and paint curing are done in accordance with the requirements of references (a) and (b) and paint manufacturer instructions. These responsibilities require the coating inspector to:

a. Inspect material storage and receipt inspection facilities.

b. Ensure all inspection equipment requiring calibration certification is certified under organization metrology calibration programs.

c. Perform in-process inspections of surface preparation and painting activities in critical coated areas.

d. Verify successful completion of key checkpoints in the application process.

e. Inspect and accept or reject final paint systems in critical coated areas.

12.4.6.1 Inspection of Storage and Receipt Inspection Facilities. Inspections of these areas shall be done periodically to ensure paints are being stored and receipt inspected in accordance with manufacturer's product data sheets (American Society for Testing and Materials F718) and the requirements of reference (b) and reference (a), as applicable. It is an organizational level responsibility to obtain American Society for Testing and Materials F718s and Material Safety Data Sheets for specified products. These documents shall reflect the properties and requirements of the specified product as of the date of Navy approval for use. Records of inspection results shall be maintained for NAVSEA audit, in a manner similar to the test and inspection records of paragraph 631-11.4 of reference (b) and reference (a), as applicable.

12.4.6.2 In-Process Inspections. Coating inspectors shall be given notice and shall perform an inspection of each critical coated area when the following key checkpoints are reached:

a. Surface cleaned and ready for abrasive blasting.

b. Surface abrasive blasted and ready for priming.

c. Between each successive coat of paint and between stripe coats.

d. Final coat of paint applied and area ready for final inspection.

The inspector is required to examine all data maintained by the paint foreman concerning environmental conditions, surface cleanliness, surface profile and paint thickness. Certain data shall always be verified, depending on the checkpoint in question, including surface cleanliness, surface profile, dry film thickness and workmanship. Environmental data, such as temperatures, relative humidity and dew point need only be verified if the inspector is doubtful of the recorded values. Deficiencies in personnel training, certification, record maintenance, equipment maintenance or any matter that is not in accordance with good painting practice shall be recorded. The coating

inspector shall verify successful completion of each checkpoint with a signature on an appropriate form, which shall then be maintained in accordance with the instructions of paragraph 631-11.4 of reference (b) and reference (a), as applicable.

12.4.7 Inspection of Final Coating System. Inspection of final coating systems shall be performed in accordance with section IV.1.e of Table 631-11-1 of reference (b) and reference (a), as applicable, by certified paint inspectors. The responsibility for proper application including all associated processes for the application of the coating systems resides with the maintenance activity. Coating imperfections found, which may cause premature coating failure, shall be corrected before the paint system is accepted using appropriate touch-up procedures. Slight imperfections in the coating system are allowable, as long as they will not result in premature failure of the coating in the immediate vicinity of the imperfection. Such slight imperfections should be left intact, as trying to correct them could result in damage to the surrounding coating system. Failure to meet minimum dry film thickness requirements shall result in application of an additional coat or coats of paint in deficient areas before the coating system is accepted.

12.4.8 Review of Records for Final Coating Evaluation. A certified paint inspector authorized to represent NAVSEA shall review the paint records of each critical area to ensure the maintenance activity has maintained adequate control of the painting process. Records shall include all the test and inspection data required by reference (b) and reference (a), as applicable. Failure to produce such records, or records which indicate that blasting and painting was done in accordance with governing specifications/instructions, may be grounds for rejection.

12.4.9 Acceptance/Rejection of Final Coating Systems. Certified coating inspectors independent of the group, shop or code accomplishing the preservation work are responsible for accepting or rejecting completed coating systems in critical coated areas. Acceptance or rejection of coatings shall be based on a review of the painting records for the area and an inspection of the area, in accordance with paragraphs 631-11.11 and 631-11.12 of reference (b) and reference (a), as applicable.

VOLUME V

PART I

CHAPTER 13

WIRE REMOVAL AND REPLACEMENT

LISTING OF APPENDICES.

A Wire Removal/Replacement Form MAT-2

13.1 PURPOSE. To establish requirements, procedures and administrative tools to control work involving wire removal and connection.

13.1.1 Discussion. The disconnecting and reconnecting of electrical leads must be formally controlled to preclude inadvertent equipment configuration changes. Improper wire connections during maintenance have caused incidents of equipment malfunction and damage, and may result in increased personnel hazard.

13.2 ACTION. All operations which involve the physical removal or connection of one or more wires from their termination point will be documented using Appendix A of this chapter. A separate form will be used for each separate component or system (e.g., maintenance on two instrumentation drawers should be documented on two separate forms).

a. For maintenance actions which will result in an intentional wiring configuration change (e.g., Ship Alteration installation) Appendix A of this chapter shall be documented such that the disconnecting of old wiring and the reconnecting of new wiring is verified to be per print.

b. Blueprints, drawings, and schematic diagrams will be reviewed prior to work. The expected configuration shall be entered on the Wire Removal/Replacement Form (Appendix A of this chapter) before any wires are disconnected or moved. This will identify any discrepancy between the reference drawing and the ship's wiring configuration. Temporary wire markings will be used for positive identification if necessary and all checks will include proper hardware stack-up (lugs, washers, fastener tightness, etc.).

c. A clear method of identifying wire connections must be used (e.g., a worker who was not involved in the disconnection will be able to reconnect the wires without the need for further information sources). If necessary, a simple sketch can be generated and kept with the wire removal form to facilitate this, but the sketch is not intended to replace use of the Appendix A form.

d. Jumpers. Use of jumpers internal to cabinets requires use of Appendix A of this chapter, and if more than one jumper is used, a marking system must be used to identify them and prevent confusion (i.e., marked as Jumper-1, Jumper-2 or use different colored wires). When installing jumpers, fill out the "Wires Reconnected" blocks of Appendix A of this chapter first, then the "Wires Disconnected" blocks after the jumpers are removed. These procedures are not intended to replace any of the requirements of Section 4.d of Appendix F of the Tagout Users Manual.

(This Page Intentionally Left Blank)

APPENDIX A

WIRE REMOVAL/REPLACEMENT FORM MAT-2

Page _____ of ____

Job Description _____ Date _____

Equipment/Component Affected _____

Wiring Diagrams Used _____

WIRES DISCONNECTED					WIRES RECONNECTED				
LEAD NUMBER	TERMINAL BOARD #	COLOR CODE	1ST CK	2ND CK	LEAD NUMBER	TERMINAL BOARD #	COLOR CODE	1ST CK	2ND CK

Disconn by _____ Date _____ Reconn by _____ Date _____

2nd Ck by _____ Date _____ 2nd Ck by _____ Date _____

Supervisor Review _____ Title _____ Date _____

(This Page Intentionally Left Blank)

VOLUME V

PART III

FOREWORD

SCOPE OF CERTIFICATION

LISTING OF APPENDICES.

A List of Acronyms
B Glossary of Terms

1 PURPOSE. Part III of this volume provides information to supplement Part I in the area of Scope of Certification. It provides processes and guidance to ensure, with a reasonable level of confidence, that work on Scope of Certification systems on Deep Submergence Systems (DSS) and Host Submarines and ships is accomplished with first time quality. It contains the necessary material and procedural requirements for DSS certification of manned noncombatant submersible, submarine oriented DSSs including diving systems, and the man rated portion of their handling systems.

2 SCOPE. This section is directive in nature and may be cited as authority for action. It is applicable to every ship and DSS in the fleet. Where higher authority imposes more stringent requirements, such requirements shall have precedence. When such conflicts are identified they should be reported immediately to the Type Commanders (TYCOM) or Immediate Superior In Command as appropriate. In the absence of any guidance, refer to the order of precedence listed in Part I, Foreword, paragraph 1.3.3 of this Volume.

3 NEED FOR SCOPE OF CERTIFICATION QUALITY MAINTENANCE PROCESSES.

a. The Deep Submergence Systems Program (DSSP) resulted from the Deep Submergence System Review Group (DSSRG) which was formed after the loss of the USS THRESHER (SSN 593) with all hands in April 1963. The Secretary of the Navy directed the DSSRG to examine the Navy's plans for the development and procurement of components and systems related to location, identification, rescue from and recovery of deeply submerged vessels from the ocean floor and to recommend a program that would result in optimizing the future effectiveness of such components and systems.

b. During the development of the DSSP, there were a number of mishaps that emphasized the importance of such a program. These incidents emphasize the need for properly designed systems, meeting design requirements and operating, maintaining and monitoring systems in accordance with approved procedures.

(1) In the early 1970s, two separate commercial incidents claimed three lives. The better known, the Johnson Sea Link entrapment, was where two lives were lost when a DSV became entangled on a scuttled destroyer.

(2) In 1982, five divers lost their lives when a vacuum was inadvertently drawn onboard USS GRAYBACK (SS 574). This led to redesign of diving systems to ensure a vacuum could not be drawn. It also led to ensuring Naval Sea Systems Command (NAVSEA) 00C is involved in the design of submarine oriented diving systems, in the approval of diving equipment, and in NAVSEA 07 SCA surveys of diving systems when NAVSEA 00C deems it necessary. Additionally, it led to requiring safety analysis during design for all systems within the Scope of Certification.

(3) In the 1980s, two Navy submersibles had casualties that did not result in any injuries but had the potential for serious implications. One DSS became entangled on the ocean floor when it began operating in an unauthorized area. In 1987, the other DSS lost buoyancy on sea trials after an overhaul as a result of a ballast tank valve being installed backwards. In 1987 a civilian submersible viewport failed due to improper design resulting in the death of one of the operators.

APPENDIX A

LIST OF ACRONYMS

ADS	Atmospheric Diving System
ASDS	Advanced SEAL Delivery System
CMH	Controlled Material Handler
CMPO	Controlled Material Petty Officer
COC	Certificate of Compliance
COMNAVSPECWARGRU	Commander, Naval Special Warfare Group
COT	Certificate of Test
CSP	Certification Survey Plan
CWP	Controlled Work Package
DDS	Dry Deck Shelter
DFS	Departure From Specification
DSS	Deep Submergence System
DSSP	Deep Submergence Systems Program
DSSRG	Deep Submergence Systems Review Group
DSU	Deep Submergence Unit
EHF	Electrical Hull Fitting
FADS	Fly Away Dive Systems
FFF	Form, Fit, Function
FMA	Fleet Maintenance Activity
HIP	Hull Integrity Procedure
ISIC	Immediate Superior In Command
JCN	Job Control Number
LWC	Lead Work Center
MCD	Material Control Division
MIC	Material Identification and Control
MOA	Memorandum of Agreement
MRC	Maintenance Requirement Card
NAVSEA	Naval Sea Systems Command
OQE	Objective Quality Evidence
PMS	Planned Maintenance System
PTC	Personnel Transfer Capsule
QA	Quality Assurance
QAI	Quality Assurance Inspector
QAO	Quality Assurance Officer
REC	Re-Entry Control

SCA	System Certification Authority
SDS	Salvage Dive Systems
SDV	Seal Delivery Vehicle
SOC	Scope of Certification
SRC	Submarine Rescue Chamber
SRCFS	Submarine Rescue Chamber Fly Away System
TYCOM	Type Commander
URO	Unrestricted Operation

APPENDIX B

GLOSSARY OF TERMS

TERM	DEFINITION
Advanced SEAL Delivery System	The Advanced SEAL Delivery System (ASDS) submersible is a one-atmosphere, dry, combatant submersible, capable of being transported on a submerged host for an extended period of time. The ASDS primary mission is to transport combat swimmers/SEALs into high threat areas and is capable of covertly locking-out divers.
Atmospheric Diving System	The Atmospheric Diving System (ADS) is a one-man, one-atmosphere, dry, submersible used primarily for submarine rescue. It is a surface supported submersible with a primary mission of clearing debris from the hatch of a disabled submarine and connecting the downhaul cable for the Submarine Rescue Chamber.
Certification	The process of certification application, review, survey and approval of all items and procedures within a Deep Submergence System (DSS) Scope of Certification (SOC) that affect the safety of DSS personnel. Written statement attesting that an item, procedure or system meets specified requirements.
Certification Package	The certification package consists of the Objective Quality Evidence supporting conformance to certification requirements.
Certification Survey Plan	A detailed checklist derived from the SOC which is used to identify the description of requirements and the supporting documentation to substantiate the requirements. It is used as the basis for certification surveys. Certification Survey Plans replace Pre-Survey Outline Booklets which were previously used for this purpose.
Cognizant Technical Authority	The organization which the NAVSEA Chief Engineer has designated as having the authority to represent the Chief Engineer on a specific technical area.
Critical Explodable Item	Any explodable item, which by exploding, affects the safety of the DSS personnel.
Critical Implodable Item	Any implodable item, which by imploding, affects the safety of the DSS personnel.
Deep Submergence Rescue Vehicle	A non-combatant submersible, consisting of three spheres with the internal pressure of each sphere normally at one atmosphere, but slightly elevated internal pressures may be experienced, which carries crewmembers of a disabled submarine to the surface.
Deep Submergence System Certification	The authorization granted by the System Certification Authority (SCA) to operate a DSS within its prescribed parameters.
Deep Submergence System Personnel	The occupants or operators of the DSS. The safety of personnel involved with the external handling and external equipment operations of the DSS is not covered by the certification process unless a danger to their well being imperils DSS personnel.

Deep Submergence System Unit	Those systems and components which, when working together, provide the capability for manned underwater operations. Elements may include a manned vehicle, shore training facilities, designated support equipment, those systems that are a temporary or permanent part of a submarine that are used to disembark or recover personnel such as a Dry Deck Shelter (DDS) or Lockout Trunk, and handling equipment.
Differential Loading	The presence of pressure on the interior or exterior surface of a component, piping system, sphere, implodable or other object which is more or less than the pressure located on the opposite surface.
Dry Deck Shelter	A unit consisting of three spheres which can be attached to a submarine or operated at designated shore base training facilities. The DDS has a specified external test depth and has specific internal pressure limits to which each sphere is operated. The DDS can deploy Special Operating Forces and their equipment, including SEAL Delivery Vehicles, while submerged.
Explodable Volume	Any pressure housing containing a volume of gas at a pressure above the external ambient sea pressure (at any depth) which has the potential to burst. Note that some volumes may be explodable at shallow depths and implodable at deeper depths.
Flotation	The materials, components or equipment that provide buoyancy to the DSS. Syntactic foam is a type of generally used flotation/buoyancy material.
Functional Audits	A functional audit is an audit of an activity performing SOC work. It is a review of policies, processes, controls, procedures and associated functions used to perform specific certification related tasks. The SCA will develop (define) an audit plan. This audit supplements the DSS construction, availability and sustaining surveys performed using the Certification Survey Plan.
Hull Envelope	The external hull and its penetrations including plates, inserts, frames, tanks, etc. It is the primary boundary between operators and the environment.
Hull Integrity Fasteners	Hull Integrity Fasteners (HF) are male threaded items such as bolts, studs and cap screws loaded by the differential between sea pressure and DSS internal atmospheric pressure and which are a part of pressure hull integrity component or of systems penetrating the pressure hull integrity boundary from the hull to and including the inboard valve. Does not include nuts and lockwashers.
Hull Integrity Procedures (HIPs)	A group of procedures (currently DDS and ASDS only) that must be performed as scheduled to sustain certification. These procedures perform periodic tests and inspections to: 1. Minimize the possibility of undetected degradation of hull integrity boundary materials due to their service environment. 2. Provide evidence that acceptable material conditions are being maintained to provide confidence that safe operations may be continued. 3. Provide specific guidance as to how the test or inspection shall be conducted, extent of inspection, procedure by which to measure the material conditions, criteria of acceptance and the required intervals between inspections for scheduling purposes.

Hull Openings	Openings in the pressure hull used for access, escape and logistics, which are designed to withstand the differential of sea pressure to internal hull pressure at collapse depth.
Hyperbaric Chamber	Pressure resistant structure, including reinforced openings, penetrations, hatches, piping, boundary valves and medical lock that experience differential pressures and provides space for personnel. Recompression chambers are examples of hyperbaric chambers.
Immediate Superior In Command	For Submarine Type Commander (TYCOM) DSS assets it is the Squadron or Group. For DDS and Advanced SEAL Delivery System units it is Commander, Naval Special Warfare Group (COMNAVSPECWARGRU) Three. When the DSS unit is attached to a host ship the Immediate Superior In Command shall be as identified in the Memorandum of Agreement.
Implodable Volume	Any pressure housing containing a non-compensated compressible volume at a pressure below the external sea pressure (at any depth down to the maximum operating depth) which has the potential to collapse. The outer shell volume is used when calculating the volume of an implodable. Subtracting the volume of items internal to the implodable is not allowed. Externally mounted lights, gauges, bottles/flasks, spheres/tanks and beacons are examples of implodable items.
Initial Certification	A certification process conducted on all DSSs procured for Navy use following demonstration of material and procedural adequacy.
Letter of Certification	A letter, message or other formal correspondence issued by the SCA, stating the terms and conditions of certification.
Life Support System	A structure (sphere, chamber or habitat at one atmosphere or greater internal pressure) which provides a livable environment for personnel or a piping system which provides and/or monitors a metabolic breathing mixture suitable and safe for use by divers and/or operators of DDS, Submarine Rescue Chambers or Recompression Chambers.
Manned Testing	The act of enclosing personnel inside a DSS asset and isolating them from the outside or host submarine atmosphere/environment, regardless of the time period involved during testing or training in accordance with a certification plan for initial certification or reinstatement of certification of the DSS as approved by the SCA per NAVSEA SS800-AG-MAN-010/P-9290, section 2.9.
Manned Use	The act of enclosing personnel inside a DSS asset and isolating them from the outside or host submarine atmosphere/environment, regardless of the time period involved during normal operations. This can include testing and training in pursuit of certification or recertification of the DSS as described in NAVSEA SS800-AG-MAN-010/P-9290, section 3.7.4.
Non-critical Explodable Item	Any explodable item, which by exploding, does not affect the safety of DSS personnel.
Non-critical Implodable Item	Any implodable item, which by imploding, does not affect the safety of DSS personnel.

Objective Quality Evidence	Any documented statement of fact, either quantitative or qualitative, pertaining to the quality of a product or service based on observations, measurements or tests that can be verified. Evidence will be expressed in terms of specific quality requirements or characteristics. These characteristics are identified on drawings, in specifications and other documents that describe the item, process or procedure.
Planning Yard	The Naval Shipyard or other activity designated by NAVSEA to perform technical services in design matters, maintaining up to date files of working drawings and Selected Record Drawings.
Program Manager	The organization or activity that acts for the DSS Sponsor and provides overall program management direction.
Reinstatement of Certification	The SCA will reinstate certification when the cause of the suspension has been thoroughly investigated and satisfactorily corrected and the material and procedural adequacy of the DSS has been re-established.
Scope of Certification	Those systems, subsystems and components and the associated maintenance and operational procedures required to provide maximum reasonable assurance that DSS personnel are not imperiled during system operations.
Scope of Certification Notebook	A document containing simplified diagrams which outline those structures, systems, subsystems and equipment within the DSS SOC and may provide guidance to ensure compliance with the certification requirements.
Scope of Certification Planned Maintenance System	PMS which must be satisfactorily performed within periodicity to maintain system SOC certification.
Skirt	A formed shape which is permanently attached to a sphere. The skirt is designed to mate the sphere or DSS unit to another object and the interior of the skirt is designed to be equalized to the same interior pressure as the sphere, allowing the sphere to be opened. When mated, the skirt is subjected to the same differential loading as the sphere.
Surveys	Initial and sustaining surveys verify the adequacy of the DSS for manned use to the limits for which certification is being requested or was issued. This is accomplished by examining Objective Quality Evidence, reviewing processes and procedures and inspecting equipment to validate compliance with approved procedural, design, fabrication, test and maintenance requirements.
Suspension of Certification	A prohibition on manned operation of the DSS until the cause of the prohibition has been resolved.
Sustaining Activity	The recipient of the Letter of Certification. The Sustaining Activity maintains and operates the DSS in the as certified condition per the Letter of Certification required by the appropriate NAVSEA technical specification or manual.
Sustaining Certification	To sustain certification, the DSS must be operated and maintained in the as certified condition in accordance with the Letter of Certification.
System Certification Authority	The code within NAVSEA assigned the responsibility for the manned DSS process by Naval Operations. The SCA has final authority and responsibility for granting certification for DSSs covered by this manual. The SCA resides with the Deputy Commander for Submarines (NAVSEA 07). The working responsibility for certification is vested in NAVSEA 07Q.

Technical Assistance Review	An overall or specific area review of certification related documentation, processes or practices conducted at the request of the Program Manager to provide SCA guidance in support of the assigned DSS or facility certification.
Type Commander	For Submarines and Submarine TYCOM DSS assets it is Commander Submarine Force Atlantic and Commander Submarine Force Pacific. For Advanced Seal Delivery System and DDS units it is Commander, Naval Special Warfare Command. When the DSS unit is attached to the host ship the TYCOM shall be as identified in the Memorandum of Agreement.
User Activity	The activity that provides and exercises operational control for the DSS. In some instances the User Activity and the Sustaining Activity will be the same.
Work	a. Any action that actually or potentially changes (including disassembly for the purposes of inspection or repair) the approved configuration of any part, component or ship's system. b. Any action that removes or affects the ship's ability to operate ship's systems or components in accordance with ship's systems/operating manuals or reactor plant manuals. c. Any testing or inspections required to establish, maintain or reestablish certification. d. Any design, engineering, planning or configuration management functions that involve the final review and/or approval of technical information. Examples of work include the following: 1. Action which disassembles or removes any part, component or ship's system. 2. Action specified in a Technical Work Document. 3. Any action that removes or affects the ship's ability to operate ship's systems or components in accordance with ship's systems manuals, operating manuals or reactor plant manuals, excluding tagout in accordance with the Tagout Users Manual, including but not limited to: (a) Component or system tests. (b) Intrusive inspections (such as breaking the plane of electrical panels requiring electrical safety). (c) Valve line ups that alter the normal system line up not governed by operating procedures. (d) Removing valve hand wheels, disconnecting of reach rods.

(This Page Intentionally Left Blank)

VOLUME V

PART III

CHAPTER 1

ORGANIZATIONAL RESPONSIBILITIES

REFERENCES.

(a) NAVSEA SS800-AG-MAN-010/P-9290 - System Certification Procedures and Criteria Manual for Deep Submergence Systems

1.1 PURPOSE. To provide a list of responsibilities and duties of key personnel within the organizations that are involved in the Scope of Certification (SOC) Program. Responsibilities and/or duties listed in this section are SOC specific and are in addition to the responsibilities listed in Part I, Chapter 1 of this volume.

1.1.1 Scope of Certification Organization.

a. Type Commander (TYCOM).

b. Immediate Superior In Command (ISIC).

c. Sustaining Activity.

d. User Activity.

1.2 RESPONSIBILITIES.

1.2.1 Type Commander. The TYCOM for Deep Submergence Systems (DSS) is responsible for the following items:

a. Obtain System Certification Authority (SCA) approval for exception to Re-Entry Control (REC) requirements in SOC systems.

b. Administer a Departure from Specification (DFS) system to:

(1) Establish and maintain an auditable method of processing requests for approval of DFS.

(2) Review and evaluate DFS requests and obtain clarification of technical specifications from Naval Sea Systems Command (NAVSEA) where appropriate.

(3) Approve or disapprove Non-SOC DFS requests.

(4) Monitor all outstanding major DFS and ensure ISIC records agree with TYCOMs and pursue DFS clearance.

(5) Obtain Program Manager approval of all DFSs in DSS SOC systems, unless the Program Manager has delegated, in writing, authority to approve specific routinely recurring DSS SOC DFSs or authority to approve minor DSS SOC DFSs.

(6) Keep the Program Manager and SCA informed of all DFS requests.

(7) Liaison with the Program Manager on any outstanding DFS items requiring NAVSEA action. Provide a periodic status report to the Program Manager of those DFSs for which NAVSEA action is overdue.

c. Perform assessments of ISICs responsible for DSSs annually not to exceed 18 months.

d. At the discretion of the TYCOM perform random, unannounced User/Sustaining Activity Quality Assurance (QA) assessments and monitor visits.

e. Review and evaluate User/Sustaining Activity reports of corrective action taken on SCA Surveys to ensure compliance with this program.

NOTE: THE SCA, NOT THE TYCOM, ALSO APPROVES INITIAL DSS CERTIFICATION.

f. Review and evaluate ISIC reports of corrective action taken on QA assessments to ensure compliance with this program.

g. Perform an annual self evaluation of the QA program.

h. Evaluate and analyze proposed changes to this volume.

i. Recommend to the SCA suspension and reinstatement of DSS certification as appropriate.

j. Perform annual SOC awareness training for staff members that routinely review SOC Objective Quality Evidence (OQE), make determinations on SOC DFSs and perform other SOC work oversight functions.

1.2.2 Immediate Superior In Command. The ISIC for the DSS and host submarines and ships is responsible for the following:

a. Organize and implement a QA program to carry out the provisions of this volume.

b. Organize and implement a program to verify performance of required maintenance to sustain the material condition necessary to support Unrestricted Operations to authorized operating depth in accordance with the applicable class Hull Integrity Procedure Maintenance Requirement Card manual and Volume VI of this manual.

c. (Submarines only) Organize and implement a work request screening process such that those jobs requiring special controls are recognized and the supporting technical documentation is provided to the maintenance activity as required by this volume (not applicable to COMNAVSPECWARCOM).

d. Ensure DSS certification continuity report, when required by this volume, is received and reviewed before DSS manned use. In particular, the ISIC will ensure all Hull Integrity Procedure planned maintenance is up to date. Discrepancies noted must be resolved prior to underway.

e. In accordance with reference (a), paragraph 3.7.4, when performing manned operations (manned use) in pursuit of certification or reinstatement of certification, review and approve User/Sustaining Activity requests prior to conducting these operations, as applicable.

f. Review and sign the Memorandum of Agreement (MOA) required by Volume II, Part I, Chapters 3 and 4, of this manual and reference (a). This agreement will list the responsibilities and actions of each party before start of any availability (e.g., Tiger Team repairs, technical assist visits) that involves work within SOC boundaries to ensure responsibilities for recertification of work performed is not split between maintenance activities and that each activity is responsible to certify the work they performed.

g. Administer a DFS system to:

(1) Establish and maintain system of processing requests for DFSs.

(2) Review and evaluate DFS requests and obtain clarification of technical specifications from TYCOM/NAVSEA where appropriate.

(3) Approve or disapprove DFS requests as authorized by the applicable SOC Notebook.

(4) Obtain TYCOM/NAVSEA approval of DFS when required by the appropriate TYCOM/NAVSEA directive, technical specification or manual.

(5) (Submarines only) Ensure the deployed ISIC directing the supporting Fleet Maintenance Activity (FMA) will act as the cognizant ISIC for those actions required to approve, review and track DFSs for ships deployed.

(6) (Submarines only) The parent ISIC will provide a complete file of all outstanding DFSs to the deployed ISIC, prior to any ship deployment. The deployed ISIC will provide a complete file of all outstanding DFSs to the parent ISIC at the end of deployment.

(7) Specify procedures for:

(a) Submission of OPNAV form 4790/2K for DFSs that require a future maintenance action to clear the departed condition.

(b) Submission of OPNAV form 4790/CK for permanent repair DFSs which result in new Allowance Parts List and Coordinated Shipboard Allowance List support requirements.

(8) (Submarines only) Keep parent ISIC apprised on the status of DFSs for deployed units.

(9) Maintain files of outstanding DFSs.

(10) Aggressively pursue clearing of DFSs.

h. (Submarines only) Monitor the QA program and procedures of assigned FMA periodically and monitor corrective actions on discrepancies noted during the last TYCOM audit.

i. (Submarines only) Schedule and conduct a QA Program assessment in conjunction with the Inter-Deployment Training Cycle (or as determined by each TYCOM) of all assigned ships to ensure the repair actions undertaken by Ship's Force conform to the provisions of the QA Program as well as pertinent technical requirements.

j. (Submarines only) Review and endorse TYCOM audit report of assigned FMA(s).

k. Conduct periodic monitoring of Ship's Force work and QA program on all assigned DSS during maintenance periods.

(1) Perform at least one surveillance during each refit/upkeep/FMA availability.

(2) Conducting monitoring during industrial availabilities (e.g., Selected Restricted Availability, Drydocking Selected Restricted Availability, Extended Refit Period, Post Shakedown Availability, Phased Maintenance Availability, Docking Phased Maintenance Availability, Depot Modernization Period, Engineered Refueling Overhaul and Regular or Refueling Overhaul).

l. Properly maintain certification on assigned DSS.

m. Ensure the Sustaining Activities properly perform internal surveys in accordance with reference (a).

n. Ensure Sustaining Activities properly process requests for sustaining certification.

o. Perform QA assessments of the Sustaining Activities/User Activities associated with the DSS and host submarines and ships annually not to exceed 18 months. Forward results of the assessments to the TYCOM and Program Manager.

p. Route all appropriate DSS SOC DFSs to TYCOM and Program Manager for approval.

q. Conduct a vertical audit of assigned DSS unit's OQE for all work within the SOC accomplished by the User Activity and the Sustaining Activity prior to the first sea trials or manned operation at the end of each major availability and after completion of any major repairs, modifications or alterations completed during non-depot level availability periods. Not required if an SCA Survey is scheduled at the conclusion of the availability.

r. Perform annual SOC awareness training for staff members that routinely review SOC OQE, make determinations on SOC DFSs and perform other SOC work oversight functions.

s. Ensure fact-finding critiques are held to establish underlying causes and pursue corrective actions when major errors, mistakes or problems occur during the operation and maintenance of SOC systems that result in serious injury to personnel or damage to equipment. Notify the TYCOM immediately of issues which will be critiqued and send a copy of the report to the TYCOM electronically when available.

1.2.3 Sustaining Activity/User Activity. Sustaining and User Activities in some cases may be the same organization. The Sustaining Activity is responsible for ensuring that the requirements established in the Letter of Certification and reference (a) are met. The Sustaining Activity and User Activity will:

a. Follow REC procedures during re-entry of a certified component, system or a portion of a system.

b. Document all deviations from the certification requirements in a form suitable for survey.

c. Accomplish periodic maintenance actions as specified in the supporting requirements developed for each DSS and ensure that adequate OQE is available during surveys in a format conducive to review.

d. Ensure accountability of maintenance for each DSS and establish an auditable system of scheduling, performing and reporting accomplishment of Maintenance Requirement Cards.

e. Submit an official request to NAVSEA for continuation of certification for a specific time period and include written rational for the continuation together with a status of maintenance and system condition.

f. Sustaining Activities will conduct internal surveys in accordance with section 4.1.2 of reference (a) and:

(1) If the SCA sustaining certification survey periodicity is 15 months or greater, perform at least two internal surveys between the SCA surveys, not to exceed a 12 month periodicity.

(2) Prior to the SCA on-site survey, conduct an internal survey to evaluate compliance with certification requirements.

(3) For other than overhaul or new construction, complete the Sustaining Activity's internal survey and submit it to the Program Manager in accordance with the applicable SOC notebook or reference (a) section 4.1.2.

(4) Overhaul/New Construction. The activity's internal survey must be completed not more than 30 days prior to the SCA survey and the results of the internal survey must be submitted to NAVSEA at least 10 working days prior to the start of the SCA survey.

(5) Obtain NAVSEA approval of an updated Certification Survey Plan at least two weeks prior to the SCA survey for an SCA Certification Survey Only.

g. Report to NAVSEA resolution of all survey deficiencies.

h. Retain the completed maintenance and dive log, including, where required, pre-dive and post-dive check-off procedures for all evolutions from survey to survey. The procedures utilized must have prior Program Manager and SCA concurrence.

i. Obtain NAVSEA approval for alterations to items within the SOC. This includes the addition of any mission-related equipment outside the defined lines of the DSS as deemed necessary by the SCA.

j. Accomplish and report Maintenance Requirement Cards and Hull Integrity Procedures in accordance with assigned periodicities approved by the Program Manager and immediately resolve any unacceptable conditions found as a result of conducting the maintenance procedures or inspections.

k. Review and sign the MOA required by Volume II, Part I of this manual. This agreement, as a minimum, shall define the activity's functions and responsibilities for implementing and administrating REC procedures. Volume II, Part I of this manual contains specific requirements for MOAs. All applicable activities must sign the MOA prior to the start of work.

l. The User Activity must issue the DSS certification continuity report before manned operations (Not applicable when in pursuit of certification or reinstatement of certification per reference (a) paragraph 3.7.4.). For vehicles loaded on submarines the certification continuity report must be issued prior to the underway of the host ship.

m. Obtain formal approval for any temporary modifications prior to installation in a DSS from the Program Manager. Submit the request to the Program Manager and include the items listed in section 5.4.4 of reference (a) and any other items as required by the Program Manager.

n. Operate the DSS within the limits specified as part of the requirements for each sustaining certification.

o. The Sustaining Activity shall report any violation of the DSS operating limits to NAVSEA stating the cause or justification for the violation.

p. Keep the Program Manager and SCA advised of any failure or improper operation experienced by, or damages sustained to, any item or system within the SOC.

q. The responsibilities listed in Part I, Chapter 1 Section 1.5 of this volume apply to the User/Sustaining Activity. Each activity shall comply with the applicable responsibilities listed in this section. For instance, Advanced SEAL Delivery Systems and DSSs are responsible for the duties listed in the Ship Commanding Officer section.

r. When the sustaining Activity is different than the user activity, the Sustaining Activity will issue a written report to the User Activity, with a copy to parent ISIC, which addresses the status of SOC RECs, testing of SOC systems, Hull Integrity Procedure maintenance requirements completed and DFS items.

s. Ensure fact-finding critiques are held to establish underlying causes and pursue corrective actions when major errors, mistakes or problems occur during the operation and maintenance of SOC systems, or that result in serious injury to personnel or damage to equipment. Contact the ISIC immediately for issues which will result in a DSS/SOC fact-finding, and send a copy of the report to the ISIC electronically when available. Examples include, but are not limited to the following:

(1) Noncompliant work or technical direction resulting in nonacceptable material within the DSS/SOC boundary (e.g., incorrect material installed, failure to complete recertification actions, incorrect torque applied, improper conduct of testing, wrong weld procedure, lack of/incorrect Nondestructive Test, unqualified welder, failure to use specified measuring device, etc.).

(2) Inaccurate or missing information/data provided on deliverable DSS/SOC technical documents affecting the certification status (e.g., certification messages, Unrestricted Operations Maintenance Requirement Card data reports).

(3) Conduct of work within the SOC boundary without required authorization or re-entry control.

(4) Failure to accomplish mandatory SOC related PMS within the required periodicity.

(5) Performance of DSS manned operations with an open Category 1A, Category 1B (unless as allowed by the card) or expired Category 1C system certification survey card, or outside of the allowed sustaining certification periodicity.

(6) Operation of SOC systems contrary to/or without a NAVSEA approved procedure.

VOLUME V

PART III

CHAPTER 2

QUALITY MAINTENANCE PROCESSES

REFERENCES.

(a) NAVSEA 0924-LP-062-0010 - Submarine Safety (SUBSAFE) Requirements Manual
(b) NAVSEA SS800-AG-MAN-010/P-9290 - System Certification Procedures and Criteria Manual for Deep Submergence Systems

2.1 APPLICABILITY. Use all of the quality maintenance processes specified in Part I, Chapter 2 of this volume.

2.2 CONTROLLED WORK PACKAGE. A Controlled Work Package is required for those items listed in Part I, Chapter 2, Paragraph 2.2.4 of this volume and the following items:

a. Installation of Material Control Division A, B or C materials.

b. Work within Scope of Certification (SOC)/hull integrity boundary, identified in reference (a), (b) and/or the applicable Deep Submergence System (DSS) SOC Notebook, including pressure hull grinding, cutting and welding.

c. Painting in excess of 10% of any DSS compartment including the interior of the transition trunk on the host ship above the access hatch.

d. Installation and maintenance on implodable items within the SOC boundary and all explodable items that meet the requirements of reference (b) and/or the applicable DSS SOC Notebook.

(This Page Intentionally Left Blank)

VOLUME V

PART III

CHAPTER 3

PERSONNEL QUALIFICATION AND TRAINING

REFERENCE.

(a) NAVEDTRA 43523 - Personnel Qualification Standard for Quality Maintenance Program

3.1 APPLICABILITY. Use the training and qualification requirements specified in Part I, Chapter 3 of this volume as modified in the following paragraphs.

3.2 GENERAL. Personnel who screen, plan, perform, inspect and supervise maintenance as listed in Part I, Chapter 2, paragraph 2.2.1 and Part III, Chapter 2 of this volume shall be trained and qualified in accordance with this volume and reference (a).

3.3 DISCUSSION. For Deep Submergence Systems, modify the training specified in the qualification standard of reference (a) and the appendices of Part I, Chapter 3, of this volume to include Scope of Certification (SOC) knowledge and practical factors. Send the revised qualification cards to the applicable Type Commander via the Immediate Superior In Command. The Type Commander will standardize qualification requirements for all subordinate commands dealing with SOC issues.

3.4 QUALIFICATION REQUIREMENTS.

3.4.1 Qualifications. Most User Activities are too small and do not have billets for Quality Assurance Officers (QAO). However, the responsible Immediate Superior In Command will have a QAO qualified in accordance with Part 1, Chapter 3, paragraph 3.4.3 of this volume. The Sustaining Activity will have a QAO qualified in accordance with Part 1, Chapter 3, paragraph 3.4.4 of this volume.

3.4.2 Scope of Certification Quality Maintenance Qualifications. Use the qualification requirements for other qualifications as listed in Part I, Chapter 3 of this volume. Note that not all qualifications would apply.

3.5 TRAINING.

3.5.1 Scope of Certification Awareness Training (Submarines and Submarine Repair Facilities only). All crew members assigned to a submarine with a system or systems which are in the SOC boundary shall receive SOC awareness training during initial indoctrination and annually thereafter. All personnel assigned to a command responsible for performing maintenance on submarine system(s) within the SOC boundary shall receive SOC awareness training during initial indoctrination and annually thereafter. Immediate Superior In Command and Type Commander staff members that routinely review SOC Objective Quality Evidence, make determinations on SOC Departures from Specifications and perform other SOC work oversight will receive annual SOC awareness training to keep knowledge and proficiency levels high.

(This Page Intentionally Left Blank)

VOLUME V

PART III

CHAPTER 4

WELDER, BRAZER AND NON-DESTRUCTIVE TESTING QUALIFICATIONS

4.1 APPLICABILITY. Use all of the welder, brazer and non-destructive testing qualifications as specified in Part I, Chapter 4 of this volume.

(This Page Intentionally Left Blank)

VOLUME V

PART III

CHAPTER 5

IN-PROCESS CONTROL

REFERENCES.

(a) NAVSEA SS800-AG-MAN-010/P-9290 - System Certification Procedures and Criteria Manual for Deep Submergence Systems
(b) NAVSEAINST 4790.8 - Ship's Maintenance and Material Management (3M) Manual
(c) MIL-STD-1330 - Standard Practice for Precision Cleaning and Testing of Shipboard Oxygen, Helium, Helium-Oxygen, Nitrogen and Hydrogen Systems
(d) NAVSEA S9086-CM-STM-010 - NSTM Chapter 078 (Gaskets, Packing and Seals)
(e) NAVSEAINST 4720.23 - Deep Submergence Systems Temporary Modifications

LISTING OF APPENDICES.

A Message Format for Certification Continuity for DSS
B Letter Format for Certification Report to Tended DSS
C Message Format for DDS Transfer of Custody Certificate of Continuity for Off-loads
D Message Format for DDS Transfer of Custody Certificate of Continuity for On-loads
E Message Format for DDS Acceptance of Custody

5.1 PURPOSE. To provide the requirements or direct the user to the appropriate references to ensure that maintenance performed during the Deep Submergence System's (DSS) life cycle supports certification at all times. Sections 5.5 through 5.8 of this chapter provide explicit inspection and acceptance criteria. Sustaining Activities, User Activities and Maintenance Activities should review specific system requirements for additional or superseding requirements. All material used within any DSS shall be as authorized for the specific DSS as required by reference (a).

5.2 EXCEPTIONS TO RE-ENTRY CONTROL. Exceptions to Re-Entry Control (REC) shall be listed in the applicable DSS Scope of Certification (SOC) Notebook.

5.3 PLANNED MAINTENANCE. Completion of Planned Maintenance System (PMS) is mandatory for continued certification of DSS units. Each DSS unit's PMS program will be administered per reference (a), reference (b) and the applicable SOC Notebook. Inability to comply with SOC PMS periodicities may require submission of a major Departure From Specification (DFS). The Program Manager will determine SOC-REC implementation based on the maintenance task complexity, system boundary and material control requirements. It is critically important to realize that even though a particular maintenance procedure does not require a REC, any repair or replacement of SOC components necessary to correct a deficient condition identified during that maintenance may require a REC. There are two documentation categories for SOC PMS:

a. SOC - REC Required. Each SOC-REC PMS item requires the issuance of a REC Form and associated Controlled Work Package (CWP).

(1) Each SOC PMS Maintenance Requirement Card (MRC) card will utilize the following note or an equivalent note that has been approved by the System Certification Authority (SCA): "This maintenance involves equipment within the DSS SOC as defined by the SOC Notebook or applicable document. Performance of this maintenance requires that REC be utilized."

(2) This maintenance will be documented and audited using the REC as Objective Quality Evidence.

b. SOC - NO REC Required. PMS items exempted from re-entry controls:

(1) Each SOC PMS Maintenance Requirement Card (MRC) will utilize the following note or an equivalent note that has been approved by the SCA: "This maintenance involves equipment within the DSS SOC as defined by the SOC Notebook or applicable document. Performance of this maintenance does not require REC. However, if repair or replacement of any component is necessary, compliance with system certification requirements must be documented."

(2) The Sustaining Activity shall, depending on the frequency and complexity of the maintenance action, determine the methodology of documenting the accomplishment and completion of SOC PMS in a form suitable for audit. The maintenance requirements shall identify that documentation is required.

5.4 TEST, MEASUREMENT AND DIAGNOSTIC EQUIPMENT. Follow the requirements specified in Part I, Chapter 5, Section 5.2 of this volume regarding Test, Measuring and Diagnostic Equipment for in-process work.

5.5 TORQUE. Follow the requirements specified in system drawings and Part I, Chapter 5, Section 5.3 of this volume for torque applied to components.

5.6 THREADED FASTENERS. Follow the requirements in Part I, Chapter 5, Section 5.4 of this volume for inspection and installation of threaded fasteners. Lubricants, anti-seize, locking compounds must comply with the certification requirements for the system as specified in reference (a) and the system drawings.

5.7 FLANGED AND UNION JOINTS. Follow the requirements in Part I, Chapter 5, Section 5.5 of this volume for flanged joints and union joints. Lubricants, anti-seize, locking compounds must comply with the certification requirements for the system as specified in reference (a) and the system drawings.

5.8 O-RING SEALS. Follow the requirements in Part I, Chapter 5, Section 5.6 for O-Ring seals. Lubricants, anti-seize, locking compounds must comply with the certification requirements for the system as specified in reference (a) and the system drawings.

5.9 INSPECTIONS.

5.9.1 General Requirements. This section provides the minimum requirements and guidance for the performance of inspections. Inspections during the performance of maintenance form one of the fundamental elements essential in assuring that the task is completed properly and in compliance with all specifications. Inspections occur during the in-process phase of repair/maintenance (disassembly, repair, and re-assembly) and the re-certification phase (testing). Inspections serve to provide a careful and critical examination of the areas being inspected and form one of the cornerstones of a successful Quality Assurance (QA) Program. Use of inspections have and will continue to establish the Objective Quality Evidence (OQE) necessary for ensuring compliance to technical requirements.

5.9.2 Inspection Records. Inspection records provide a lasting record that the inspection was performed and completed according to the applicable specifications. Inspection records will be maintained when required for OQE and will be documented on appropriate QA forms contained in this volume or as Certification Signature Blocks in the Formal Work Package (FWP).

5.9.3 Critical Inspections. An inspection on any system or component, which by its nature is so critical to the successful completion of the task, that the inspection requires verification by a separate individual, other than the craftsman, qualified as an inspector. These inspections will be annotated in the written work procedure by the presence of an (I) or circle I, or in the case of Cleanliness Inspections (CI) or circle CI in the margin next to the applicable paragraph requiring the inspection and will be documented as a signature in the FWP or on the appropriate QA form. Critical Inspections applicable to all DSS Systems or components are as follows:

NOTE: THESE ARE CONSIDERED MINIMUM REQUIREMENTS FOR USAGE OF AN INDEPENDENT INSPECTOR DURING THE PERFORMANCE OF SOC CONTROLLED WORK. IT MUST BE UNDERSTOOD THAT THE REQUIREMENTS FOR AN INDEPENDENT INSPECTOR DO NOT NECESSARILY MEAN THAT THE DATA PROVIDED IS RETAINABLE AS OQE. VARIOUS SOURCE DOCUMENTS ADDRESS RECORD RETENTION AND SHALL BE FOLLOWED FOR ENSURING THE PROPER OQE IS RETAINED.

a. Inspections performed for all acceptance testing (e.g., hydrostatic testing, drop tests, joint tightness tests, weight tests) for certification of work completed under a CWP.

b. Inspections performed to verify permanent traceability markings of SOC Material Control Division A material assigned and made locally at either a Fleet Maintenance Activity (FMA), a Sustaining Activity or at the User Activity. These inspections may also be performed by a Controlled Material Petty Officer.

c. Inspections performed to verify permanent markings of Level I/SOC material (those which the FMA manufacture or transfer to smaller pieces of controlled material). These inspections may also be performed by a Controlled Material Petty Officer.

d. Mechanical measurements used to verify wall thickness of components for work performed using a CWP.

e. Inspections performed for post machining of any SOC component.

f. All sealing surface inspections for work performed as a Controlled Assembly.

g. Inspections for oxygen or nitrogen systems cleanliness as required by reference (c). These independent inspections are performed by personnel qualified as Oxygen Clean Workers per reference (c).

h. Material receipt inspection. These inspections may also be performed by a Controlled Material Petty Officer.

i. Weight testing or Pull Testing of SOC components.

j. Performance of Emergent Controlled Work in accordance with Part I, Chapter 2 of this volume.

k. Sealing surface inspections for all SOC pressure boundary joints.

l. Hull Integrity joint body bound stud inspections. For new stud installations, this includes stud standout measurements and break away torque verification. For studs that were not removed and are to be reused, this includes verification of markings of significance (.K. or KM) or completion of generic material identification check.

m. Verification of body bound stud standout measurements and break away torque for new stud installations in SOC systems.

n. Final torque verification of SOC pressure boundary joints.

o. Verification of new controlled material installed into the SOC boundary.

p. Verification of proper software installation in SOC pressure boundary joints.

q. Stack height measurement verification for hull packing installation.

r. Seat tightness tests of SOC hull and backup valves. When seat tightness testing is impractical, verification of stack height and cavity dimensions or seat blue checks as applicable.

s. Surface finish inspection and final torque verification of SOC Host interface non-pressure boundary bolted joints (i.e., Advanced SEAL Delivery System, DDS pedestals, etc.).

5.9.4 Cleanliness Inspections. Cleanliness controls are required to prevent the entry of foreign material which could interfere with the operation of any system or component. Cleanliness controls are essential during maintenance with the degree of control depending upon the system and work to be accomplished. Hydraulic system cleanliness controls are necessary to minimize degradation of components and system leaks. Life Support system cleanliness controls are necessary to ensure the safety of personnel. Improper cleanliness controls can result in personnel injury or damage to operating machinery or fouling of system components. The time spent making sure the work site is clean and system openings are properly controlled will help prevent premature component failure and rework.

a. Cleanliness Inspectors are individuals who are trained and qualified to perform CI required by work procedures for systems/components requiring cleanliness controls. At the TRIDENT Refit Facilities, they are called Cleanliness Certifiers.

NOTE: ALL SYSTEMS REQUIRE VARYING DEGREES OF CLEANLINESS CONTROLS, BUT MAY NOT REQUIRE AN INDEPENDENT INSPECTOR. CRITICAL QUALITY CONTROL POINT INSPECTIONS BY SUPERVISORY PERSONNEL SHOULD BE USED WHERE APPROPRIATE.

b. Acceptance inspections of cleanliness by an independent inspector (Cleanliness Certifier/Inspector) are required for the following as a minimum: Oxygen or nitrogen systems per reference (c).

c. Results of cleanliness acceptance inspections required by paragraph 5.9.4.b of this chapter shall be documented in the Technical Work Document and certified by a signature. These inspections will be identified by a (CI) or circle CI in the left margin, if performed by an independent inspector.

d. There are no specific requirements for independent CI/acceptance by a Cleanliness Certifier/Inspector, during many SOC maintenance actions. However, many jobs may be performed using a craftsman to verify cleanliness vice requiring independent Cleanliness Inspector presence. When the risk or consequence of loss of cleanliness is minimal during a maintenance action, such as work requiring bonnet removal from a small hydraulic valve, maintenance of cleanliness may be verified by the craftsman. When the risk or consequences of loss of cleanliness is significant, such as when removing the bonnet from an oxygen or nitrogen valve or when the type or quantity of detrimental materials (e.g., cutting oils) pose a significant risk, the use of an independent inspector to verify maintenance of cleanliness should be considered by the Department Head, Quality Assurance Officer (QAO) and Planning Officer (if assigned).

e. It is the responsibility of User Activity to ensure the appropriate cleanliness control requirements are incorporated in any maintenance for which clear responsibility for cleanliness is not assigned.

5.10 SOFTWARE.

5.10.1 Determination of Acceptability and Use of Piping System Software. For SOC system maintenance, software should always be selected per the approved plans and drawings. However, to assist in the determination of acceptability of non-metallic packing materials (e.g., O-Rings, wall seals) for installation in SOC systems, decision aids have been developed from reference (d) and are provided in Part I, Chapter 5, Appendix A of this volume. Because software can contain critical attributes in SOC systems, a Liaison Action Request (LAR) to the Planning Yard may be appropriate to resolve conflicts in requirements.

a. It is Fleet policy that software (e.g., O-Rings, gaskets) will be reused only as a last resort. If new software is not available, software may be used after satisfactory inspection for damage, resiliency, discoloration or cracking in accordance with reference (d). This inspection will be documented in the CWP or FWP.

b. In all cases, the guidance provided in applicable Naval Sea Systems Command (NAVSEA) technical documents (e.g., drawings, component technical manuals) for SOC systems and components will be followed.

c. Reuse of software during daily PMS or other specified situations. The practice of not reusing software does not apply to items of daily PMS or items disturbed in the normal operation of a component per an approved operating procedure and, therefore, the O-Ring or gaskets may be reused provided the software has been inspected and is not damaged and new software is not required per the procedure.

5.11 SCOPE OF CERTIFICATION MAINTENANCE CERTIFICATION/RE-ENTRY CONTROL.

5.11.1 Purpose. To promulgate the policy and procedures for:

a. Maintaining continuity of SOC certification during the operating cycle.

b. General Maintenance Certification Record administrative requirements.

5.11.1.1 General.

a. Reference (a) establishes the SOC certification criteria which must be accomplished on DSS in order for NAVSEA to certify the DSS for operation. Once the certification criteria are satisfied, NAVSEA will issue a letter of certification to the Sustaining Activity. Based upon the NAVSEA letter of certification, the Sustaining Activity and the User Activity will operate the DSS within the SOC as authorized by NAVSEA in the SOC Notebook, Operating Instructions, Operating Procedures, Emergency Procedures, technical manuals or other directives governing operations.

b. Sustaining Certification for continued operation is dependent on:

(1) The positive control and re-certification of all re-entries into the SOC or hull integrity boundaries of the DSS, and

(2) The satisfactory and timely completion of Hull Integrity Procedure (HIP) requirements, and

(3) Completion of SOC PMS within periodicity and as written.

5.11.2 Re-Entry Control Program.

a. Applicability. This section is applicable whenever work is accomplished within a SOC boundary as defined by reference (a), and as depicted in the specific DSS SOC Notebook.

NOTE: THE SCA IS THE FINAL AUTHORITY FOR DETERMINING IF AN ITEM IS WITHIN THE SOC BOUNDARY. THE SOC NOTEBOOK IS AN ILLUSTRATED REFERENCE TO AID IN THE DETERMINATION OF WHETHER AN ITEM IS SOC OR NOT.

b. General. The REC Program includes those elements associated with maintenance and/or repair necessary to maintain the certification established by NAVSEA. The program provides auditable OQE of the following:

(1) What work was accomplished, including material and components used, re-test requirements, tests performed and test data.

(2) Why work was required.

(3) Who authorized and accepted the REC.

(4) Who did the work.

(5) When and where the work was accomplished, including the work and re-test boundaries.

c. When it becomes necessary to re-enter a SOC certified system or structure, it will be accomplished in accordance with the requirements and procedures of paragraph 5.11.3 of this chapter. Specific direction on completing the Maintenance Certification Record (MCR) (QA form 9) is contained in the instructions for QA form 9 in Part I, Chapter 11 of this volume.

d. Some exceptions to RECs are allowed due to frequent entry into the certified boundary for routine operations or maintenance actions. These exceptions and administrative and/or operational control requirements are contained in paragraph 5.11.6 of this chapter.

5.11.3 Re-Entry Control Administrative Procedures.

a. General. REC procedures provide a continuous, auditable record of work done on fully certified systems to provide positive assurance that they remain "certified". Continuity of Certification is mandatory throughout the operational life of the DSS to ensure continued safe operation within design limits for personnel safety.

b. REC. When re-entry of a SOC system or a portion of a SOC system (or component) is necessary, the work and re-certification of the work will be documented using the MCR/REC, QA form 9.

(1) An MCR/REC will be used for each re-entry of each certified system, certified component or portion thereof as defined by the SOC certification boundaries.

(2) An MCR/REC will be restricted to a single system within a single mapping plan, a single component removed from a system or a single component removed/worked that requires multiple mapping plans.

(3) When an MCR/REC is opened on a DSS to permit removal of a component by Sustaining/User Activity for repair by an FMA as a "ship to shop" job, an MCR/REC must be opened by the FMA to cover the work and retesting of the work center work performed.

NOTE: AN AUTHORIZED CONTRACTOR MAY BE PERFORMING WORK AS THE FMA OR DEPOT ACTIVITY. THE SPECIFIC MEMORANDUM OF AGREEMENT WILL FURTHER AMPLIFY THESE PROCEDURES AND THE INTERACTION WITH THE SUSTAINING/USER ACTIVITY.

(4) Where other certified systems must be re-entered to accomplish an MCR/REC, each system will have its own MCR/REC, except as described in paragraph 5.11.3.b.(2) above.

(5) The MCR/REC and records of MCR/REC will contain all of the OQE necessary to comply with paragraph 5.11.2.b. above.

(6) The work procedures associated with an MCR/REC will contain sufficiently detailed instructions to assure that all requirements for certification are properly accomplished and documented.

(7) Work and test boundaries will be defined in terms that are unique and directly identifiable with the specific mapping plan and/or task involved.

(8) When work and test boundaries are different, both boundaries will be set forth. The work boundaries, test boundaries and pressure boundaries should be specified and should not be confused. Work boundaries define the limits to which work was performed. Test boundaries define the limits for testing to certify the work; these tests may involve actuators, indicators or components other than those actually repaired. Pressure boundaries define (perhaps by valve lineups) the limits of the system which were pressurized to hydrostatically test the work. The pressure boundaries and test boundaries may be the same.

(9) On a "ship to shop" job the work boundaries may be best described by system joint designators even though those joints were not "disturbed" by the FMA (e.g., rebuild a Rubber Insert Sound Isolation Coupling, the work/test boundaries will be the end flanges that bolt up to the system, the joint identification numbers may be clearest identification of that boundary point).

(10) Previously certified hardware will be reused when certification is not affected by the re-entry, or when it can be recertified. The words "replace", "repair" and "re-install" should be used carefully. "Replace" means the use of a different/new component, while "re-install" indicates the use of the previously installed component, whether repaired or not. "Repair" indicates that some refurbishment, other than mere disassembly and/or cleaning, was performed.

(11) Associated supporting documents such as Nondestructive Testing (NDT) records, material certification, test data, etc., will be specifically identified and referenced on the MCR/REC.

(12) When it becomes necessary for an FMA to re-enter NON-Depot Level Repairable certified components (rotatable pool, bench spares) which will not be returned to the DSS from which it was removed, or when a component is re-entered when the DSS on which it will be installed is not present, the FMA will control the work and document the re-entry using a QA form 9, MCR/REC. The MCR/REC will be initiated and closed out by the FMA. A copy of the completed MCR/REC will accompany the component when it is installed in a SOC certified DSS or shipped to another activity as proof of certification. These controls are required whether the certified component is to be installed in certified SOC DSS or stored. Each component must retain its certification. These RECs are separate from and in addition to any MCR/REC required for removal of a component from a SOC system and are only necessary whenever the original component will not be returned during the current availability to the ship from which it was removed.

(13) The CWP/REC Log, QA form 11, will be established and maintained by the QAO in accordance with the detailed instructions for QA form 11 in Part I, Chapter 11 of this volume. The QA form 11 shall be reviewed by the QAO to verify all MCR/RECs are closed prior to manned and/or submerged operations of the DSS, except as discussed in reference (a), paragraph 3.7.4. The FMA QAO will maintain a log for the FMA only and one for each tended ship RECs. The QA form 11 shall be reviewed by the FMA QAO to verify all FMA MCR/RECs are closed prior to manned and/or underway operations of each tended ship/DSS, except as discussed in reference (a), paragraph 3.7.4.

(14) Revisions to the MCR/REC are required for the following:

(a) Change in work boundaries (e.g., breaking additional or new mechanical joints not previously identified on the MCR/REC). A REC revision is not required to delete undisturbed joints. Deletion of joints must be authorized by cognizant technical authority and documented in the REC package. Block 13 must be annotated to reflect joint deletions prior to signing REC Block 16.

(b) Change in NDT or test requirements (e.g., "J" vice H hydrostatic test, when "H" was originally specified). This does not include a DFS for unaccomplished testing. A REC revision is not required for NDT incidental to minor repairs as defined in paragraph 5.11.3.b.(14) (d) below. NDT results must be documented in the REC package.

(c) Scope of work changes (e.g., originally replace software changed to weld repair sealing surfaces, originally replace software changed to metallic pressure boundary part replacement).

(d) The REC does not require revision in order to conduct minor repairs in support of the original scope of work. These minor repairs must be authorized by cognizant authority and documented in the REC package, with appropriate OQE generated and added to Block 15 prior to the signing of Block 16 of the QA form 9. Hot work is not classified as a minor repair. Minor repairs authorized to be performed without a revision are:

1 Minor machining such that the machining is within the limits of the technical drawing, Maintenance Standard or technical manual (e.g., taking a skim cut on an O-Ring groove such that the final machined dimensions are within the tolerances of the technical reference).

2 Epoxy repairs.

3 Electroplate repairs.

4 Preventive coating application.

(15) A revision cannot be used when a new MCR/REC is required (e.g., different system must be entered to conduct repair).

(16) REC Cancellation and REC Administrative Closeout. In the event a CWP is prepared and the job is planned to be accomplished but for some reason it was cancelled or deferred, the following actions should be taken:

(a) If work was authorized to start, the CWP/REC must be revised to reflect that no work was accomplished and the REC was revised to close administratively. The QA form 11 log will be annotated that the job was "Cancelled".

(b) If work was not authorized to start, and the job has been cancelled, annotate the remaining blocks of the QA form 9 with "NA" and note that the REC was cancelled and no work was accomplished. Blocks 19 and 20 will be signed to formally close the REC. If the REC was prepared by a Repair Facility, a copy of the QA form 9 will be provided to the tended unit with the Certification Continuity Letter. QA form 11 log will be annotated that the job was "Cancelled".

(c) If work was not authorized to start and the job has been deferred to a future maintenance period, the REC is not required to be cancelled. The QA form 11 log will be annotated as "Deferred". This is not considered an open REC.

(17) Prior to manned operations (and each submarine underway for submerged operations) except as discussed in reference (a) paragraph 3.7.4, the USER ACTIVITY will submit to the Immediate Superior In Command (ISIC), a written report in accordance with paragraph 5.11.7 of this chapter. An SOC certification letter is only required.

(18) Ship's Force is responsible for providing "Buddy" SOC REC serial numbers to outside repair activities performing SOC work on the DSS systems. The Buddy REC number is issued from ship's QA form 11 log and will be documented on repair activities SOC/REC FORM.

5.11.4 Using a Departure from Specification to Close a Maintenance Certification Record/Re-Entry Control. If an MCR/REC is closed by transferring accountability for testing to an at-sea testing DFS, the DSS will be restricted as follows:

a. The unit shall dive to the maximum depth at which it is to be certified or recertified to operate. The affected joints shall be inspected for joint tightness during initial submergence and subsequently at 200 foot intervals. Operations are restricted to that depth at which satisfactory joint tightness has been certified. Inspections shall be conducted at 200 foot intervals down to the maximum depth at which it is to be certified or recertified to operate. The test dive may be a single dive or a series of dives to accomplish the same purpose. The DSS will stay at test depth for the time required as detailed in the normal retest procedure (i.e., 30 minutes if the normal joint tightness test is for 30 minutes) plus adequate time to permit inspections.

NOTE: THE DSS MAY BE MANNED OR UNMANNED WHILE THE UNIT IS PROGRESSING TO EACH DEPTH INCREMENT. IF THE UNIT IS UNMANNED, BILGE ALARMS OR OTHER MEANS OF DETECTING FAILURES MUST BE PROVIDED TO ALERT OPERATORS OF ANY DSS SYSTEM FAILURE. SUFFICIENT TIME MUST BE ALLOTTED AT EACH 200 FOOT DEPTH INCREMENT FOR A POTENTIAL LEAK TO REGISTER AN ALARM BEFORE PROCEEDING TO THE NEXT DEPTH. IF THE BILGE ALARM (OR OTHER MEANS) INDICATES A FAILURE, THE PROHIBITION AGAINST MANNED OPERATIONS AND DEPTH LIMITATIONS OF 5.11.4C. BELOW APPLY. FINAL INSPECTIONS OF AFFECTED JOINTS DURING UNMANNED TESTING WILL BE MADE AT 200 FEET OR SHALLOWER PROVIDING NO OTHER INDICATIONS OF POTENTIAL FAILURE WERE NOTED AT THE DEEPER DEPTHS.

b. If inspections of the system/component during the controlled dive are satisfactory, the DSS is released for operations with no immediate report required. Clearance of the DFS will be reported as required by Part III, Chapter 8 of this volume.

c. If inspections of the system/component during the initial submergence or subsequent deeper depths are unsatisfactory:

(1) The DSS is not authorized manned operations at any depth.

(2) The DSS is restricted to a depth of 200 feet unless specific authorization is received from the Type Commander (TYCOM) approving unmanned operations at depths deeper than 200 feet.

(3) An immediate report of unsatisfactory inspections will be made to the ISIC.

d. If unmanned operations at depths greater than 200 feet are required, the Commanding Officer/Officer-in-Charge shall provide justification and request approval from the TYCOM (info ISIC, NAVSEA, 07Q and applicable Program Executive Officer) to conduct unmanned operations at depths deeper than 200 feet.

e. Deficiencies discovered that are not joints specified for inspection in the MCR/REC and DFS shall be dispositioned as required by Part III, Chapter 8 of this volume and are not cause for depth restrictions unless the Commanding Officer/Officer-in-Charge deem necessary.

5.11.5 Voyage or At-Sea Repairs. If emergent repairs or at-sea repairs involve REC work, the ship/DSS is limited to 200 feet or less until the ship's Commanding Officer has signed for the closed REC.

5.11.6 Exceptions to Re-Entry Control. Certain systems and equipment within the certified SOC boundary require frequent entry into the certified boundary for routine operations or maintenance actions in order to enable the ship to carry out its mission. These systems and components are listed in the DSS SOC Notebook. The operational requirements for these systems and equipment have been reviewed. Inherent operational controls in the present system are considered adequate and the items are considered safe exceptions to the formalized REC system. The operational control which is considered as meeting the intent of the REC requirements is specified in the DSS SOC Notebook and must be in effect in order to use the exception. Some REC exceptions permit removal of material from the installed system to perform maintenance or testing. The original material must be reinstalled or a complete REC (controlled work package) must be used to capture the installation of new Material Control Division A, B or C material and/or certification testing for new material.

NOTE: MCR/REC EXCEPTIONS ARE FOR USER ACTIVITY'S USE ONLY AND ARE NOT AUTHORIZED FOR USE BY REPAIR ACTIVITIES. REPAIR ACTIVITIES SHALL NOT REQUEST THE SHIP TO INVOKE A REC EXCEPTION IN CONJUNCTION WITH REPAIR ACTIVITY WORK UNLESS SPECIFICALLY AUTHORIZED BY THE USER ACTIVITY'S SOC NOTEBOOK.

5.11.6.1 Controlled Assembly Requirements for SOC REC Exceptions.

a. An FWP in accordance with Part I, Chapter 2 of this volume, (e.g., PMS MRC, technical manual pages, detailed maintenance outline), will be used to control and document all work performed as a REC exception.

b. Controlled Assembly requirements are:

(1) Verification that surface finishes of gasket/O-Ring sealing surfaces are in accordance with applicable specifications.

(2) Verification that fastener material and installation is in accordance with applicable specifications.

(3) Verification that gaskets/O-Rings are properly installed and in accordance with applicable specifications.

(4) Assembly is documented on a QA form 34 or 34B as applicable.

(5) Inspected by a Quality Assurance Inspector or Quality Assurance Supervisor.

(6) For piping systems, the re-certification test is an operational test to system operating pressure. The SOC Notebook, system drawings, technical manuals and other applicable specifications should be consulted to determine if a retest is required for REC Exempt maintenance on other components or systems.

5.11.7 Certification Continuity Report. In order to ensure continued certification of each DSS, periodic reports are required as follows:

a. Prior to each manned operation, except as discussed in reference (a), paragraph 3.7.4, the User Activity will submit to the ISIC (deployed ISIC, if deployed), a written certification continuity report, which addresses the status of the DSS SOC RECs, testing of SOC RECs, HIPs completed and RECs closed by transferring actions to a DFS. Submarines shall submit this report to the ISIC prior to manned operations and/or each underway for submerged operations. Appendix A provides the minimum requirements for the letter or message. If no SOC controlled work, testing or HIPs were accomplished, no report is required.

b. Prior to the DSS submerged operations after an FMA availability, refit or inport period when SOC work was performed, the FMA Commanding Officer will issue a letter report to each tended DSS, with a copy to the Sustaining Activity and parent ISIC, which addresses the status of SOC CWPs, testing of SOC systems, HIP maintenance requirements completed and SOC non-conformances (i.e., DFS and LAR). Appendix B provides the minimum requirements for the letter or message. Voyage repair periods and availability planning periods are not considered FMA availabilities.

c. Prior to the DSS underway, activities other than FMAs which perform SOC maintenance on a DSS will issue a report to the DSS with a copy to the Sustaining Activity and parent ISIC, certifying that the maintenance performed meets the requirements of applicable specifications invoked by the governing document and the Memorandum of Agreement.

d. In order to ensure continued certification of those DSSs that frequently change custody between activities such as the Dry Deck Shelters, off-loads and on-loads will use the format of Appendix C and D respectively to transfer custody of the vehicle. The receiving activity will conduct a review of the items identified in the transfer of custody letter/message and then report acceptance of custody using the format of Appendix E.

5.12 MATERIAL CONDITION MONITORING (SUBMARINES ONLY).

5.12.1 Hull Integrity Procedures Program.

a. The HIP Program is applicable to specific DSS. The program provides the minimum material condition requirements to Sustain Certification, with an established periodicity to accomplish. It is one of the programs required to maintain SOC certification. Accomplishment of the HIP will identify changes within the SOC or hull integrity boundaries of the ship, which result from the degradation caused by the service environment.

b. Administration, scheduling and reporting of the HIP program will be in accordance with the requirements of Volume VI, Chapter 38 of this manual. A summary of HIP status will be reported by the DSS User Activity in accordance with paragraph 5.11.7 of this chapter.

c. When performing corrective maintenance the following guidance is provided with regard to HIPs:

(1) When performing corrective maintenance, associated HIP should be reviewed to determine if the HIP should be accomplished concurrently ahead of scheduled periodicity to preclude having to disassemble equipment again to accomplish the HIP. The DSS schedule or FMA resources may preclude concurrent, early accomplishment of HIPs.

(2) If HIP criteria are used, in total or in part, during corrective maintenance, and a measured parameter is found out of tolerance and not restored, a major DFS must be submitted, in accordance with Part III, Chapter 8 of this volume, even though the periodicity of the HIP MRC has not expired.

(3) When performing corrective maintenance that does affect a HIP measured parameter, perform that portion of the applicable HIP.

d. Following installation of an alteration (Field Change, Temporary Modification) that modifies the structure of the DSS, such that access to vital equipment is or may be impacted, the Sustaining Activity shall evaluate the need to perform the Access to Vital Equipment DSS HIP. If access to vital equipment could be restricted, the Sustaining Activity shall perform the applicable DSS HIP. Partial accomplishment of the DSS HIP is acceptable if appropriate for the alteration. If partial accomplishment is performed, provide a copy to the installing activity and the ISIC. If the complete DSS HIP is accomplished, provide a copy to normal distribution.

5.13 TEMPORARY MODIFICATIONS. The User Activity/Sustaining Activity shall obtain formal approval from the Program Manager for any use of special equipment or modification of a DSS unit on a temporary basis.

5.13.1 Temporary Modification Program. NAVSEA PMS 399 and 07 have established a Temporary Modification Program. Each User Activity/Sustaining Activity shall manage Temporary Modifications to DSS as directed in reference (e).

NOTE: TEMPORARY MODIFICATIONS APPROVED FOR USE ON ONE DSS UNIT WILL NOT BE INSTALLED ON ANOTHER DSS UNIT WITHOUT PRIOR APPROVAL OF THE PROGRAM MANAGER WITH SCA CONCURRENCE.

5.13.2 Configuration Control. Installation of a previously approved temporary modification on the same unit is authorized only when the approval documentation is available and contains approval for re-installation for continuing use.

APPENDIX A

MESSAGE FORMAT FOR CERTIFICATION CONTINUITY FOR DSS

(May be issued as a letter)

FM (SUBMITTING UNIT)
TO (ISIC)
(SUSTAINING ACTIVITY)
(DEPLOYED ISIC) (IF APPLICABLE)
INFO (PARENT ISIC) (APPLICABLE IN ALL CASES WHEN DEPLOYED)
(ADDITIONAL ADDEES)
BT
(CLASSIFICATION)//N04790//
SUBJ/CERTIFICATION CONTINUITY//
MSGID/GENADMIN/_____ (DSS UNIT)//
REF/A/DOC/COMFLTFORCOMINST 4790.3/DATE OF LATEST CHANGE//
REF/B/DOC/NAVSEA/DATE OF LATEST LETTER//
REF/C/DOC/NAVSEA/DATE OF LATEST LETTER//
REF/D/DOC/NAVSEA/DATE OF LATEST CHANGE//
AMPN/REF A IS JOINT FLEET MAINTENANCE MANUAL, REF B IS NAVSEA LTR FOR MISSION CONFIGURATION MATRIX, REF C IS NAVSEA CERTIFICATION LETTER, REF D IS SYSTEMS CERTIFICATION PROCEDURES AND CRITERIA MANUAL FOR DEEP SUBMERGENCE SYSTEMS//
RMKS/1. IAW REF A ALL WORK PERFORMED WITHIN THE SCOPE OF CERTIFICATION BOUNDARY FOR DESIGNATED MISSION CONFIGURATION(S) HAS BEEN COMPLETED AND SATISFACTORILY RETESTED. ALL SYSTEM/SUB-SECTIONS AND COMPONENTS REQUIRED BY THE MISSION CONFIGURATION MATRIX ARE OPERATING WITHIN APPROVED PARAMETERS AS SPECIFIED IN REF B. THERE ARE NO OUTSTANDING RECS FOR SCOPE OF CERTIFICATION EQUIPMENT/SYSTEMS.
2. THE MISSION CONFIGURATION, AS DEFINED IN REF B FOR INTENDED DIVES IS (ARE):
3. THE FOLLOWING EXTERNAL JOINT TIGHTNESS TESTS WILL BE CONDUCTED DURING A CONTROLLED DIVE TO TEST DEPTH.
4. THE FOLLOWING APPROVED DFS ITEMS ARE IN EFFECT:
DEPARTURE NO./MAJOR/MINOR SYSTEM/COMPONENT OPERATIONAL LIMITATIONS
5. THE FOLLOWING IS A LIST OF ALL APPROVED TEMPORARY MODIFICATIONS (TEMP MODS) WHICH ARE INSTALLED IN _____ (DSS UNIT):
INCLUDE TEMP MOD NUMBER AND STATE COMBINED IMPACT OF INSTALLED TEMP MODS ON VEHICLE STABILITY INCLUDING WEIGHT/MOMENT AND ANY OPERATION RESTRICTIONS ASSOCIATED WITH A SPECIFIC TEMP MOD.
6. ALL REQUIRED PMS WITHIN THE SCOPE OF CERTIFICATION BOUNDARY FOR _____ (DSS UNIT) HAS BEEN COMPLETED WITHIN THE REQUIRED PERIODICITY AND THE RESULTS ARE SATISFACTORY (EXCEPT AS NOTED BELOW).
7. THERE ARE NO OPEN CATEGORY IA, CATEGORY IB, OR CATEGORY IC SURVEY CARDS THAT AFFECT MANNED OPERATIONS. OPEN SURVEY CARDS ARE LISTED BELOW:
INCLUDE CARD NUMBER, CATEGORY, DESCRIPTION, DUE DATE//
BT

NOTE: ENSURE MESSAGES ARE IN ACCORDANCE WITH NTP-3 FORMAT AND CURRENT PLAIN LANGUAGE ADDRESS DIRECTORY (PLAD) IS UTILIZED.

(This Page Intentionally Left Blank)

APPENDIX B

LETTER FORMAT FOR CERTIFICATION REPORT TO TENDED DSS

From: Commanding Officer, _____ (Sustaining Unit/Fleet Maintenance Activity (FMA)/Ship Yard/Contractor)
To: Commanding Officer/Officer in Charge _____ (TENDED DSS UNIT)

Subj: CERTIFICATION CONTINUITY OF _____ (TENDED DSS UNIT)

Ref: (a) COMFLTFORCOMINST 4790.3, Joint Fleet Maintenance Manual
Encl: (1) Copies of completed Quality Assurance Certification Form/Re-Entry Control Forms
(2) Copies of approved Departures from Specification

1. In accordance with reference (a), certification of those systems or portions of systems, on which (_____) performed maintenance has been sustained. All required re-certification of the maintenance has been completed except as noted in paragraph 2 and 3 below.

2. All CWPs opened for Scope of Certification maintenance have been closed. A copy of each completed QA-form 9 is forwarded as enclosure (1). RECs closed by transferring testing to a DFS are listed below:

CWP/REC Serial Number	Task Description	Testing Required

3. The following Departures from Specifications (DFS) and Liaison Action Requests (LAR) for deviations from specification were approved as part of maintenance in this availability. Copies of each are provided as enclosure (2):

CWP Serial No.	DFS or LAR Serial No.	Type	Component

4. The following HIP maintenance requirements were satisfied and are reported as complete by the (FMA/Ship Yard/Contractor). The original data report forms will be mailed to SUBMEPP with copies to your ISIC and TYCOM within 30 days.

HIP	EGL (if applicable)	Component Identification	JCN

Signed by Fleet Maintenance Activity/
Ship Yard/Contractor

Copy to:
Parent ISIC
TYCOM

(This Page Intentionally Left Blank)

APPENDIX C

MESSAGE FORMAT FOR DDS TRANSFER OF CUSTODY CERTIFICATE OF CONTINUITY FOR OFF-LOADS

FM (HOST SHIP)//
TO (DDS UNIT)//
INFO ISIC// (NOTE 1)//
TYCOM// (NOTE 2)//
(ADDITIONAL ADDEES)//
BT
(CLASSIFICATION)//
SUBJ/TRANSFER OF CUSTODY OF DDS-___//
MSGID/GENADMIN/(HOST SHIP)//
REF/A/DOC/COMNAVSPECWARCOM/DATE OF LATEST CHANGE//
REF/B/DOC/NAVSEA/DATE OF LATEST CHANGE//
REF/C/DOC/NAVSEA/DATE OF LATEST CHANGE//
REF/D/DOC/NAVSEA/DATE OF LATEST CHANGE//
AMPN/REF A IS MOA BETWEEN COMNAVSPECWARCOM, COMSUBLANT, AND COMSUBPAC, REF B IS P-9290 SYSTEM CERTIFICATION PROCEDURES AND CRITERIA MANUAL FOR DEEP SUBMERGENCE SYSTEMS, REF C IS DDS SCOPE OF CERTIFICATION NOTEBOOK, REF D IS DDS (SSGN/688CL/VA CL) OPS AND EPS FOR DDS OPERATIONS.//
POC/___/RANK/UNIT/LOCATION/EMAIL/
RMKS/1. IAW REF (A), REQUEST (DDS UNIT) ACCEPT CUSTODY OF DDS-( ).
2. DDS CERTIFICATION AND CLEANLINESS OF THE DIVERS AIR SYSTEM OF DDS-( ) HAVE BEEN MAINTAINED IN ACCORDANCE WITH THE REQUIREMENTS OF REFS (B) AND (C). ALL MAINTENANCE AND REPAIRS PERFORMED WHILE IN CUSTODY OF (HOST SHIP) HAVE BEEN COMPLETED IN ACCORDANCE WITH APPROVED SPECIFICATIONS AND TEST PROCEDURES.
3. (HOST SHIP) WILL TURN OVER CUSTODY OF REC, DFS, EQUIPMENT STATUS AND TEMPMOD LOGS; REC EXCEPTION RECORDS; PMS SCHEDULES AND MRCS; CALIBRATION RECORDS; HIP RECORDS AND MRCS FOR DDS-( ) TO (DDS UNIT). CURRENT STATUS OF REC AND DFS AS FOLLOWS:
   A. IDENTIFY EACH OPEN REC INCLUDING A BRIEF DESCRIPTION OF THE WORK INVOLVED. IF NO RECs ARE OPEN AT THE TIME OF CUSTODY TRANSFER, STATE THIS FACT.
   B. IDENTIFY ALL ACTIVE DFSs INCLUDING A BRIEF DESCRIPTION, CRITERIA FOR CLEARANCE, ANY OPERATING RESTRICTIONS, APPROVAL AUTHORITY ASSOCIATED WITH EACH DFS. IF NO DFSs ARE ACTIVE AT THE TIME OF CUSTODY TRANSFER, STATE THIS FACT.
4. CERTIFICATION REQUIREMENTS PERFORMED DURING HOST CUSTODY INCLUDE:
   A. IDENTIFY EACH DDS INTERNAL AUDIT AND SCA SURVEY DUE DURING THE CUSTODY PERIOD.
   B. IDENTIFY EACH HIP PERFORMED DURING THE CUSTODY PERIOD.
   C. IDENTIFY EACH OUTSTANDING SCA CAT IA, IB, AND IC SURVEY CARDS.
5. GAS PODS (WILL/WILL NOT) BE INCLUDED IN THE TRANSFER.
6. STATE THAT EITHER ALL PMS FOR DDS-( ) IS CURRENT AT THE TIME OF CUSTODY, OR IDENTIFY ANY REQUIRED PMS THAT HAS BEEN DEFERRED OR RESCHEDULED.
7. DDS-( ) SHALL BE REMOVED IN ACCORDANCE WITH THE APPROPRIATE STANDARD OPERATING PROCEDURE OF REF (D). (DDS UNIT) IS RESPONSIBLE FOR ENSURING THAT ALL DDS PORTABLE EQUIPMENT IS INSTALLED, ALL PIPING INTERFACES AND ELECTRICAL HULL FITTINGS ARE PROPERLY HANDLED, AND ALL THREAD SAVERS AND PORTABLE FAIRING ARE PROPERLY REINSTALLED.//
BT

NOTE:

1. Office codes for ISICs are: COMNAVSPECWARGRU THREE N9; NSSC PEARL HARBOR HI N432; NSSC BANGOR WA N432; NSSC KINGS BAY GA N40A; COMREGSUPPGRU GROTON CT N40. Include NSW ISIC, Host Submarine home ISIC, and deployed ISIC (if applicable).

2. Office codes for TYCOMs are: COMNAVSPECWARCOM CORONADO CA N844; COMSUBLANT NORFOLK VA N4322; COMSUBPAC PEARL HARBOR HI N4322.

3. Include NAVSEA 07Q4 and PMS 399 Program Manager for informational purposes.

4. Naval message is the preferred method to report transfer of custody. Naval correspondence may be used only if message traffic is unavailable. If correspondence is used, ensure message distribution list is followed.

NOTE: ENSURE MESSAGES ARE IN ACCORDANCE WITH NTP-3 FORMAT AND CURRENT PLAD IS UTILIZED.

APPENDIX D

MESSAGE FORMAT FOR DDS TRANSFER OF CUSTODY CERTIFICATE OF CONTINUITY FOR ON-LOADS

FM (DDS UNIT)//
TO (HOST SHIP)//
INFO ISIC// (NOTE 1)//
TYCOM// (NOTE 2)//
(ADDITIONAL ADDEES)//
BT
(CLASSIFICATION)//
SUBJ/TRANSFER OF CUSTODY OF DDS-___//
MSGID/GENADMIN/(DDS UNIT)//
REF/A/DOC/COMNAVSPECWARCOM/DATE OF LATEST CHANGE//
REF/B/DOC/NAVSEA/DATE OF LATEST CHANGE//
REF/C/DOC/NAVSEA/DATE OF LATEST CHANGE//
REF/D/DOC/NAVSEA/DATE OF LATEST CHANGE//
AMPN/REF A IS MOA BETWEEN COMNAVSPECWARCOM, COMSUBLANT, AND COMSUBPAC, REF B IS P-9290 SYSTEM CERTIFICATION PROCEDURES AND CRITERIA MANUAL FOR DEEP SUBMERGENCE SYSTEMS, REF C IS DDS SCOPE OF CERTIFICATION NOTEBOOK, REF D IS DDS (SSGN/688CL/VA CL) OPS AND EPS FOR DDS OPERATIONS.//
POC/___/RANK/UNIT/LOCATION/EMAIL/
RMKS/1. DDS-( ) IS SCHEDULED TO BE ON-LOADED TO (HOST SHIP) ON (ON-LOAD DATE). UPON INSTALLATION OF THE DDS ONTO (HOST SHIP) REQUEST (HOST SHIP) ACCEPT CUSTODY FROM (DDS UNIT) PER REF (A).
2. DDS CERTIFICATION AND CLEANLINESS OF THE DIVERS AIR SYSTEM OF DDS-( ) HAVE BEEN MAINTAINED IN ACCORDANCE WITH THE REQUIREMENTS OF REFS (B) AND (C). ALL MAINTENANCE AND REPAIRS PERFORMED WHILE IN CUSTODY OF (DDS UNIT) HAVE BEEN COMPLETED IN ACCORDANCE WITH APPROVED SPECIFICATIONS AND TEST PROCEDURES.
3. (DDS UNIT) WILL TURN OVER CUSTODY OF REC, DFS, EQUIPMENT STATUS AND TEMPMOD LOGS; REC EXCEPTION RECORDS; PMS SCHEDULES AND MRCS; CALIBRATION RECORDS; HIP RECORDS AND MRCS FOR DDS-( ) TO (HOST SHIP). CURRENT STATUS OF REC AND DFS AS FOLLOWS:
   A. IDENTIFY EACH OPEN REC INCLUDING A BRIEF DESCRIPTION OF THE WORK INVOLVED. IF NO RECs ARE OPEN AT THE TIME OF CUSTODY TRANSFER, STATE THIS FACT.
   B. IDENTIFY ALL ACTIVE DFSs INCLUDING A BRIEF DESCRIPTION, CRITERIA FOR CLEARANCE, ANY OPERATING RESTRICTIONS, APPROVAL AUTHORITY ASSOCIATED WITH EACH DFS. IF NO DFSs ARE ACTIVE AT THE TIME OF CUSTODY TRANSFER, STATE THIS FACT.
4. CERTIFICATION REQUIREMENTS DUE DURING HOST CUSTODY INCLUDE:
   A. IDENTIFY EACH DDS INTERNAL AUDIT AND SCA SURVEY DUE DURING THIS PERIOD.
   B. IDENTIFY EACH HIP DUE DURING THIS PERIOD.
   C. IDENTIFY EACH OUTSTANDING SCA CAT IA, IB, AND IC SURVEY CARDS.
5. GAS PODS (WILL/WILL NOT) BE INCLUDED IN THE TRANSFER.
6. STATE THAT EITHER ALL PMS FOR DDS-( ) IS CURRENT AT THE TIME OF CUSTODY, OR IDENTIFY ANY REQUIRED PMS THAT HAS BEEN DEFERRED OR RESCHEDULED.
7. DDS-( ) IS BEING INSTALLED IN ACCORDANCE WITH THE APPROPRIATE STANDARD OPERATING PROCEDURE OF REF (D). (DDS UNIT) IS RESPONSIBLE FOR ENSURING THAT ALL DDS PORTABLE EQUIPMENT IS INSTALLED, ALL PIPING INTERFACES AND ELECTRICAL HULL FITTINGS ARE PROPERLY HANDLED, AND ALL THREAD SAVERS AND PORTABLE FAIRING ARE PROPERLY CONTROLLED.//
BT

NOTE:

1. Office codes for ISICs are: COMNAVSPECWARGRU THREE N9; NSSC PEARL HARBOR HI N432; NSSC BANGOR WA N432; NSSC KINGS BAY GA N40A; COMREGSUPPGRU GROTON CT N40. Include NSW ISIC, Host Submarine home ISIC, and deployed ISIC (if applicable).

2. Office codes for TYCOMs are: COMNAVSPECWARCOM CORONADO CA N844; COMSUBLANT NORFOLK VA N4322; COMSUBPAC PEARL HARBOR HI N4322.

3. Include NAVSEA 07Q4 and PMS 399 Program Manager for informational purposes.

4. Naval message is the preferred method to report transfer of custody. Naval correspondence may be used only if message traffic is unavailable. If correspondence is used, ensure message distribution list is followed.

NOTE: ENSURE MESSAGES ARE IN ACCORDANCE WITH NTP-3 FORMAT AND CURRENT PLAD IS UTILIZED.

APPENDIX E

MESSAGE FORMAT FOR DDS ACCEPTANCE OF CUSTODY

FM (HOST SUBMARINE OR DDS UNIT)
TO (HOST SUBMARINE OR DDS UNIT)
INFO ISIC// (NOTE 1)
TYCOM// (NOTE 2)
COMNAVSEASYSCOM WASHINGTON DC//PMS 399/07Q4// (NOTE 3)
(ADDITIONAL ADDEES)
BT
(CLASSIFICATION)//
SUBJ/ACCEPTANCE OF CUSTODY OF DDS-___//
MSGID/GENADMIN/_____ (HOST SUBMARINE OR DDS UNIT)//
REF/A/ DOC/COMFLTFORCOMINST 4790.3/DATE OF LATEST CHANGE//
REF/B/ MSG OR DOC/HOST SUBMARINE OR DDS UNIT/DATE OF LETTER OR MESSAGE DTG//
AMPN/REF A IS JOINT FLEET MAINTENANCE MANUAL, REF B IS TRANSFER OF CUSTODY MESSAGE OR LETTER//
RMKS/1. PER REF A, _____ (HOST SUBMARINE OR DDS UNIT) HAS REVIEWED THE CONTENT OF REF B AND ACCEPTS CUSTODY OF DDS-____.
BT

NOTE:

1. Office codes for ISICs are: COMNAVSPECWARGRU THREE N9; NSSC PEARL HARBOR HI N432; NSSC BANGOR WA N432; NSSC KINGS BAY GA N40A; COMREGSUPPGRUGROTON CT N40. Include NSW ISIC, Host Submarine home ISIC, and deployed ISIC (if applicable).

2. Office codes for TYCOMs are: COMNAVSPECWARCOM CORONADO CA N844; COMNAVSUBFOR NORFOLK VA N4322; COMSUBPAC PEARL HARBOR HI N4322

3. Include NAVSEA 07Q4 and PMS 399 Program Manager for informational purposes.

4. Naval message is the preferred method to report acceptance of custody. Naval correspondence may be used only if message traffic is unavailable. If correspondence is used, ensure message distribution list is followed.

NOTE: ENSURE MESSAGES ARE IN ACCORDANCE WITH NTP-3 FORMAT AND CURRENT PLAD IS UTILIZED.

(This Page Intentionally Left Blank)

VOLUME V

PART III

CHAPTER 6

MATERIAL CONTROL

REFERENCES.

(a) NAVSEA 0948-LP-045-7010 - Material Control Standard (Non-Nuclear)
(b) NAVSEA SS800-AG-MAN-010/P-9290 - System Certification Procedures and Criteria Manual for Deep Submergence Systems
(c) NAVSEA 0924-LP-062-0010 - Submarine Safety (SUBSAFE) Requirements Manual

6.1 PURPOSE. To define responsibility and provide guidance for material control which includes procurement, receipt inspection, stowage, issue, in-process control and records for controlled material used in maintenance.

6.1.1 Discussion. Material Control Divisions (MCD) will be used to define levels of control and Objective Quality Evidence (OQE) within the Scope of Certification (SOC) boundary. Material will be controlled as either MCD A, B or C depending on its application. Controlled material is the term used in this manual to describe those materials designated for use in or removed from SOC boundary which are in the custody of the end-user work center, division Controlled Material Petty Officer (CMPO) or are undergoing receipt inspection, have been certified for use and are tagged with the appropriate Quality Assurance (QA) forms of this manual. In this manual, material in the custody of the Naval supply system, which includes the supply departments onboard ships, Fleet Maintenance Activities (FMA) and contractors is not classified as MCD A, B, or C.

6.2 CONTROLLED MATERIAL DETERMINATION. This section describes the use of the specific references used to identify proper material for repair work. This section also provides references and guidance necessary to obtain this understanding and to determine if controlled material is required, and if so, the proper level of control.

6.2.1 General Requirements. In order to determine the correct material to be installed in a Deep Submergence System (DSS) and to properly certify the material prior to installation, the work center responsible for the specific area of the DSS must first gather the appropriate reference material as follows:

a. Naval Sea Systems Command (NAVSEA) approved "List of Material" or "Component List" which may be part of a drawing, diagram or may be a separate document.

b. Component technical manual.

c. Applicable Allowance Parts List from the ship's Coordinated Shipboard Allowance List.

6.2.2 Scope of Certification Material Control Divisions. SOC components will be controlled as MCD A, B or C. The definitions and scope of boundaries for each MCD are as listed below.

a. Material Control Division A: Any material in a manned DSS whose single failure would result in DSS loss with DSS personnel on board or death of the DSS personnel. As such MCD-A is assigned to any component for which back-up protection is not feasible and therefore even a single failure is unacceptable. Types of MCD-A material are:

(1) Components exposed to the differential pressure between sea pressure and DSS internal atmospheric pressure.

(2) Components that operate at greater than 400 psig which are internal to the DSS and cannot be isolated from the pressure source either by a directly accessible or remotely operated shut off valve.

(3) Any piping that penetrates the pressure hull from the pressure hull to and including the inboard flange of the first directly accessible or remotely operated shut-off valve.

(4) All oxygen and hydrogen systems with a design pressure of 100 psig and above.

(5) Components within an emergency or back-up system (e.g., jettison and emergency life support systems and release devises for external appendages) where maximum assurance that the system will operate when needed is essential to preventing a single failure in a primary system from resulting in the death or injury of DSS personnel.

(6) Components such as pressure hull (plate, forgings, castings, weld filler material, inserts and penetrations) hard structure, pressure storage tanks and flasks located in manned spaces, high pressure or sea connected piping components including mechanical joints and associated fasteners.

b. Material Control Division B: Any material or component where failure would require immediate emergency corrective action, the activation of any emergency system or emergency return to the surface. MCD-B material includes:

(1) Low pressure (<400 psig) piping and component assemblies in the primary and back-up life support systems.

(2) The portion of the electrical power distribution system exposed to sea pressure.

(3) Instruments and sensors used to monitor external ambient conditions.

(4) Instruments and sensors used to monitor or control DSS functions.

(5) Hoses, tethers and umbilicals providing life support or thermal protection.

(6) All SOC piping and piping components external to manned spaces.

(7) All other low pressure (<400 psig) SOC piping and piping components within the manned spaces not otherwise classified as MCD-A.

(8) Mechanical joints and fasteners, not otherwise classified as MCD-A, used on SOC piping systems and piping components.

c. Material Control Division C: Any SOC material that is not classified as either MCD-A or MCD-B. MCD-C material includes:

(1) Emergency electrical power distribution systems.

(2) Portions of the main electrical power distribution system and electrical components not classified as MCD-A or MCD-B.

(3) Soft goods such as O-rings, gaskets and seals.

6.3 RECEIPT INSPECTION OF CONTROLLED MATERIAL. This section provides the guidance and procedures for Sustaining Activities/User Activities and FMAs to conduct and document receipt inspections to certify controlled material as acceptable for installation.

NOTE: THE TECHNICAL INSPECTION REQUIREMENTS OF THE APPLICABLE TECHNICAL MANUAL, DRAWING OR OTHER TECHNICAL REFERENCE AND PIPING SYSTEM MATERIAL REQUIREMENTS (E.G., CLEANLINESS, DIMENSIONS, SURFACE FINISH) ARE THE

RESPONSIBILITY OF THE END-USER (WORK CENTER SUPERVISOR/ CRAFTSMAN) TO ACCOMPLISH PRIOR TO INSTALLATION AND ARE NOT PART OF THE RECEIPT INSPECTION OF THIS MANUAL.

NOTE: IN SOME PROGRAMS, A CERTIFICATE OF CONFORMANCE (COC) IS ISSUED BY THE NAVY SUPPLY SYSTEM OR THE CONTRACTOR MANAGING THE STOCK PROGRAM FOR THE NAVY. NAVSEA HAS AUTHORIZED THE SUPPLY SYSTEM OR CONTRACTOR TO RETAIN ALL REQUIRED DOCUMENTS AND ISSUE THE COC TO THE SUSTAINING/USER ACTIVITY AS SUPPORTING DOCUMENTATION FOR RECEIPT INSPECTION. THE SUSTAINING/USER ACTIVITY MAY REQUEST ALL SUPPORTING DOCUMENTATION FROM THE CONTRACTOR AT ANYTIME.

6.3.1 General Requirements. Once the material ordered for use in SOC systems is received, the material must be receipt inspected. Receipt inspection of this material is required to establish positively that the material is the correct material for the job. For SOC MCD-A material, a unique marking system is required for "traceability" which links the material to OQE. OQE for the material is the quantitative and qualitative data proving that the material conforms to specified requirements. To meet the requirements for traceability, the following requirements are instituted:

a. Receipt inspection of the material.

b. Use of QA tags in association with the item(s).

c. Segregated stowage for SOC stock program material and controlled material.

d. Custody by CMPO/Controlled Material Handlers (CMH), Quality Assurance Inspectors (QAI) or qualified craftsman.

e. Use of material verification procedures, as required by reference (a), during installation of the material.

f. SOC material directly procured from Electric Boat or Electric Boat provided interim spares and initial outfitting may be received with special tags, titled “Record of DSS-SOC Receipt Inspection” (Figure 6-1) that denote all inspection and certification attributes have been met except a physical inspection to confirm the material was not damaged in shipping.

(1) The blue tags, if received, will be retained as OQE and used to receipt inspect material.

(2) The blue tags must have the part number and stock number of the material ordered and the material received must be the material ordered.

g. Non-Nuclear Level 1 material ordered for a SOC application, as defined by the ship’s Allowance Parts List, and received from the naval supply system with Material Identification and Control (MIC) numbers, may be used in SOC applications on all submarines.

(1) The MIC satisfies:

(a) Material Marking Requirements

(b) Records of Chemical and Mechanical Tests

(c) Records of Nondestructive Testing

(d) Records of Testing

(e) Certification of Compliance

(2) The MIC does not satisfy:

(a) Unique DSS-SOC OQE

(b) Lubrication and Thread Locking

(c) Paints

(d) Unique Clean Requirements

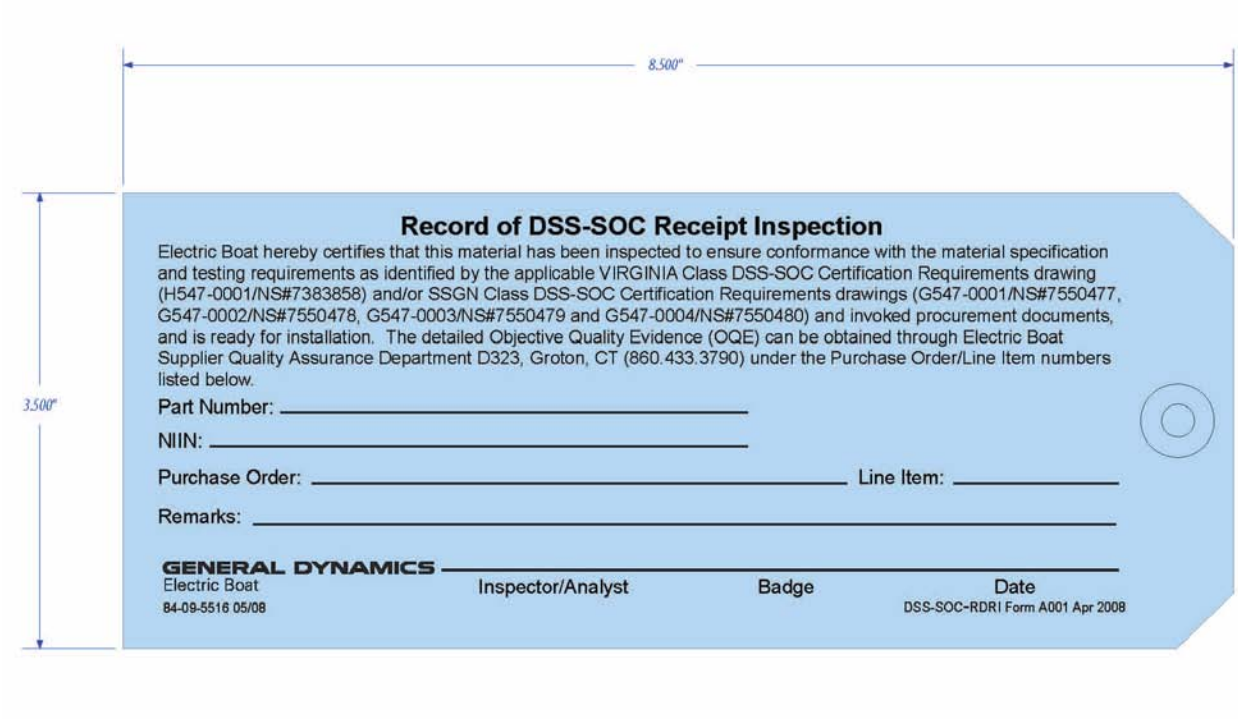

Figure 6-1 Record of DSS-SOC Receipt Inspection

6.3.2 Quality Assurance Forms for Receipt Inspections. The QA forms necessary to complete and document receipt inspections (QA form 1, QA form 2 and QA form 3) and instructions are found in Part I, Chapter 11 of this volume and are further discussed in paragraph 6.3.3 of this chapter.

6.3.3 General Requirements for Receipt of Scope of Certification Material. Material for SOC systems may be procured either through the Navy stock system or via contractors assigned by NAVSEA to supply the specific units. This section contains the requirements for receipt inspection and control of new materials. Section 6.4 of this chapter contains the requirements for handling controlled material removed from a DSS for maintenance purposes.

a. Receipt of MCD-A material from either the Navy stock system or contractor/activity assigned by the Program Manager to supply the specific DSS will be receipt inspected by the CMPO and certified by the Quality Assurance Officer (QAO) as follows:

Procedure	Responsibility
Review vendor data, Military Standard (MIL-STD) and/or FMA manufacturing and test data to ensure that it all matches. See note at end of this table regarding vendor data.	Sustaining/User Activity CMPO/CMH/QAI and QAO
Transfer MIC markings from accompanying OQE onto the item if the MIC is not already marked on the item.	Sustaining/User Activity CMPO/CMH/QAI
Fasteners will be appropriately marked and color-coded if required.	Sustaining/User Activity CMPO/CMH/QAI
Fill out QA form 1 to document the receipt inspection.	Sustaining/User Activity CMPO/CMH/QAI

NOTE: QA FORM 1 IS NOT REQUIRED FOR SHIP'S FORCE WHEN PERFORMING RECEIPT INSPECTION OF MATERIAL TO BE IMMEDIATELY INSTALLED FOR A SPECIFIC JOB. IF ALL MATERIAL IS NOT UTILIZED IN THE ONGOING JOB, QA FORM 1 MUST BE FILLED OUT PRIOR TO PLACING THE MATERIAL IN A STOWAGE LOCKER.

NOTE: IF THE COMPONENT HAS A SHORTENED MIC MARKING, ENSURE THE FULL MIC MARKING FROM THE SHIPPING DOCUMENTS, TAGS, AND/OR PACKAGING IS ENTERED ON QA FORM 1 AND QA FORM 2.

File QA form 1 with all applicable documents.	Sustaining/User Activity Quality Assurance Supervisor/QAI/CMPO
Fill out and attach QA form 2 to the item. Turn over material to craftsman or stow in approved storage area.	Sustaining/User Activity CMPO/CMH/QAI
Forward QA form 1 to QA Office when the material has been issued for installation.	CMPO/CMH
If material fails any of above steps, reject the material and attach QA form 3.	CMPO/CMH

NOTE: VENDOR DATA - MATERIAL RECEIVED DIRECTLY FROM THE MANUFACTURER REQUIRES CERTIFICATION DOCUMENTATION IN ACCORDANCE WITH PARAGRAPHS 6.3.3.a.(1) THROUGH 6.3.3.a.(5) OF THIS CHAPTER AS A MINIMUM. A THOROUGH REVIEW OF THE PROCUREMENTS SPECIFICATIONS IS NECESSARY TO ENSURE ALL REQUIREMENTS ARE MET.

(1) Chemical and mechanical testing is required for all metallic material. Chemical and mechanical testing for non-metallic materials as required by material specification.

NOTE: IF ANY ITEM IS CERTIFIED AS LEVEL I, IT IS CONSIDERED AS MEETING THIS REQUIREMENT.

(2) Records of Nondestructive Testing as required by the specification.

(3) Records of testing as required by the specification for implosion testing, cleanliness testing, toxicity or flammability testing, etc.

(4) COC. Certifies that the components comply with the requirements of the procurement documents, invoked specifications and drawings. Asserts that the physical and chemical properties (material type, yield strength, tensile strength, elongation or hardness testing) are as specified in the contract specifications. The certificate will include:

(a) Contractors name, address, phone number and date.

(b) The issuing agency's purchase order number.

(c) Item nomenclature of the purchased item (the product is identified by description, amount, lot number, etc.).

(d) Contractor's or authorized person's signature.

NOTE: INSTALLATION OF MATERIAL ON THE BASIS OF A COC SHALL NOT RELIEVE THE INSTALLING ACTIVITY OF THE RESPONSIBILITY FOR INCORPORATING MATERIAL WHICH CONFORMS TO THE REQUIREMENTS OF THE DRAWINGS AND SPECIFICATIONS. MATERIAL NOT CONFORMING TO THE REQUIREMENTS OF THE DRAWINGS AND SPECIFICATIONS WILL BE SUBJECT TO REJECTION WHETHER IN PLACE OR NOT.

(5) In some cases a Certificate of Test (COT) may be required as evidence that testing was completed. The distinguishing characteristic of a COT is that it presents data which is the result of positive, reproducible testing performed to determine the quality of the product. It may be contained within the COC. The COT, issued by a test laboratory, states that a certain product was tested for certain qualities and shall include:

(a) Contractors name, address, phone number and date.

(b) The issuing agency's purchase order number.

(c) Item nomenclature of the purchased item (the product is identified by description, amount, lot number, etc.).

(d) Contractor's or authorized person's signature.

(e) Test data is given along with the conclusion on conformance or non-conformance.

NOTE: IF ALL TESTING REQUIRED BY REFERENCE (b) CAN NOT BE ACCOMPLISHED, THEN THE NEW COMPONENT CANNOT BE USED UNTIL A DEPARTURE FROM SPECIFICATION (DFS) IS SUBMITTED IN ACCORDANCE WITH PART I, CHAPTER 8 OF THIS VOLUME.

NOTE: MORE THAN ONE MIC NUMBER MAY BE ON A COMPONENT (E.G., VALVE BODY MAY HAVE ONE MIC NUMBER AND THE BONNET MAY HAVE ANOTHER MIC NUMBER). IF THE COMPONENT HAS A SHORTENED MIC MARKING, ENSURE THE FULL MIC MARKING IS AVAILABLE ON THE SHIPPING DOCUMENTS, TAGS AND/OR PACKAGING. VERIFY THAT THE SHORTENED MIC MARKING IS CORRECT IN ACCORDANCE WITH PARAGRAPH 6.3.7 OF THIS CHAPTER AND REFERENCE (a).

b. Receipt of MCD-B material from either the Navy stock system or contractor/activity assigned by the Program Manager to supply the specific DSS will be receipt inspected by the CMPO and certified by the QAO as follows:

Procedure	Responsibility
Review vendor data (if provided with material), MIL-STD, and/or FMA manufacturing and test data to ensure that it all matches. See note at end of this table regarding vendor data.	Sustaining/User Activity CMPO/CMH/QAI/QAO
Fill out QA form 1 to document the receipt inspection.	Sustaining/User Activity CMPO/CMH/QAI
File QA form 1 with all applicable documents.	Sustaining/User Activity Quality Assurance Supervisor/QAI/CMPO

NOTE: QA FORM 1 IS NOT REQUIRED FOR SHIP'S FORCE WHEN PERFORMING RECEIPT INSPECTION OF MATERIAL TO BE IMMEDIATELY INSTALLED FOR A SPECIFIC JOB. IF ALL MATERIAL IS NOT UTILIZED IN THE ONGOING JOB, QA FORM 1 MUST BE FILLED OUT PRIOR TO PLACING THE MATERIAL IN A STOWAGE LOCKER.

NOTE: IF THE COMPONENT HAS A SHORTENED MIC MARKING, ENSURE THE FULL MIC MARKING FROM THE SHIPPING DOCUMENTS, TAGS, AND/OR PACKAGING IS ENTERED ON QA FORM 1 AND QA FORM 2.

Procedure	Responsibility
Fill out and attach QA form 2 to the item. Turn over material to craftsman or stow in approved storage area.	Sustaining/User Activity CMPO/CMH/QAI
Forward QA form 1 to QA Office when the material has been issued for installation.	CMPO/CMH
If material fails any of above steps, reject the material and attach QA form 3.	CMPO/CMH

NOTE: VENDOR DATA - MATERIAL RECEIVED DIRECTLY FROM THE MANUFACTURER REQUIRES CERTIFICATION DOCUMENTATION IN ACCORDANCE WITH PARAGRAPHS 6.3.3.b.(1) THROUGH 6.3.3.c. OF THIS CHAPTER AS A MINIMUM. A THOROUGH REVIEW OF THE PROCUREMENTS SPECIFICATIONS IS NECESSARY TO ENSURE ALL REQUIREMENTS ARE MET.

(1) COC which indicates any of the tests, if required, for implosion testing, cleanliness test, toxicity or flammability testing etc., have been satisfactorily accomplished.

(2) Certification that Hull, Mechanical and Electrical testing was accomplished as required by the specification. The COC must state each contractually invoked test by name and that it was performed satisfactorily. Actual test records are not required to be sighted.

(3) COC that the components comply with the requirements of the procurement documents, including invoked specifications and drawings.

c. Receipt of MCD-C material from either the Navy stock system or contractor/activity assigned by NAVSEA to supply the specific DSS will be receipt inspected by the Craftsman and certified on the applicable QA form by the QAI at installation.

Procedure	Responsibility
Visual inspection at installation to ensure material conforms to specified requirements such as stock number, design dimensions, surface condition, compliance with technical work instructions or any vendor/manufacturer supplied information.	Sustaining/User Activity Craftsman and QAI

NOTE: VENDOR DATA - MATERIAL RECEIVED DIRECTLY FROM THE MANUFACTURER REQUIRES CERTIFICATION DOCUMENTATION IN ACCORDANCE WITH PARAGRAPH 6.3.4 OF THIS CHAPTER AS A MINIMUM.

6.3.4 Verification of Completion of Required Testing. Regardless of the MCD, if implosion testing, cleanliness testing, toxicity or flammability testing etc., are required by the applicable specification or drawing, a review of the OQE for these tests will be conducted prior to installation. If a COC is received with the component, it should be carefully reviewed to ensure that testing was performed satisfactory.

6.4 STORAGE, ISSUE AND HANDLING OF SCOPE OF CERTIFICATION MATERIAL. Refer to Part I, Chapter 6, paragraph 6.3.9 of this volume for process requirements related to storage, staging, issue and handling of SOC material.

6.5 RE-USE OF PREVIOUSLY CERTIFIED SCOPE OF CERTIFICATION MATERIAL.

6.5.1 Material Removed from a Deep Submergence System/Operating Ship. Material removed from a DSS/operating ship to be installed in a SOC application on another DSS/ship is acceptable under the following conditions:

a. Re-Entry Control (REC) is used to document material removal from the supplying ship. The supplying DSS/ship must be certified and REC must still be in effect.

b. The following shall be supplied by the supplying ship to the receiving ship:

(1) All outstanding DFS on the component.

(2) Any applicable technical variance documentation.

(3) The last accomplishment date and category of all applicable Maintenance Requirement Card (MRC) inspections.

(4) All legible component markings shall be documented.

(5) A copy of the supplying ship's REC.

c. Positive control and identification shall be maintained from removal through reinstallation.

d. All documentation listed in paragraph 6.3.1.b of this chapter shall be maintained and filed with the REC package that installs the component on the receiving ship.

e. The receiving activity shall conduct a material receipt inspection to verify the following:

(1) Received component came from a certified system and REC has been maintained and that positive control has been maintained since removal from the supplying activity.

(2) Material marking or tagging on hardware matches material marking on supporting software.

(3) Applicable MRC inspections or any other maintenance actions are current for the intended end use.

(4) End use installation is consistent with the previous service parameters such as the design pressure rating, design temperature rating or system applicability of the component.

f. Receiving activity shall update applicable software to document information and records (e.g., DSS or Ship's Drawing Index for drawing revision) date of last MRC periodicity accomplishment and documentation of outstanding DFS into installing DSS or ship's Current Ship's Maintenance Project.

6.5.1.1 Non-Conforming Material. Material that is received from a DSS/operating ship to be installed in a SOC application that does not meet all the requirements of paragraph 6.4.1 of this Chapter may be acceptable under the specific instances listed below.

a. Material received which is not current with respect to the applicable MRC inspection or any other required maintenance actions that are not current for the intended use shall have the applicable maintenance actions completed. Any inspection or maintenance action not completed must be departed using the process of Part I, Chapter 8 of this volume.

b. Material which has an end use that is not consistent with the previous service parameters shall be subject to and satisfy the testing requirements for a new component installed in the receiving DSS or ship, provided the design is consistent with the intended end use.

6.5.2 Reuse of Scope of Certification Material. Reuse of SOC material from a ship whose certification has lapsed by virtue of inactivation availability is acceptable under the following conditions:

a. Prior to commencement of system disassembly, material identified for transfer must be included in an identification and transfer system designated for this application. This system must provide a means for tagging components to be transferred to preclude compromise of material control integrity through unauthorized re-entry. NAVSEA considers existing tag-out systems as an adequate template for this identification system, however, identification system tags must be durable and clearly discernible from existing "tag-out" system tags.

b. The identification tags must include as a minimum:

(1) The statement that the component is SOC material and that the component is not to be removed until the tag is uniquely marked by the facility conducting the inactivation.

(2) The DSS/Ship hull number (e.g., SSN 752).

(3) System and item identification (e.g., MIC number, ASW-1, etc.).

(4) Activity unique identifier (e.g., PHNSY-657-001).

c. The following shall be supplied by the supplying activity/ship to the receiving ship:

(1) All outstanding DFS on the component.

(2) Any applicable technical variance documentation.

(3) The last accomplishment date and category of all applicable MRC inspections.

(4) All legible component markings shall be documented.

(5) A copy of the supplying ship's REC.

d. All work completed on the material/component after removal from the supplying DSS/ship shall be documented and controlled by a REC.

e. Those fasteners removed which connect a transferred item to equipment or components remaining on board, such as valve flange fasteners, shall not be shipped with the item, since to do so needlessly complicates the certification process.

f. The receiving activity shall conduct material receipt inspection to verify the following:

(1) Attached material identification tag and material marking on the material matches the documentation provided from the facility conducting the inactivation.

(2) End use installation is consistent with the previous service parameters such as the design pressure rating, design temperature rating or system applicability of the component.

g. The receiving activity must complete any maintenance due or overdue for the material. Any inspection not performed or other maintenance action not completed must be departed.

h. The receiving activity must maintain documentation of receipt, inspection, installation and testing of the provided material.

i. The material will be installed using a REC.

6.5.3 Material Recertification Required.

a. Material which does not satisfy the requirements of paragraphs 6.5.1 or 6.5.2 of this chapter shall require full component certification to all DSS program requirements prior to use. Documentation of this certification shall be traceable from the installing activity's REC.

b. If the SOC material to be transferred is designated for non-SOC end use, and if the removal is to be accomplished subsequent to the Inactivation Availability start date, applicable non-SOC transfer requirements are in effect. These requirements for Submarine Safety components are in reference (c) and the requirements for Level I components are in reference (a).

6.5.4 Material Re-certification Following Transfer to Outside Agency. Material transferred to and received from an outside maintenance organization which is not under Joint Fleet Maintenance Manual controls will be handled in the following manner:

Procedure	Responsibility
Remove existing attached QA form 2 and retain in Controlled Work Package for OQE.	Sustaining/User Activity
Transfer existing material using DD 1149 to and from the Outside Agency.	Sustaining/User Activity Department Head
Upon receipt, review vendor data, COC and test data as required by applicable specifications.	Sustaining/User Activity CMPO/CMH/QAI/QAO
Fill out QA form 2 in accordance with Part III, Chapter 11 of this volume and attach to the item. Turn over material to craftsman or stow in approved storage area.	Sustaining/User Activity CMPO/CMH/QAI
Place COC in respective REC for material control documentation.	Sustaining/User Activity QAI/Quality Assurance Supervisor
If material fails any of above steps, reject the material and attach QA form 3.	Sustaining/User Activity CMPO/CMH

VOLUME V

PART III

CHAPTER 7

TESTING REQUIREMENTS

REFERENCES.

(a) NAVSEA SS800-AG-MAN-010/P-9290 - System Certification Procedures and Criteria Manual for Deep Submergence Systems
(b) NAVSEA SS521-AA-MAN-010 - U.S. Navy Diving and Manned Hyperbaric Systems Safety Certification Manual
(c) NAVSEA S9505-AF-MMA-010 - Submarine Non-Nuclear Piping Systems Test Manual

7.1 PURPOSE. To provide additional guidance for Deep Submergence Systems (DSS) that cannot be found in Part 1, Chapter 7 of this volume.

7.2 TESTING REQUIREMENTS. Testing shall be in accordance with Part I, Chapter 7 of this volume with the following additions/exceptions:

a. Hydrostatic Testing Requirements:

(1) Implodable/explodable testing shall be in accordance with references (a) and (b), as applicable. Additional implodable/explodable requirements may be contained in the applicable Scope of Certification Notebook.

(2) Pipe and piping components whose pressure boundary is externally loaded by sea pressure, but whose internal maximum operating pressure is equal to or greater than DSS design test depth pressure, shall only require an internal hydrostatic test.

(3) Pipe and piping components whose pressure boundary is externally loaded by sea pressure, but whose internal maximum operating pressure is less than DSS design test depth pressure, shall only require an external hydrostatic test. Additional guidance on external hydrostatic test requirements is contained in reference (a).

(4) Pipe and piping components that penetrate any hull integrity boundary where a single failure could result in internal flooding of the DSS unit shall be hydrostatically tested from the hull integrity boundary penetration inboard to the first isolation valve at a pressure equal to 150% of DSS design test depth or 150% of system maximum operating pressure, whichever is greater.

(5) Pipe and piping components open to internally pressurized tanks and/or enclosures (including hyperbaric chambers) shall be hydrostatically tested internally from the tank and/or enclosure penetration outboard to the first isolation valve at a pressure equal to the pressure used to hydrostatically test the tank and/or enclosure. These requirements are not applicable to piping and piping components open to compressed gas flasks.

(6) External hydrostatic test acceptance criteria of "no permanent deformation" for pipe shall, in addition to a complete visual inspection, be verified by out of roundness measurements. Out-of-roundness measurements not within the pipe specification, approved drawing or Military Standard 1627 (for pipe bends) shall be cause for rejection of the item.

b. Joint Tightness Testing.

(1) Pipe and piping components whose pressure boundary is externally loaded by sea pressure, but whose internal maximum operating pressure is equal to or greater than DSS design test depth pressure, shall only require an internal joint tightness test.

(2) Pipe and piping components whose pressure boundary is externally loaded by sea pressure, but whose internal maximum operating pressure is less than DSS design test depth pressure, shall require both external and internal joint tightness testing. Note that the ability to conduct external joint tightness testing is extremely limited. This testing is normally deferred using a Controlled Assembly in accordance with Part I, Chapter 7 of this volume, documenting a minor Departure from Specification and retesting during a dive to design test depth.

(3) Pipe and piping components that penetrate any hull integrity boundary, where a single failure could result in internal flooding of the DSS unit, shall be joint tightness tested from the hull integrity boundary penetration inboard to the first isolation valve at a pressure equal to 100% of DSS design test depth pressure or 100% of system maximum operating pressure, whichever is greater.

(4) Pipe and piping components open to internally pressurized tanks and/or structural enclosures (including hyperbaric chambers) shall be joint tightness tested internally from the tank and/or enclosure penetration outboard to the first isolation valve at a pressure equal to 100% of the maximum internal operating pressure of the tank and/or enclosure. These requirements are not applicable to piping and piping components open to compressed gas flasks.

c. Pressure Drop Testing.

(1) Pressure drop testing for oxygen, helium, helium-oxygen, nitrogen and hydrogen diving systems shall be as specified in reference (b).

(2) Pressure drop testing of submarine compressed air systems shall be as specified in reference (c).

d. Objective Quality Evidence. Objective Quality Evidence (OQE) documenting the satisfactory accomplishment of all required testing shall be available and maintained in a format suitable for review and audit. Reference (a), Appendix J contains a detailed list of information which must be documented as OQE for testing. Existing forms contained in Part I, Chapter 11 of this volume do not capture all required OQE data. Forms contained in Part III, Chapter 11 of this volume should be used to support documentation of all reference (a), Appendix J OQE data. In the event standardized forms are not available, it is permissible to modify and use the forms in Part 1, Chapter 11 of this volume and standardize these forms within the Sustaining Activity organization.

e. Operational Test. A test of a system to nominal operating pressure using the system fluid, system pumps and installed system gage(s) vice test instrumentation to determine leak tightness.

(1) A drop test meeting requirements of paragraph 7.2.c. above may be performed as an operational test.

(2) An operational test can be used to satisfy a mechanical joint tightness test.

VOLUME V

PART III

CHAPTER 8

DEPARTURE FROM SPECIFICATIONS

REFERENCES.

(a) NAVSEA SS800-AG-MAN-010/P-9290 - System Certification Procedures and Criteria Manual for Deep Submergence Systems

8.1 PURPOSE. To establish standard procedures to be used for reporting and requesting approval and clearance, at the earliest opportunity, of all non-conforming/departable conditions, Departures from Specification (DFS) associated with Scope of Certification (SOC) systems on Deep Submergence Systems (DSS). The guidance of Part 1, Chapter 8 of this volume and reference (a) should be used for handling DFS situations with the modifications listed below.

8.2 DEPARTURE FROM SPECIFICATION.

a. A DFS is a non-conformance of any certification attribute from the intended or as-certified condition of the DSS. This includes non-conformances to approved drawings, components, specifications, technical manuals, operating and emergency procedures, maintenance procedures and any other authoritative document specifying a certification attribute of the DSS. DFS are identified as either a Deviation or Waiver.

(1) Deviation: A DFS which is requested prior to a planned non-conformance.

(2) Waiver: A DFS which is requested subsequent to the non-conformance occurring.

b. Should any system, equipment or component within the SOC fail to operate within specifications, regardless of how the deficiency is discovered, and repair at the Sustaining Activity level is not practicable prior to a planned underway period, a Major DFS shall be submitted.

8.2.1 Reporting Departures from Specification. It is incumbent upon User Activities, Sustaining Activities, Fleet Maintenance Activities and Immediate Superiors In Command to discuss potential DFS as early as possible (prior to the work close out or component assembly if possible) to determine direction of actions and alternatives to the DFS. Every effort must be made to correct each deficiency prior to equipment/system operation or underway of the DSS.

8.2.2 Approval of Departures from Specification. All SOC DFSs require Program Manager approval with System Certification Authority (SCA) concurrence prior to manned use of the DSS. Immediate Superiors In Command and Type Commanders are required to present all DFS items to the Program Manager for approval, except as noted in the SOC Notebook.

8.2.3 Major and Minor Departure from Specification Classification. These are specified in Part 1, Chapter 8 of this volume and each activities SOC notebook.

8.2.4 General Administrative Requirements. The following requirements pertain to all DFS:

a. The User Activity and Sustaining Activity are responsible for all approved DFS relating to their systems/components until cleared or canceled. When a DFS is approved as a temporary repair requiring rework to correct the discrepancy, the ship referencing the DFS sequential number will initiate a Current Ship's Maintenance Project entry for correction of the discrepant condition. The ship's Quality Assurance Officer will ensure that this action is done.

b. The Sustaining Activity shall maintain a master departure log of all waivers and deviations approved for each DSS. The log shall contain, as a minimum, the following:

(1) DSS unique identifier.

(2) Departure number.

(3) Departure title.

(4) Classification (Major or Minor).

(5) Type of departure (Deviation or Waiver).

(6) Date requested.

(7) Date resolved/approved.

(8) Approval or disapproval status.

(9) Conditional approval comments (if applicable).

(10) A copy of all applicable Naval Sea Systems Command correspondence delegating local approval of DFSs.

c. Each activity shall maintain all DFSs in a form suitable for audit including supporting justification, technical documentation, calculations, rationale and related correspondence.

d. When an activity performs work which results in a conditionally approved DFS or waiver which requires future action (e.g., re-inspection, repair), the ship will submit an OPNAV 4790/2K (or equivalent) with a new Job Sequence Number. This Job Sequence Number will be added to the DFS prior to submission to the Immediate Superior In Command. The Current Ship's Maintenance Project Job Sequence Number will be included in Block 17 of the DFS form.

8.2.5 Submission and Approval of Departures from Specification.

a. A copy of the waiver or deviation shall be forwarded to the applicable asset and it's planning yard. This applies to both approved and/or disapproved waivers and deviations to ensure the planning yard is kept fully informed and for maintenance of the asset historical file.

b. The approval and routing actions are the same as listed in Part 1, Chapter 8, paragraph 8.3.7 of this volume with the User Activity performing the ship functions and the Sustaining Activity performing the Fleet Maintenance Activity functions.

c. Unless specifically delegated by the Program Manager and approved by the SCA, the Program Manager must approve all DFSs and obtain SCA concurrence.

8.2.6 Departure from Specification Approval and Reporting for DSSs While at Sea. The Commanding Officer or Officer in Charge will evaluate any DFS and approve the corrective action to be taken including any necessary restrictions.

a. The decision to continue manned operation of the DSS shall be made only after a careful review of the impact the deficiency will have on DSS personnel safety under all normal and emergency conditions. A report to the Program Manager via the chain of command will be made at the first opportunity.

b. As a minimum, the report shall contain a description of the condition as well as the intended actions. If continued operation of the DSS is intended, the report shall include a statement of impact on the ability of the system to operate safely, specifics and any required temporary local changes to the operating and emergency procedures made as a result of the deficiency and any imposed operating restrictions.

c. If the condition is not corrected during the next in-port period (i.e., a port with a fleet maintenance facility), it shall be forwarded as a DFS report for approval prior to the next manned use of the DSS.

(This Page Intentionally Left Blank)

VOLUME V

PART III

CHAPTER 9

AUDITS, SURVEILLANCE, EVALUATIONS, ASSESSMENTS AND SURVEYS

REFERENCES.

(a) SS800-AG-MAN-010/P-9290 - System Certification Procedures and Criteria Manual for Deep Submergence Systems
(b) NAVSEA SS521-AA-MAN-010 - U.S. Navy Diving and Manned Hyperbaric Systems Safety Certification Manual

9.1 PURPOSE. Provide requirements, procedures and criteria for audits, surveillance, evaluations and assessments for Scope of Certification (SOC) systems. The requirements of Part 1, Chapter 9 of this volume should be followed with the exception of the modified sections below.

9.2 RESPONSIBILITIES AND PROCEDURES.

9.2.1 User Activity Surveillance and Evaluation Program. The responsibilities and procedures listed for Ship's Force in Part I, Chapter 9, paragraph 9.3.1 of this volume should be used by the User Activity.

9.2.2 Sustaining Activity Audit, Surveillance and Evaluation Program. The responsibilities and procedures listed for Fleet Maintenance Activities in Part I, Chapter 9, paragraph 9.3.2 of this volume and reference (a) should be used by the Sustaining Activity with the modifications listed below.

a. Deep Submergence Systems (DSS) Sustaining Activities shall schedule and conduct an internal survey within 12 months of the last sustaining survey. A second internal survey shall be performed not more than 30 days prior to the next sustaining survey unless otherwise directed by the program SOC Notebook. Results of all internal surveys shall be forwarded to Naval Sea Systems Command (NAVSEA) for review.

NOTE: IF THE SYSTEM CERTIFICATION AUTHORITY (SCA) SURVEY PERIODICITY FOR THE DSS IS 15 MONTHS OR GREATER, THE SUSTAINING ACTIVITY SHALL PERFORM AT LEAST TWO INTERNAL SURVEYS BETWEEN THE SCA SURVEYS. THE SUSTAINING ACTIVITY SHALL COMPLETE THE FIRST INTERNAL SURVEY WITHIN 12 MONTHS OF THE LAST SUSTAINING SURVEY.

b. Results of audits and evaluations will be provided to the Commanding Officer or Officer in Charge.

9.2.3 Immediate Superiors In Command Assessments, Audits and Surveillance. The responsibilities and procedures listed for Immediate Superiors In Command (ISIC) in Part I, Chapter 9, paragraph 9.3.3 of this volume should be used with the modifications listed below.

a. ISICs shall schedule and conduct a Quality Assurance (QA) Program assessment of all assigned User and Sustaining Activities. SOC and Hull Inspection Procedures should be substituted for Submarine Safety and Unrestricted Operation/Maintenance Requirement Cards respectfully where specified.

b. ISICs will conduct the following additional periodic audits and surveillance:

(1) Conduct periodic monitoring of User Activity controlled work and QA program on all assigned DSSs during maintenance periods.

(a) Perform at least one surveillance during each refit/upkeep/fleet maintenance availability.

(b) Conduct monitoring during industrial availabilities.

(2) Conduct monitoring of assigned Sustaining Activity QA. This monitoring will include:

(a) Review of work procedures including opening and closing practices.

(b) Monitoring of in progress work both on tended ships and in Sustaining Activity work centers.

9.2.4 Type Commander Assessments. Type Commanders (TYCOM) should follow the guidance of reference (b) and Part 1, Chapter 9, paragraph 9.3.4 of this volume for assessments of ISICs associated with DSSs. The assessment will include a review of SOC controlled work packages.

9.3 SYSTEM CERTIFICATION AUTHORITY CERTIFICATION SURVEYS AND FUNCTIONAL AUDITS.

9.3.1 Certification Process. The below requirements define reference (a) certification processes for TYCOM Activities and is the process the SCA and NAVSEA Program Managers will use when certifying or auditing Fleet Deep Submergence System (DSS) Sustaining Activities. Surveys for Certification (Initial Certification), Reinstatement of Certification and Sustaining Certification (Sustaining Surveys) are performed by NAVSEA 07 as the SCA in accordance with reference (a). Functional Audits may be performed at the discretion of the SCA. TYCOM assessments performed in accordance with Part I, Chapter 9 of this volume meet Functional Audit requirements and shall be submitted, copy to the SCA, via the Program Manager.

9.3.2 Certification Survey Cards. SCA survey deficiencies noted during the survey and the recommended corrective action shall be documented in the form of certification survey cards.

9.3.2.1 Categorization of Certification Survey Cards. Survey cards for Certification or Functional audits of the DSS shall be categorized as follows:

a. Category IA. Findings of such importance that manned use of the system will not be authorized and certification will be withheld until the deficiencies are satisfactorily resolved. These deficiencies must be satisfactorily resolved and the resolutions accepted by the Program Manager and SCA to ensure the material condition of the DSS is verified as satisfactory prior to manned use.

b. Category IB. Findings which will allow manned use of the system for conduct of specific controlled evolutions, but will not allow issuance of the Letter of Certification until the deficiencies are satisfactorily resolved or required actions taken. These findings must be satisfactorily resolved and the resolutions accepted by the Program Manager and SCA to ensure the material condition of the system is verified as satisfactory for use prior to the issuance of the Letter of Certification.

c. Category IC. Findings of such importance that satisfactory resolution must be accomplished prior to a specific date or event specified on the survey card to sustain certification. These items must be satisfactorily resolved and the resolutions accepted by NAVSEA or be granted an extension approval from the SCA prior to the date or event specified in order to sustain certification.

d. Category II. Findings which, while not mandatory for resolution to obtain or maintain certification, identify systemic weaknesses in the DSS program. These deficiencies should be resolved in a timely manner.

e. Category III. Items audited and found acceptable.

9.3.2.2 Categorization of Functional Audit Cards. Survey cards for functional audits of the DSS activity shall be categorized as follows:

a. Certification. A non-compliance that affects or potentially affects the certification of a DSS; including a certified DSS. Resolution of a Certification item is mandatory prior to certifying DSS for manned operations.

b. Non-Compliance. Any violation of documented requirements (e.g., local, NAVSEA or higher-tier instructions, procedures, specifications or contracts).

c. Operational Improvements. A condition that while not a specific requirement violation, may cause a degradation in the effectiveness of the DSS program, or an observation expected to offer significant improvement in the effectiveness of the DSS program.

9.3.3 Administration of Survey/Audit Findings. Survey/audit findings shall be forwarded by official correspondence (i.e., letter). SCA surveys and Functional Audits of TYCOM activities will be forwarded from the Program Manager to the Sustaining Activity via the operational chain of command (i.e., via TYCOM and ISIC). Responses from the Sustaining Activity shall be forwarded to the SCA via the operational chain of command and the Program Manager. When a survey or audit identifies program deficiencies at a TYCOM Fleet Maintenance Activity the routing of the findings and responses shall be made via the assigned chain of command. Findings identified at NAVSEA managed activities or contractors will be forwarded as defined by the Program Manager, copy to the Sustaining Activity and the assigned chain of command. Category IA, Category IB and applicable Category IC findings affecting manned operations shall be acted on immediately by the activity surveyed or audited regardless of the status of the official correspondence. While the Program Manager is responsible for the management and tracking of Category IA, Category IB and Category IC survey items, the ISIC will also track status of all survey findings.

9.3.4 Administration of Surveys for Initial Certification or Reinstatement of Certification. Initial Certification surveys are performed for certification of a DSS during new construction or new acquisition. Surveys performed to reinstate certification are performed following a suspension, such as failure to perform a Sustaining Survey on time or due to an event that causes decertification, such as a casualty or a major availability. The NAVSEA Program Manager will suspend certification when a Sustaining Survey due date is exceeded, when a significant casualty occurs or when major repairs, work or modifications defined during a maintenance period would affect certification of the DSS. The SCA will reinstate system certification when the cause for the suspension/decertification has been thoroughly investigated, satisfactorily corrected or restored, and the material and procedural adequacy of the DSS has been reestablished. A Certification Survey Plan (CSP) specified by the Program Manager and approved by the SCA identifies all of the surveys and testing required to be met to fulfill the certification or reinstatement of certification requirements of the DSS. When the CSP requirements are met, the SCA will define certification for a specific period of time or identify when the next Sustaining Survey will be performed.

9.3.4.1 Actions to Support Surveys for Initial Certification or Reinstatement of Certification. Internal surveys for initial certification or reinstatement of certification following overhaul or major availabilities, are normally performed by the Maintenance Activity to support the SCA survey in accordance with the CSP. For all other reinstatement of certification scenarios the Sustaining Activity will submit a CSP tailored to ensure all SOC work and all operations performed since the last survey receive an adequate review to the Program Manager for approval by the SCA via the operational chain of command. The Program Manager, with SCA concurrence, will formally specify the requirements for reinstatement of certification. The following prerequisites have been established to ensure an activity is ready to support a certification survey:

a. For initial certification, 85 percent of SOC Re-Entry Control (REC) work must have been completed. Complete work means all work, testing and recertification associated with the document has been completed.

b. All SOC maintenance requirements must be current and, if requested, reports submitted to the SCA prior to the start of the survey.

c. All maintenance logs must reflect the current status of maintenance actions.

d. Deferred maintenance requirements must be appropriately approved and documented in accordance with existing documents.

e. At least 90 percent of the SOC portion of all strength and tightness tests shall be completed. All SOC operational tests and inspections which are possible to complete shall be complete. At-sea and manned testing is excluded from these requirements.

f. Provide a list of all open (unapproved or conditionally approved) Departures from Specification.

g. Sustaining Activity must obtain NAVSEA approval of an updated Certification Survey Plan at least two weeks prior to the SCA survey.

h. The activity's internal survey must be completed not more than 30 days prior to the SCA survey and the results of the internal survey must be submitted to NAVSEA at least 10 working days prior to the start of the SCA survey.

i. An updated copy of the activity's internal survey reflecting actions taken as a result of the finding shall be available to the SCA at the time of the SCA survey.

j. Key personnel must be present (Officer In Charge, Engineering Officer, etc.) to support the survey. It is also essential that qualified personnel knowledgeable in all aspects of the DSS be available and ready to assist the survey team.

9.3.4.2 Authorization of Operational Demonstration for Initial Certification or Reinstatement of Certification. These surveys support Builder's Trials or Sea Trials to complete the initial certification or reinstatement of certification per reference (a), section 3.7. Satisfactory completion of trials is mandatory to achieve final certification. Contingent upon the DSS material condition and status of findings of the survey, the SCA will normally authorize manned dockside testing and manned at-sea testing in pursuit of certification via the Program Manager to the TYCOM of the Sustaining Activity. The TYCOM will forward the SCA recommendations to the Sustaining Activity and authorize the applicable operations.

NOTE: MANNED USE OF THE DSS WILL NOT BE AUTHORIZED UNTIL THE SCA CERTIFIES TO THE SUSTAINING ACTIVITY VIA THE ASSIGNED TYCOM THAT THE SYSTEM IS CERTIFIED TO SUPPORT THE REQUIRED TESTING.

a. Survey findings will be formally forwarded to the Sustaining Activity via the operational chain of command and maintenance activity as applicable. The Sustaining Activity response will be provided to the SCA via the operational chain of command. Survey findings to allow manned operations will be processed as follows:

(1) When action identified by a specific card has been completed, a brief summary of the corrective action shall be written on the card and the card shall be signed by the Command responsible for the corrective action. All applicable Objective Quality Evidence documenting the corrective action taken shall be attached to the signed card, and forwarded to the SCA via the operational chain of command.

(2) Category IA, Category IB and applicable Category IC findings affecting manned operations, will be accepted by the SCA in accordance with reference (a). The Program Manager will provide copies of all completed survey cards to the Sustaining Activity via the TYCOM and/or ISIC, as applicable.

b. The User Activity or Sustaining Activity, as applicable, shall submit a trial schedule to operational chain of command for approval by the SCA via the Program Manager. Included shall be a description of general environmental considerations concerning safety (e.g., sea state limits, visibility limits, DSS handling capabilities, limits on diving under overhangs, cables, caves, etc.).

9.3.4.3 Certification/Reinstatement of Certification. Upon satisfactory completion of all testing identified by the CSP, and completion of all SCA/Program Manager actions specified to resolve any test deficiencies, the SCA will certify the DSS or reinstate certification of the DSS to the TYCOM via a Letter of Certification. TYCOM shall formally forward the Letter of Certification to the designated Sustaining Activity, copy to the operational chain of command, the Program Manager and the SCA.

9.3.5 Manned Use in Pursuit of Certification or Reinstatement of Certification.

a. When pursuing initial certification or reinstatement of certification there may be occasion where manned testing or training is required prior to conducting operational demonstration/trials testing. An assessment of items that could impact operator safety is necessary prior to conducting manned testing or training without obtaining formal SCA approval. The assessment shall be provided to the activity immediately senior to the User Activity for approval. A copy of the assessment shall be provided to the SCA, via the Program Manager, for information only, at least 24 hours prior to the evolution. If conducting testing or training at greater than one atmosphere, this section does not apply and formal SCA approval shall be obtained.

b. For manned testing with the DSS wet, the system will be tethered and in a pool, tethered to a certified lift system in port or in a certified captured lift system in port or at sea. Any other configuration while wet requires SCA approval prior to conducting the test. The following items must be assessed to support either wet or dry manned testing:

(1) Provide an impact assessment for any open Category IA survey cards.

(2) Identify any outstanding deficiencies that may impact testing/dives.

(3) Identify all open RECs and their impact on planned testing/dives.

(4) Ensure life support and communications system testing has been completed satisfactorily and are functioning properly.

(5) Ensure the results of the closed boat atmosphere analysis (bomb sample) are satisfactory.

(6) Ensure Operating Procedures/Emergency Procedures that will be used during the test/training, including pre-dive and post-dive procedures, have been updated to reflect new installations and system modifications.

(7) Ensure preventive maintenance procedures that will be used prior to and during the test/dive, have been updated to reflect new installations and system modifications.

(8) Ensure the safety analysis of new installations or modified systems that will be operated or tested during the dive has been evaluated by NAVSEA and that there are no hazards that impact planned tests/dives.

(9) Ensure electrical system testing (e.g., continuity, insulation resistance and ground checks) have been accomplished to the extent necessary to ensure electrical hazards do not exist to the operators.

c. For other than one atmosphere DSS systems, all manned testing or training conducted at other than one atmosphere requires SCA authorization.

9.3.6 Sustaining Certification Surveys. Sustaining Surveys conducted by the SCA are performed to verify that the DSS has been operated and maintained in the as-certified condition in accordance with the Letter of Certification. These surveys are granted for a specific time frame or are due on a specific date following initial certification or the last Sustaining Survey.

9.3.6.1 Scheduling. The Sustaining Survey shall be scheduled for completion before the survey due date on the Letter of Certification or the previous Sustaining Survey letter. The periodicity of Sustaining Surveys is negotiated between the Program Manager and the SCA, is based upon results of the last survey, with other oversight and performance indicators taken into account. The periodicity shall not be greater than that established in the DSSs Scope of Certification Notebook. If the SCA Sustaining Surveys occur more than 15 months apart, the Sustaining Activity shall perform at least two internal surveys between the SCA surveys, not to exceed 12 months apart. The Sustaining Activity is responsible for scheduling Sustaining Surveys with the SCA via the Program Manager and the ISIC and/or TYCOM (as applicable). If the Sustaining Survey cannot be conducted prior to the survey due date due to operational circumstances, and manned use is required, the Sustaining Activity shall submit a request for Continuation of Certification per section 9.3.7 of this chapter.

NOTE: IF THE SUSTAINING SURVEY DUE DATE IS EXCEEDED, MANNED OPERATIONS OF THE DSS SHALL BE SUSPENDED UNTIL AUTHORIZED BY THE SCA AND TYCOM (AS APPLICABLE).

9.3.6.2 Actions to Maintain Certification. Internal surveys are performed by the Sustaining Activity to support the SCA survey in accordance with the CSP. The Sustaining Activity will perform an internal survey of DSSs on an annual basis and prior to the sustaining survey in accordance with section 9.2.2 of this chapter. Copies of these internal surveys are to be forwarded to the SCA via the Program Manager and the ISIC and/or TYCOM (as applicable). The following prerequisites have been established to ensure an activity is ready to support a sustaining certification survey:

a. If the survey coincides with an availability with a duration of 30 days or less, 60 percent of SOC REC work must have been completed. If the availability is greater than 30 days, 85 percent of SOC REC work must have been completed. Complete work means all work, testing and recertification associated with the document has been completed. If the sustaining survey does not coincide with an availability, no work completion requirement exists, however, a complete list of all SOC work performed since the last survey will be provided to the SCA.

b. All SOC maintenance requirements must be current and, if requested, reports submitted to the SCA prior to the start of the survey.

c. All maintenance logs must reflect the current status of maintenance actions.

d. Deferred maintenance requirements must be appropriately approved and documented in accordance with existing documents.

e. If the survey coincides with an availability, at least 90 percent of the SOC portion of all strength and tightness tests shall be completed. All SOC operational tests and inspections which are possible to complete shall be complete. At-sea and manned testing is excluded from these requirements.

f. Provide a list of all open (unapproved or conditionally approved) Departures from Specification.

g. Sustaining Activity must obtain NAVSEA approval of an updated Certification Survey Plan at least two weeks prior to the SCA survey.

h. The activity's internal survey must be completed and the results submitted to NAVSEA at least two working days prior to the start of the SCA survey or as specified in the specific DSS SOC Notebook.

i. Key personnel must be present (Officer In Charge, Engineering Officer, etc.) to support the survey. It is also essential that qualified personnel knowledgeable in all aspects of the DSS be available and ready to assist the survey team.

j. Deficiencies noted during the survey and recommended corrective actions shall be documented in the form of certification survey cards.

9.3.6.3 Authorization for Manned Use Following a Sustaining Survey. Following formal reporting of the Sustaining Survey by the SCA, all Category IA, Category IB and applicable Category IC findings shall be completed and accepted by the SCA prior to continued manned operations. If no Category IA, Category IB or Category IC audit cards are generated by the survey, manned use of the DSS may continue with no reports. Upon completion of a Sustaining Survey, manned use can be continued if the following actions are completed:

a. All Category IA, Category IB and Category IC findings affecting manned operations with completed corrective actions shall be presented to the SCA via the chain of command as described previously in section 9.3.4.2.a(1) of this chapter.

b. Category IA, Category IB and Category IC findings affecting manned operations will be accepted by the SCA in accordance with reference (a). The Program Manager will provide copies of all completed survey cards to the Sustaining Activity via the TYCOM and/or ISIC, as applicable.

9.3.7 Continuation of Certification. If the Sustaining Survey cannot be conducted prior to the survey due date due to operational circumstances, and manned use is required, the Sustaining Activity shall submit a request for Continuation of Certification. The following actions are required:

a. At least six weeks prior to the expiration date of certification, the Sustaining Activity must submit an official request to NAVSEA via the operational chain of command for continuation of certification for a specific time period, and include written rationale for the continuation together with a status of maintenance and system condition.

b. NAVSEA may conduct on-site surveys to verify system material condition and ensure that existing certification requirements have been properly sustained.

c. The Sustaining Activity reports by message to NAVSEA, via the operational chain of command, completion of any Category IA, Category IB and applicable Category IC survey deficiencies affecting manned operations, as applicable.

d. The SCA grants continuation of certification to the Sustaining Activity, via the TYCOM for a specific period of time contingent on the overall DSS material condition. TYCOM will authorize the operations noting all required restrictions associated with the special case certification.

(This Page Intentionally Left Blank)

VOLUME V

PART III

CHAPTER 10

QUALITY ASSURANCE RECORDS

REFERENCES.

(a) NAVSEA SS800-AG-MAN-010/P-9290 - System Certification Procedures and Criteria Manual for Deep Submergence Systems
(b) NAVSEAINST 4720.23 - Deep Submergence Systems Temporary Modifications

10.1 PURPOSE. Provide record keeping and retention requirements for the Quality Assurance records used in the Scope of Certification Program per reference (a). The requirements of Part I, Chapter 10 of this volume apply as modified below.

10.2 DEPARTURE FROM SPECIFICATION RECORD RETENTION.

a. Each activity, Type Commander, Immediate Superior In Command, User Activity and Maintaining Activity is required to maintain an outstanding Departure From Specification (DFS) file. This file may be maintained on electronic media and will contain the following information:

(1) An index that reflects a Deep Submergence System unique identifier.

(2) Departure number.

(3) Departure title.

(4) Classification (Major or Minor).

(5) Type of Departure (Deviation or Waiver).

(6) Date requested.

(7) Date resolved.

(8) Approval or disapproval status.

(9) Conditional approval comments (if applicable).

(10) A copy of all applicable Naval Sea Systems Command correspondence delegating local approval of DFSs.

b. A copy of each outstanding DFS and all applicable correspondence.

c. A hard or electronic copy of cleared DFSs with an index will be retained for life of ship.

10.3 USER/SUSTAINING ACTIVITY QUALITY ASSURANCE RECORD RETENTION. User/Sustaining Activities will maintain records in accordance with record retention requirements of this volume Part 1, Chapter 10, Section 10.6 for Submarines, and Section 10.7 for Fleet Maintenance Activities.

10.3.1 Miscellaneous Records.

a. Completed maintenance records dive log, including where required, pre-dive and post-dive check-off procedures for all evolutions must be retained from certification survey to survey or three years, whichever is longer.

b. The marked up laminated pre-dive and post-dive sign off sheets which show valve and switch positions shall be retained until commencement of the next dive.

c. Records of gas supply certifications required by the applicable Scope of Certification Notebook shall be retained for three years.

d. Record of Temporary Modifications will be maintained per reference (b) and Volume II, Part I, Chapter 2 of this manual.

VOLUME V

PART III

CHAPTER 11

QUALITY ASSURANCE FORMS AND FORM INSTRUCTIONS

11.1 PURPOSE. Provide Quality Assurance (QA) forms for Scope of Certification items. Forms listed in Part 1, Chapter 11 of this volume should be used except for the QA-26 and QA-27 forms. Use the QA-26A and QA-27A forms listed in this chapter for Hydrostatic/Pneumatic Test Records and Drop Test Records respectively, and the QA form 34B listed in this chapter for the assembly of Electrical and Electronic Cable connector assemblies.

11.2 LIST OF FORMS. This chapter provides copies of the following QA forms with instructions on how to complete each form.

a. Instructions for QA form 2 for existing controlled material received from an outside vendor not under Joint Fleet Maintenance Manual controls.

b. QA form 26A - Hydrostatic/Pneumatic Test Record for Deep Submergence Systems.

Instructions for QA form 26A

c. QA form 27A - Drop Test Record for Deep Submergence Systems.

Instructions for QA form 27A

d. QA form 34B - Electrical/Electronic Cable Connector Assembly and Test Record.

Instructions for QA form 34B

(This Page Intentionally Left Blank)

QA FORM 2 INSTRUCTIONS

MATERIAL IDENTIFICATION (ID)/CONTROL TAG

LANTFLT 4790/2 (8-01) S/N 0103-LF-981-0300

PURPOSE: Used for receipt inspection, certification and traceability of existing controlled material received from an outside vendor not under Joint Fleet Maintenance Manual controls.

PROCEDURE: The numbered blocks on QA form 2 correspond with the instructions listed below.

BLOCK 1 - TAG (A) OF (B)

a. Block A - Enter "1". For additional tags used during the fabrication/transfer/installation process, number the tags in sequential order as used (2, 3, 4, etc.).

b. Block B - The last number reflects the total number of tags used for this item during this maintenance action. This block is filled in by the QAI at the time Block 21 is signed on the last tag (e.g., 3 of 3).

BLOCK 2 - MIC NO./SERIAL NO.

NOTE: THE INFORMATION ENTERED FOR FASTENERS MAY NEED TO INCLUDE INFORMATION FROM BLOCKS 3 AND 8 FROM QA-1. DO NOT ENTER THE PNSY TRACE NUMBER FROM BLOCK 3 OF THE QA-1.

a. New Material: Enter the Material Identification and Control (MIC) etched on the material. If the component has no MIC or a shortened MIC marking, ensure the full MIC marking from the shipping documents, tags, and/or packaging is entered.

b. Fasteners: Document the markings from the fastener to include either:

(1) The color code and the heat/lot number, material type, and manufacturer's symbol (for nuts containing a self-locking insert, the color of the insert is the manufacturer's symbol).

(2) The MIC number (when MIC number is on the fastener or on the individual tag for some small fasteners).

c. If the material is Material Control Division B, enter Markings on the material or documented on the shipping papers providing identification to material type or military specification.

BLOCK 3 - MAT LEVEL

Check the Existing block and the SOC block.

BLOCK 4 - MATL DESCRIPTION

Enter the quantity, size and noun name of the material (e.g., (6 each) 5/8" - 11 NICU studs, 10" O.D. CUNI barstock 6" long).

BLOCK 5 - NSN/SMIC

Enter "NA".

BLOCK 6 - RECEIPT INSPECTION COMMENTS

Enter receipt inspection results (i.e., SAT or UNSAT). If inspection results are UNSAT in Block 6, initiate a QA form 3. For UNSAT results in Block 6, the CMPO will only sign Block 7 of the QA form 2 if the QAO dispositions the item suitable for use on Block 12 of the QA form 3. For SAT receipt inspection, enter the following statement:

"Material Receipt Inspected SAT and is certified for re-use."

This entry will be signed by the QAO.

BLOCK 7 - CMPO/CMH

CMPO/CMH certifying the entries in Blocks 1-7 print name, enter signature and date.

NOTE 1: THE CMPO WILL VERIFY THAT THE ITEM IS WHAT IS REQUIRED FOR INTENDED USE PRIOR TO TURNING THE MATERIAL OVER TO CRAFTSMAN FOR FABRICATION AND/OR INSTALLATION AND FILL IN BLOCKS 8 THROUGH 12 AT THE TIME THE MATERIAL IS ISSUED.

BLOCK 8 - UIC, WC, JSN AND CWP SERIAL NO.

At the time of issue, enter the Job Control Number (JCN) [UIC, WC and Job Sequence Number (JSN)] and CWP serial number.

BLOCK 9 - WC NO.

Enter the number of the WC receiving material (e.g., EM01, 10C, 38A).

BLOCK 10 - DATE

Enter date the WC received the material.

BLOCK 11 - REMARKS

Enter the reason for issue (e.g., issued to 31A for manufacture of fitting, issued to EM01 for installation).

BLOCK 12 - CRAFTSMAN/CMPO/CMH/QAI

For Initial Material Issue: Print name, enter signature signifying issue of material by CMPO/CMH. For Fabrication/Transfer (Additional QA form(s) 2 required). Print name, enter signature signifying receipt of material.

NOTE: THE REMAINING SECTIONS OF THE TAG ARE COMPLETED BY THE COGNIZANT CRAFTSMAN/CMPO/CMH/QAI DURING THE FABRICATION/INSTALLATION PROCESSES.

NOTE: SATISFACTORY CONDITION OF MATERIAL EXCHANGED BETWEEN WCs IS ASSUMED, UNLESS AN ENTRY IS MADE IN REMARKS INDICATING MATERIAL IS REJECTED.

BLOCK 13 - WC NO.

Enter the number of the WC receiving material (e.g., 56A or EA01).

BLOCK 14 - DATE

Enter date material received.

BLOCK 15 - REMARKS

Record work performed while the material was in the custody of the WC (e.g., drilled screws and installed Nylock pellets).

BLOCK 16 - CRAFTSMAN/CMPO/CMH/QAI

Cognizant craftsman print name and sign to certify the above blocks are complete and correct.

NOTE: IF 2 OR MORE WCs ARE INVOLVED IN THE FABRICATION PROCESS, ADDITIONAL QA FORMS 2 WILL BE FILLED OUT AND NUMBERED IN ACCORDANCE WITH THE INSTRUCTIONS ABOVE FOR BLOCK 1.

NOTE: IF FOR ANY REASON THE COGNIZANT CRAFTSMAN REJECTS THE MATERIAL, HE/SHE WILL COMPLETE AND ATTACH A MATERIAL REJECT TAG (QA FORM 3) AND LEAVE THE QA FORM 2 ATTACHED.

NOTE: BLOCKS 17 THROUGH 21 WILL CONTAIN THE RECORD OF FINAL INSTALLATION. IF ADDITIONAL TAGS ARE REQUIRED FOR THE MATERIAL DURING THE FABRICATION AND TRANSFER PROCESS (MORE THAN TWO WCs/PROCESSES INVOLVED IN THE REPAIR), BLOCKS 9 THROUGH 12 AND BLOCKS 17 THROUGH 21 MAY BE USED.

BLOCK 17 - WC NO.

Enter the number of the WC responsible for installation of the material (e.g., 56A or EA01).

BLOCK 18 - DATE

Enter the date of installation.

BLOCK 19 - REMARKS

Enter the location where the material was installed into the system or component (e.g., installed in AHP-514, installed in system at joints ASW-70014(F) and ASW-70015(F), etc.).

BLOCK 20 - CRAFTSMAN

Cognizant craftsman print name and enter signature signifying that the material is the correct material, is installed correctly and in accordance with the applicable technical specifications. Remove the QA form 2 and file with the CWP if a QAI is not required.

NOTE: A QAI INSPECTION IS REQUIRED FOR MATERIAL INSTALLATIONS FOR JOINTS AND ASSEMBLIES WITHIN THE SOC BOUNDARY.

BLOCK 21 - INSPECTOR

When required, inspector print name and enter signature and date certifying that the material is the correct material, acceptable for application and correctly installed. Enter NA in QAI signature space when QAI is not required. Remove the QA form 2 and file with the CWP.

(This Page Intentionally Left Blank)

HYDROSTATIC/PNEUMATIC TEST RECORD FOR DEEP SUBMERGENCE SYSTEMS

QA FORM 26A (DSS) Planning shall fill in blocks identified by a ♦ prior to issuing

PAGE 1 OF 2

♦1. DSS PLATFORM	HULL NO.	♦2. JCN	♦3. LWC/SHOP	♦4. CWP/REC SER NO.	♦5. SYSTEM/COMPONENT

♦6. REFERENCES (TEST PRESSURE DRAWINGS, REFERENCE MANUALS OR OTHER APPLICABLE REFERENCES)

A.	B.	C.

♦**7. REQUIRED TEST AND INSPECTION –** SPECIFY TEST REQUIREMENTS [i.e., TYPE OF TEST, ACCEPTANCE CRITERIA, JOINTS TO BE TESTED (IF ENTIRE COMPONENT/SYSTEM IS TESTED, SO STATE)].

♦**8. DIAGRAM OF TEST AREA INCLUDING GAGS AND BLANKS INSTALLED, VALVE POSITIONS, AND TEST GAGES/INSTR USED (DOCUMENT BELOW OR ATTACH SKETCH).**

9. GAGE DATA	RANGE (PSIG)	SERIAL #	CAL DATE	CAL DUE DATE
PRIMARY				
BACKUP				

♦10. REQUIRED TEST FLUID:	♦11. REQUIRED TEST PRESSURE (PSIG):	12. ACTUAL TEST PRESSURE (PSIG):

♦13. REQUIRED TEST DURATION:	14. ACTUAL TEST DURATION:
♦15. ALLOWABLE LEAKAGE:	16. MEASURED LEAKAGE:
17. INSPECTION RESULTS (CHECK ONE):	☐ SAT ☐ UNSAT
18. OUT-OF-ROUNDNESS MEASUREMENTS (CHECK ONE): EXTERNAL HYDROSTATIC TEST OF PIPE ONLY	☐ SAT ☐ UNSAT ☐ NA

19. REMARKS:

20. CERTIFICATION

CERTIFICATION SIGNATURES SHALL BE MADE BY THE CRAFTSMAN WHO PERFORMED THE TEST AND THE QAI WHO WITNESSED THE TEST

PERFORMED BY		INSPECTED BY	
CRAFTSMAN SIGNATURE	**DATE (DATE TEST CONDUCTED)**	**QA INSPECTOR SIGNATURE**	**DATE**

HYDROSTATIC/PNEUMATIC TEST RECORD FOR DEEP SUBMERGENCE SYSTEMS
QA FORM 26A (DSS) (CONTINUATION SHEET)

DSS PLATFORM	HULL NO.	JCN	LWC/SHOP	CWP/REC SER NO.	SYSTEM/COMPONENT

21. VALVE/SYSTEM LINEUP FOR PRESSURE TESTING

◆VALVE/COMPONENT DESIGNATOR AND/OR NOMENCLATURE	◆REQUIRED POSITION/CONDITION	POSITIONER INITIALS	1ST CHECK INITIALS	2nd CHECK INITIALS

THE VALVE/SYSTEM LINEUP SHALL INCLUDE THE POSITION/CONDITION OF SYSTEM COMPONENTS WHICH COMPOSE THE TEST BOUNDARY; SYSTEM COMPONENTS WITHIN THE TEST BOUNDARY; TEMPORARY TEST FITTINGS, BLANKS AND JUMPERS INSTALLED IN THE SYSTEM FOR TESTING; AND THE TEST ENTRY POINT WHEN AN EXTERNAL PRESSURE SOURCE IS USED FOR AN INTERNAL PRESSURE TEST.

POSITIONER NAME (PRINT)	POSITIONER SIGNATURE	POSITIONER INITIALS	DATE
1st CHECK NAME (PRINT)	**1st CHECK SIGNATURE**	**1st CHECK INITIALS**	**DATE**
2ND CHECK NAME (PRINT)	**2nd CHECK SIGNATURE**	**2nd CHECK INITIALS**	**DATE**

QA FORM 26A INSTRUCTIONS

HYDROSTATIC/PNEUMATIC TEST RECORD

PURPOSE: To document hydrostatic/pneumatic tests accomplished on Scope of Certification piping systems or portions of a system to recertify the system after maintenance. It also provides a method for the Fleet Maintenance Activity to specify the required retests for work they performed.

PROCEDURE: The numbered blocks on QA form 26A correspond with the instructions listed below. Any block not used will be marked NA. The planning organization shall fill in blocks identified by a ◆ prior to issuing the Controlled Work Package (CWP).

BLOCK 1 - DSS Platform/Hull Number

Enter the Deep Submergence System (DSS) or ship's name and hull number.

BLOCK 2 - JCN

Enter the Joint Control Number (JCN).

BLOCK 3 - LWC

Enter the shop number of the Lead Work Center (LWC).

BLOCK 4 - CWP SER. NO.

Enter the CWP serial number.

BLOCK 5 - SYSTEM/COMPONENT

Enter the name of the system and component to be tested.

BLOCK 6 - TEST REFERENCES

Enter the applicable test reference and/or other applicable references (e.g., drawing number and revision used to obtain the required test pressure and conducting of the test).

NOTE: ENTER "S9505-AF-MMA-010/PIPING SYSTEMS" WHICH PROVIDES REQUIREMENTS FOR SHIP'S FORCE TO SET-UP AND CONDUCT TESTING.

BLOCK 7 - REQUIRED TEST AND INSPECTION POINTS

Enter the specific test requirements necessary to recertify the work. Specify test requirements (i.e., type of test, special valve position, duration, acceptance criteria, joints to be tested (if entire component/system is tested, so state)).

BLOCK 8 - DIAGRAM OF TEST AREA

Enter a diagram of the test area. Be specific. Include such things as relief valve locations, gage locations, blanks, gags, and valve positions, etc. The Quality Assurance Inspector (QAI) will verify the diagram prior to performance of the test. For nuclear tests identify major components to be isolated or vented to preclude unnecessary pressurization.

NOTE: ALL VALVES WITHIN THE TEST BOUNDARIES MUST BE IDENTIFIED AND THEIR POSITION (OPEN/SHUT) DURING THE TEST ANNOTATED.

NOTE: IF DRAWINGS OR ADDITIONAL INFORMATION IS REQUIRED TO SUPPLEMENT THIS REPORT, EACH DRAWING, ETC., WILL BE NUMBERED AND AUTHENTICATED WITH THE SIGNATURE BY THE CRAFTSMAN AND QAI MAKING UP THE REPORT.

NOTE: SHIPS, FLEET MAINTENANCE ACTIVITIES AND REGIONAL MAINTENANCE ACTIVITIES MANAGED BY FLEET FORCES COMMAND OR TYCOMS SHALL DISREGARD THE BLOCK 8 DIAMOND WHEN TESTING IS PERFORMED BY AN ACTIVITY OTHER THAN THE ACTIVITY PERFORMING REPAIR. THE ACTIVITY PERFORMING THE TESTING SHALL COMPLETE THE DIAGRAM REQUIRED BY BLOCK 8.

BLOCK 9 - GAGE DATA

Enter the Primary and backup gage data. Backup gage data is not required when performing an operational test as defined in Part I, Chapter 7 of this volume when a second system gage is not available.

BLOCK 10 - REQUIRED TEST FLUID

Enter the required test fluid.

BLOCK 11 - REQ'D TEST PRESSURE (PSIG)

Enter the required test pressure. If listing the value would classify the CWP then the symbols "J" or "H" with the applicable reference may be used instead of classifying the document.

BLOCK 12 - ACTUAL TEST PRESSURE (PSIG)

Enter the actual test pressure. If listing the value would classify the CWP then the symbols "J" or "H" with the applicable reference may be used instead of classifying the document.

BLOCK 13 - REQUIRED TEST DURATION

Enter the required test duration including units.

BLOCK 14 - ACTUAL TEST DURATION

Enter the actual test duration including units.

BLOCK 15 - ALLOWABLE LEAKAGE

Enter the allowable leakage including units for the leakage.

BLOCK 16 - MEASURED LEAKAGE

Enter the actual measured leakage including units for the leakage.

BLOCK 17 - INSPECTION RESULTS

a. Check "SAT" block, if all inspections specified by Block 7 are complete and satisfactory.

b. Check "UNSAT" block, if test results are unsatisfactory. Identify the specific inspection and reason for failure in the remarks section.

NOTE: IF A SATISFACTORY TEST CANNOT BE ACHIEVED, A DEPARTURE FROM SPECIFICATION FOR NON-NUCLEAR TESTS OR LIAISON ACTION REQUEST FOR NUCLEAR TESTS MUST BE PROCESSED IN ACCORDANCE WITH PART 1, CHAPTER 8 OF THIS VOLUME OR THE TASK MUST BE REWORKED AND RETESTED.

BLOCK 18 - OUT-OF-ROUNDNESS MEASUREMENTS

Enter out-of-roundness measurements for external hydrostatic tests of pipes only.

BLOCK 19 - REMARKS

Remarks pertinent to this test will be entered in this block.

BLOCK 20 - CERTIFICATION

PERFORMED BY

Person performing the test print name, enter signature and date signifying accuracy of data recorded.

INSPECTED BY

QAI print name, enter signature and date verifying the accuracy of test results recorded and inspection performed satisfactory.

BLOCK 21 - VALVE/SYSTEM LINEUP FOR PRESSURE TESTING

List all the valves within the test boundary and those valves that make up the test boundary. The required position for adequate testing of the component/system will be listed. Each valve will have the initials of the initial positioner, or in the event the valve is in the correct position and does not require positioning "NA" will be marked. Each valve will have 1st and 2nd checkers initials. Personnel involved with initial positioning, 1st and 2nd checking will print their names, sign, initial and date the required blocks at the bottom of the form.

NOTE: SHIPS, FLEET MAINTENANCE ACTIVITIES AND REGIONAL MAINTENANCE ACTIVITIES MANAGED BY FLEET FORCES COMMAND OR TYCOMS SHALL DISREGARD THE BLOCK 21 DIAMOND WHEN TESTING IS PERFORMED BY AN ACTIVITY OTHER THAN THE ACTIVITY PERFORMING REPAIR. THE ACTIVITY PERFORMING THE TESTING SHALL COMPLETE THE VALVE LINEUP REQUIRED BY BLOCK 21.

(This Page Intentionally Left Blank)

DROP TEST RECORD FOR DEEP SUBMERGENCE SYSTEMS
QA FORM 27A (DSS)

PAGE 1 OF 2

1. DSS PLATFORM HULL NO.	2. JCN	3. LWC/SHOP	4. CWP/REC SER NO.	5. SYSTEM/COMPONENT

6. REFERENCES (TEST REFERENCE MANUAL(S) AND/OR OTHER APPLICABLE REFERENCES)

A.	B.	C.

7. REQUIRED TEST AND INSPECTION – SPECIFY TEST REQUIREMENTS [i.e., TYPE OF TEST, JOINTS TO BE TESTED (IF ENTIRE COMPONENT/SYSTEM IS TESTED, SO STATE)].

8. DIAGRAM OF TEST AREA INCLUDING GAGS AND BLANKS INSTALLED, VALVE POSITIONS, AND TEST GAGES/INSTR USED (DOCUMENT BELOW OR ATTACH SKETCH).

9. GAGE DATA	RANGE (PSIG)	SERIAL #	CAL DATE	CAL DUE DATE
PRIMARY				
BACKUP				

10. REQUIRED TEST FLUID:

11. REQUIRED TEST PRESSURE:	**12. INITIAL TEST PRESSURE:**	**13. FINAL PRESSURE AT END OF TEST:**
14. TEMPERATURE AT START OF TEST:	**15. TEMPERATURE AT END OF TEST:**	**16. CHANGE IN TEMPERATURE:**

17. REQUIRED TEST DURATION:	**18. ACTUAL TEST DURATION:**
19. ALLOWABLE PRESSURE DROP% IN MINUTES/HOURS:	**20. FINAL PRESSURE DROP CORRECTED FOR TEMPERATURE CHANGE:**

21. TEST RESULTS (CHECK ONE): ☐ SAT ☐ UNSAT

22. REMARKS:

23. CERTIFICATION

CERTIFICATION SIGNATURES SHALL BE MADE BY THE CRAFTSMAN WHO PERFORMED THE TEST AND THE QAI WHO WITNESSED THE TEST

PERFORMED BY:	INSPECTED BY:
CRAFTSMAN SIGNATURE DATE	QA INSPECTOR SIGNATURE DATE

DROP TEST RECORD FOR DEEP SUBMERGENCE SYSTEMS
QA FORM 27A (DSS) (CONTINUATION SHEET)

DSS PLATFORM	HULL NO.	JCN	LWC/SHOP	CWP/REC SER NO.	SYSTEM/COMPONENT

24. VALVE/SYSTEM LINEUP FOR PRESSURE TESTING

VALVE/COMPONENT DESIGNATOR AND/OR NOMENCLATURE	REQUIRED POSITION/CONDITION	POSITIONER	1ST CHECK	2nd CHECK
		INITIALS	INITIALS	INITIALS

THE VALVE/SYSTEM LINEUP SHALL INCLUDE THE POSITION/CONDITION OF SYSTEM COMPONENTS WHICH COMPOSE THE TEST BOUNDARY, SYSTEM COMPONENTS WITHIN THE TEST BOUNDARY, TEMPORARY TEST FITTINGS, BLANKS AND JUMPERS INSTALLED IN THE SYSTEM FOR TESTING AND THE TEST ENTRY POINT WHEN AN EXTERNAL PRESSURE SOURCE IS USED FOR AN INTERNAL PRESSURE TEST.

POSITIONER NAME (PRINT)	POSITIONER SIGNATURE	POSITIONER INITIALS	DATE
1st CHECK NAME (PRINT)	**1st CHECK SIGNATURE**	**1st CHECK INITIALS**	**DATE**
2nd CHECK NAME (PRINT)	**2nd CHECK SIGNATURE**	**2nd CHECK INITIALS**	**DATE**

QA FORM 27A INSTRUCTIONS

DROP TEST RECORD

PURPOSE: To document drop tests accomplished on Scope of Certification piping systems or portions of a system to recertify the system after maintenance actions have been accomplished.

PROCEDURE: The numbered blocks on QA form 27A correspond with the instructions listed below. Any block not used will be marked NA. The planning organization shall fill in Blocks 1 through 7, 10, 11, 17 and 19 prior to issuing the CWP.

BLOCK 1 - DSS Platform/Hull Number

Enter the DSS or ship's name and hull number.

BLOCK 2 - JCN

Enter the JCN.

BLOCK 3 - LWC

Enter the shop number of the LWC.

BLOCK 4 - CWP SER. NO.

Enter the CWP serial number.

BLOCK 5 - SYSTEM/COMPONENT

Enter the name of the system and component to be tested.

BLOCK 6 - TEST REFERENCES

Enter the applicable test reference and/or other applicable references (e.g., drawing number and revision used to obtain the required test pressure and conducting of the test).

NOTE: ENTER "S9505-AF-MMA-010/PIPING SYSTEMS" WHICH PROVIDES REQUIREMENTS FOR SHIP'S FORCE TO SET-UP AND CONDUCT TESTING.

BLOCK 7 - REQUIRED TEST AND INSPECTION POINTS

Enter the specific test requirements necessary to recertify the work. Specify test requirements (i.e., type of test, special valve position, duration, acceptance criteria, and joints to be tested (if entire component/system is tested, so state)).

BLOCK 8 - DIAGRAM OF TEST AREA

Enter a diagram of the test area. Be specific. Include such things as relief valve locations, gage locations, blanks, gags, and valve positions, etc. The QAI will verify the diagram prior to performance of the test. For nuclear tests identify major components to be isolated or vented to preclude unnecessary pressurization.

NOTE: ALL VALVES WITHIN THE TEST BOUNDARIES MUST BE IDENTIFIED AND THEIR POSITION (OPEN/SHUT) DURING THE TEST ANNOTATED.

BLOCK 9 - GAGE DATA

Enter the Primary and backup gage data. Backup gage data is not required when performing an operational test as defined in Part I, Chapter 7 of this volume when a second system gage is not available.

BLOCK 10 - REQUIRED TEST FLUID

Enter the required test fluid.

BLOCK 11 - REQ'D TEST PRESSURE (PSIG)

Enter the required test pressure. If listing the value would classify the CWP then the symbols "J" or "H" with the applicable reference may be used instead of classifying the document.

BLOCK 12 - INITIAL TEST PRESSURE

Enter initial test pressure achieved at start of test.

BLOCK 13 - FINAL PRESSURE AT END OF TEST

Record final pressure reading when the required test time is completed.

BLOCK 14 - TEMPERATURE AT START OF TEST

Record temperature at start of the test with units.

BLOCK 15 - TEMPERATURE AT END OF TEST

Record temperature at the end of the test with units.

BLOCK 16 - CHANGE IN TEMPERATURE

Subtract temperature at the end of the test recorded in Block 15 from temperature at the start of the test recorded in Block 14.

BLOCK 17 - REQUIRED TEST DURATION

Enter the required test duration including units.

BLOCK 18 - ACTUAL TEST DURATION

Record actual duration of the test.

BLOCK 19 - ALLOWABLE PRESSURE DROP % IN MINUTES/HOURS

Enter the allowable pressure drop as a percentage of the test pressure in minutes or hours. Cross-out time measure not used.

BLOCK 20 - FINAL PRESSURE DROP CORRECTED FOR TEMPERATURE CHANGE

Record final pressure drop calculated with corrections for temperature change in the same units as Blocks 11 and 12.

BLOCK 21 - TEST RESULTS

a. Check "SAT" block if all inspections specified by Block 7 are complete and satisfactory.

b. Check "UNSAT" block, if test results are unsatisfactory. Identify the specific inspection and reason for failure in the remarks section.

NOTE: IF A SATISFACTORY TEST CANNOT BE ACHIEVED, A DEPARTURE FROM SPECIFICATION MUST BE PROCESSED IN ACCORDANCE WITH PART 1, CHAPTER 8, OF THIS VOLUME OR THE TASK MUST BE REWORKED AND RETESTED.

BLOCK 22 - REMARKS

Remarks pertinent to this test will be entered in this block.

BLOCK 23 - CERTIFICATION

PERFORMED BY

Person performing the test print name, enter signature and date signifying accuracy of data recorded.

INSPECTED BY

QAI print name, enter signature and date verifying the accuracy of test results recorded and inspection performed satisfactory.

BLOCK 24 - VALVE/SYSTEM LINEUP FOR PRESSURE TESTING

List all the valves within the test boundary and those valves that make up the test boundary. The required position for adequate testing of the component/system will be listed. Each valve will have the initials of the initial positioner, or in the event the valve is in the correct position and does not require positioning "NA" will be marked. Each valve will have 1st and 2nd checkers initials. Personnel involved with initial positioning, 1st and 2nd checking will print their names, sign, initial and date the required blocks at the bottom of the form.

(This Page Intentionally Left Blank)

ELECTRICAL/ELECTRONIC CABLE CONNECTOR ASSEMBLY AND TEST RECORD

QA FORM 34B (DSS)

A separate QA Form 34B must be used for each connector requiring controlled assembly documentation. The QA Form 34B shall be used to provide: 1) Stand alone documentation for cable connector reconnection when controlled assembly is required by authorized REC exception; or 2) QA Form 34B will be included in CWP/REC packages when documentation of controlled assembly is required as OQE for the work performed.

*1. DSS PLATFORM	HULL NO.	*2. JCN	*3. LWC/SHOP	*4. CWP/REC SER NO.	*5. SYSTEM(S) COMPONENT

*6. CONNECTOR DESIGNATION	*7. CABLE DESIGNATION	*8. CONNECTOR SIZE

*9. REFERENCES

A. TORQUE		B. INSPECTION		C. RETEST	

10. MATERIALS

PC NO.	REF.	DESCRIPTION	QTY	LOE	IDENT (e.g., MIC NO/NSN/TRACEABILITY NO)	R/I

11. INSPECTION (REFERENCE 9.B.)

PINS		SEALING SURFACES * [ ] NOT APPLICABLE			THREADS * [ ] NOT APPLICABLE			REMARKS
PLUG	JACK	PLUG	JACK	VENT SCREW	PLUG	JACK	VENT SCREW	
SAT_____ UNSAT____	SAT_____ UNSAT____	SAT_____ UNSAT____	SAT_____ UNSAT____	SAT_____ UNSAT____	SAT_____ UNSAT____	SAT_____ UNSAT____	SAT_____ UNSAT____	

12. TORQUE DOCUMENTATION (REFERENCE 9.A) * [ ] TORQUE DOCUMENTATION NOT REQUIRED

	*REQUIRED TORQUE	FINAL TORQUE	TORQUE DEVICE/INSTRUMENT USED		
			RANGE	SERIAL NUMBER	CAL DUE DATE
VENT SCREW * [ ] NOT APPLICABLE	☐ IN-LB ☐ FT-LB	☐ IN-LB ☐ FT-LB	☐ IN-LB ☐ FT-LB		
COUPLING RING	*REQUIRED TORQUE	FINAL TORQUE	TORQUE DEVICE/INSTRUMENT USED		
			RANGE	SERIAL NUMBER	CAL DUE DATE
	☐ IN-LB ☐ FT-LB	☐ IN-LB ☐ FT-LB	☐ IN-LB ☐ FT-LB		

CRAFTSMAN SIGNATURE	DATE	QAI SIGNATURE	DATE

13. LOCKWIRE/LOCKING CABLE INSTALLATION	CRAFTSMAN SIGNATURE	DATE
SAT_____ * NOT APPLICABLE_____		

14. REMARKS/RECORD OF REPAIRS, MODIFICATIONS, INSPECTIONS (e.g., LIST OF ASSOCIATED RECORDS)

15. RECORD HAS BEEN REVIEWED FOR COMPLETENESS	QAS SIGNATURE	DATE

(This Page Intentionally Left Blank)

QA FORM 34B INSTRUCTIONS

ELECTRICAL/ELECTRONIC CABLE CONNECTOR ASSEMBLY AND TEST RECORD

PURPOSE: To provide a standard form to document the assembly and test of Scope of Certification electrical and electronic cable connector assemblies.

PROCEDURE: The numbered blocks on QA form 34B correspond with instructions listed below. Any block not used will be marked N/A. The planning organization shall fill in blocks identified by a * prior to issuing the CWP.

BLOCK 1 - DSS PLATFORM/HULL NO.

Enter the DSS or ship's name and hull number.

BLOCK 2 - JCN

Enter the JCN.

BLOCK 3 - LWC

Enter the LWC.

BLOCK 4 - CWP/REC SER. NO.

Enter the CWP serial number.

BLOCK 5 - SYSTEM(S)/COMPONENT

Enter the noun name of the system(s) and component (if applicable).

BLOCK 6 - CONNECTOR DESIGNATION

Enter the designation of the connector as listed on prints or other reference material.

BLOCK 7 - CABLE DESIGNATION

Enter the designation of the cables entering the connector as listed on prints or other reference material.

BLOCK 8 - CONNECTOR SIZE

Enter the connector size.

BLOCK 9 - REFERENCES

Enter all references used to identify component parts, joint, material, and assembly information. Include revision letter and, if applicable, the assembly number (e.g., Assy D, Assy RA, etc.). Revisions for technical manuals are not required. If joint numbers are assigned in a sketch in a Work Procedure, include the Work Procedure sketch number. For Electrical Hull Fittings, include both the assembly drawing and electrical hole assignment drawing.

BLOCK 10 - MATERIALS

NOTE: ALL NEW MATERIAL MUST BE ENTERED IN BLOCK 10.

PC NO: Enter piece numbers of parts. List only the new replacement parts actually being installed.

REF: Record the reference letter of the drawing or document listed in Block 9 which provides the material specification or assembly information for the piece listed in the "PC NO." block.

DESCRIPTION: Describe all new parts associated with the assembly or joint. For O-rings: record the MIL SPEC and the size. Enter the stock number of the O-ring lubricant or any sealant used during assembly.

QTY: Record quantity of new material installed.

LOE: Identify the Level of Essentiality (MIC Level). Example: SS, L1, NA. For SOC material, enter the appropriate Material Control Division (A, B or C).

IDENT: Record the National Stock Number or traceability number of the new materials that were used.

R/I (Receipt Inspection): Enter receipt inspection results from the QA form 2 (SAT). For non-controlled material enter "N/A". For SOC MCD C material, the craftsman will perform a receipt inspection per Part III Chapter 6 of this volume and document the inspection results in the R/I column of Block 10.

BLOCK 11 - INSPECTION

PINS: Record "SAT" or "UNSAT" for the plug and jack inspection using requirements of the references listed in Block 9.

SEALING SURFACE: Record "SAT" or "UNSAT" for the sealing surface inspection using requirements of the references listed in Block 9. If the sealing surface is not required to be checked, mark the "NOT APPLICABLE" block.

THREADS: Record "SAT" or "UNSAT" for the fastening thread inspection using requirements of the references listed in Block 9. If the thread inspection is not required to be checked, mark the "NOT APPLICABLE" block.

BLOCK 12 - TORQUE DOCUMENTATION

Not all electrical/electronic cable connectors require torque documentation. For those joints not requiring torque documentation, mark the "NOT APPLICABLE" block. The craftsman will still sign indicating that the joint was assembled in accordance with specification and the correct O-ring was used.

For those electrical/electronic cable connectors which require torque documentation:

REQUIRED TORQUE: The Planner will list the required torque for the vent screw and coupling ring as applicable in accordance with the requirements of the reference(s) listed in Block 9.

FINAL TORQUE: The craftsman will record the final torque applied to the vent screw and/or coupling ring.

TORQUE DEVICE DATA: Record range, serial number and calibration due date for the torque wrench or other device used during the assembly of the connector.

CRAFTSMAN(S) CERTIFICATION BLOCK FOR JOINT DATA: Craftsman(s) shall sign, record badge number and date of the signature after the satisfactory completion of assembly in accordance with the requirements. This signature provides certification that the joint meets the requirements for the following:

(1) The applied lubricant is acceptable per the technical direction.

(2) The final required pre-load torque has been applied in accordance with specified requirements.

(3) Sealing surfaces meet the acceptance criteria of the applicable Maintenance Standard.

QAI CERTIFICATION BLOCK FOR JOINT DATA: QAI shall sign and date the signature after the satisfactory completion of assembly in accordance with the requirements. This signature provides certification that the joint meets the requirements for the following:

(1) The applied lubricant is acceptable per the technical direction.

(2) The final required pre-load torque has been applied in accordance with specified requirements.

(3) Sealing surfaces meet the acceptance criteria of the applicable Maintenance Standard.

BLOCK 13 - LOCKWIRE/LOCKING CABLE/DEVICE INSTALLATION

Planning directions: This block applies to locking devices other than self-locking nuts or self-locking bolts/cap screws. Enter an X in the NA box when not applicable.

Craftsman directions: Check the "SAT" box and sign and date when lockwire, locking cable or required locking device (e.g., locking ring for Electrical Hull Fittings (EHF), barrel nut locking device, etc.) has been properly installed. Enter description (e.g., lockwire, locking cable, locktab) and identification (e.g., stock number) of the lockwire/locking cable/locking device.

BLOCK 14 - REMARKS/RECORD OF REPAIRS/MODIFICATIONS/INSPECTIONS

Enter any pertinent remarks or additional information related to the repair/assembly of the component. Each entry shall contain a signature and date except where the entry is pre-printed on the form by planning.

BLOCK 15 - RECORD HAS BEEN REVIEWED FOR COMPLETENESS

Quality Assurance Supervisor or Quality Assurance Officer will print name, enter signature and date for final review, signifying the accuracy of the completed form. If any entry is UNSAT, the Quality Assurance Officer will initiate action to resolve the unsat condition and indicate the action taken in the remarks block. Do not sign unless a satisfactory repair is completed or the UNSAT condition is accepted.

(This Page Intentionally Left Blank)